For New Technology Network

NTN®

NTN corporation

LARGE BEARINGS

CAT. NO. 2250-Ⅳ/E

CONTENTS

Technical Data		A- 5
Deep Groove Ball Bearings	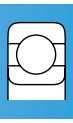	B- 5
Angular Contact Ball Bearings		B- 15
Cylindrical Roller Bearings	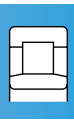	B- 37
Tapered Roller Bearings		B- 89
Spherical Roller Bearings		B-203
Thrust Bearings		B-227
Bearings for Special Applications		C- 1
Catalog List & Appendix Table		D- 1

Warranty

NTN warrants, to the original purchaser only, that the delivered product which is the subject of this sale (a) will conform to drawings and specifications mutually established in writing as applicable to the contract, and (b) be free from defects in material or fabrication. The duration of this warranty is one year from date of delivery. If the buyer discovers within this period a failure of the product to conform to drawings or specifications, or a defect in material or fabrication, it must promptly notify **NTN** in writing. In no event shall such notification be received by **NTN** later than 13 months from the date of delivery. Within a reasonable time after such notification, **NTN** will, at its option, (a) correct any failure of the product to conform to drawings, specifications or any defect in material or workmanship, with either replacement or repair of the product, or (b) refund, in part or in whole, the purchase price. Such replacement and repair, excluding charges for labor, is at **NTN**'s expense. All warranty service will be performed at service centers designated by **NTN**. These remedies are the purchaser's exclusive remedies for breach of warranty.

NTN does not warrant (a) any product, components or parts not manufactured by **NTN**, (b) defects caused by failure to provide a suitable installation environment for the product, (c) damage caused by use of the product for purposes other than those for which it was designed, (d) damage caused by disasters such as fire, flood, wind, and lightning, (e) damage caused by unauthorized attachments or modification, (f) damage during shipment, or (g) any other abuse or misuse by the purchaser.

THE FOREGOING WARRANTIES ARE IN LIEU OF ALL OTHER WARRANTIES, EXPRESS OR IMPLIED, INCLUDING BUT NOT LIMITED TO THE IMPLIED WARRANTIES OF MERCHANTABILITY AND FITNESS FOR A PARTICULAR PURPOSE.

In no case shall **NTN** be liable for any special, incidental, or consequential damages based upon breach of warranty, breach of contract, negligence, strict tort, or any other legal theory,and in no case shall total liability of **NTN** exceed the purchase price of the part upon which such liability is based. Such damages include, but are not limited to, loss of profits, loss of savings or revenue, loss of use of the product or any associated equipment, cost of capital, cost of any substitute equipment, facilities or services, downtime, the claims of third parties including customers, and injury to property. Some states do not allow limits on warranties, or on remedies for breach in certain transactions. In such states, the limits in this paragraph and in paragraph (2) shall apply to the extent allowable under case law and statutes in such states.

Any action for breach of warranty or any other legal theory must be commenced within 15 months following delivery of the goods.

Unless modified in a writing signed by both parties, this agreement is understood to be the complete and exclusive agreement between the parties, superceding all prior agreements, oral or written, and all other communications between the parties relating to the subject matter of this agreement. No employee of **NTN** or any other party is authorized to make any warranty in addition to those made in this agreement.

This agreement allocates the risks of product failure between **NTN** and the purchaser. This allocation is recognized by both parties and is reflected in the price of the goods. The purchaser acknowledges that it has read this agreement, understands it, and is bound by its terms.

© **NTN** Corporation. 2007
Although care has been taken to assure the accuracy of the data compiled in this catalog, **NTN** does not assume any liability to any company or person for errors or omissions.

NTN

LARGE BEARINGS

TECHNICAL DATA CONTENTS

1. Load Rating and Life ····· A- 5
- 1.1 Bearing life ····· A- 5
- 1.2 Basic rated life and basic dynamic load rating ····· A- 5
- 1.3 Adjusted life rating factor ····· A- 6
- 1.4 Basic static load rating ····· A- 7
- 1.5 Allowable static equivalent load ····· A- 7

2. Bearing Load Calculation ····· A- 8
- 2.1 Load acting on shafts ····· A- 8
- 2.2 Mean load ····· A- 8
- 2.3 Equivalent load ····· A- 9

3. Bearing Tolerances ····· A-11
- 3.1 Dimensional accuracy and running accuracy ····· A-11
- 3.2 Limits and tolerances for chamfer and tapered bore ····· A-20

4. Bearing Fits ····· A-22
- 4.1 Interference ····· A-22
- 4.2 The necessity of a proper fit ····· A-22
- 4.3 Fit selection ····· A-22

5. Bearing Internal Clearance ····· A-29
- 5.1 Bearing internal clearance ····· A-29
- 5.2 Internal clearance selection ····· A-29

6. Lubrication ····· A-38
- 6.1 Lubrication of rolling bearings ····· A-38
- 6.2 Characteristics of grease and oil lubrication ····· A-38
- 6.3 Grease lubrication ····· A-38
- 6.4 Solid Grease (for bearings with solid grease lubricant) ····· A-41
- 6.5 Oil lubrication ····· A-42

7. Bearing Materials ····· A-45
- 7.1 Raceway and rolling element materials ····· A-45
- 7.2 Cage materials ····· A-45

1. Load Rating and Life

1.1 Bearing life

Even in bearings operating under normal conditions, the surfaces of the raceway and rolling elements are constantly being subjected to repeated compressive stresses which cause flaking of these surfaces to occur. This flaking is due to material fatigue and will eventually cause the bearings to fail. The effective life of a bearing is usually defined in terms of the total number of revolutions a bearing can undergo before flaking of either the raceway surface or the rolling element surfaces occurs.

Other causes of bearing failure are often attributed to problems such as seizing, abrasions, cracking, chipping, gnawing, rust, etc. However, these so called "causes" of bearing failure are usually themselves caused by improper installation, insufficient or improper lubrication, faulty sealing or inaccurate bearing selection. Since the above mentioned "causes" of bearing failure can be avoided by taking the proper precautions, and are not simply caused by material fatigue, they are considered separately from the flaking aspect.

1.2 Basic rated life and basic dynamic load rating

A group of seemingly identical bearings when subjected to identical load and operating conditions will exhibit a wide diversity in their durability.

This "life" disparity can be accounted for by the difference in the fatigue of the bearing material itself. This disparity is considered statistically when calculating bearing life, and the basic rated life is defined as follows.

The basic rated life is based on a 90% statistical model which is expressed as the total number of revolutions 90% of the bearings in an identical group of bearings subjected to identical operating conditions will attain or surpass before flaking due to material fatigue occurs. For bearings operating at fixed constant speeds, the basic rated life (90% reliability) is expressed in the total number of hours of operation.

The basic dynamic load rating is an expression of the load capacity of a bearing based on a constant load which the bearing can sustain for one million revolutions (the basic life rating). For radial bearings this rating applies to pure radial loads, and for thrust bearings it refers to pure axial loads. The basic dynamic load ratings given in the bearing tables of this catalog are for bearings constructed of **NTN** standard bearing materials, using standard manufacturing techniques. Please consult **NTN** Engineering for basic load ratings of bearings constructed of special materials or using special manufacturing techniques.

The relationship between the basic rated life, the basic dynamic load rating and the bearing load is given in formula (1.1).

$$L_{10} = \left(\frac{C}{P}\right)^{p} \cdots\cdots\cdots\cdots (1.1)$$

where,

p= 3.....For ball bearings

p= 10/3.....For roller bearings

L_{10}: Basic rated life 10^6 revolutions

C : Basic dynamic rated load, N
(C_r: radial bearings, C_a: thrust bearings)

P : Equivalent dynamic load, N
(P_r: radial bearings, P_a: thrust bearings)

The basic rated life can also be expressed in terms of hours of operation (revolution), and is calculated as shown in formula (1.2).

$$L_{10h} = 500 f_h^{\,p} \cdots\cdots\cdots\cdots (1.2)$$

$$f_h = f_n \frac{C}{P} \cdots\cdots\cdots\cdots (1.3)$$

$$f_n = \left(\frac{33.3}{n}\right)^{1/p} \cdots\cdots\cdots (1.4)$$

where,

L_{10h} : Basic rated life, h

f_h : Life factor

f_n : Speed factor

n : Shaft speed, min^{-1}

Formula (1.2) can also be expressed as shown in formula (1.5).

$$L_{10h} = \frac{10^6}{60n} \left(\frac{C}{P}\right)^{p} \cdots (1.5)$$

The relationship between Rotational speed n and speed factor f_n as well as the relation between the basic rated life L_{10h} and the life factor f_n is shown in **Fig. 1.1**.

When several bearings are incorporated in machines or equipment as complete units, all the bearings in the unit are considered as a whole when computing bearing life (see formula 1.6). The total bearing life of the unit is a life rating based on the viable lifetime of the unit before even one of the bearings fails due to rolling contact fatigue.

$$L = \frac{1}{\left(\frac{1}{L_1^{\,e}} + \frac{1}{L_2^{\,e}} + \cdots \frac{1}{L_n^{\,e}}\right)^{1/e}} \cdots\cdots\cdots (1.6)$$

where,

e = 10/9.....For ball bearings

e = 9/8.....For roller bearings

L : Total basic rated life of entire unit, h

$L_1 \cdot L_2 \cdots L_n$: Basic rated life of individual bearings, 1, 2, ⋯n, h

When the load conditions vary at regular intervals, the life can be given by formula (1.7).

$$L_m = (\Sigma \Phi_j / L_j)^{-1} \cdots\cdots\cdots\cdots (1.7)$$

where,

Φ_j : Frequency of individual load conditions

L_j : Life under individual conditions

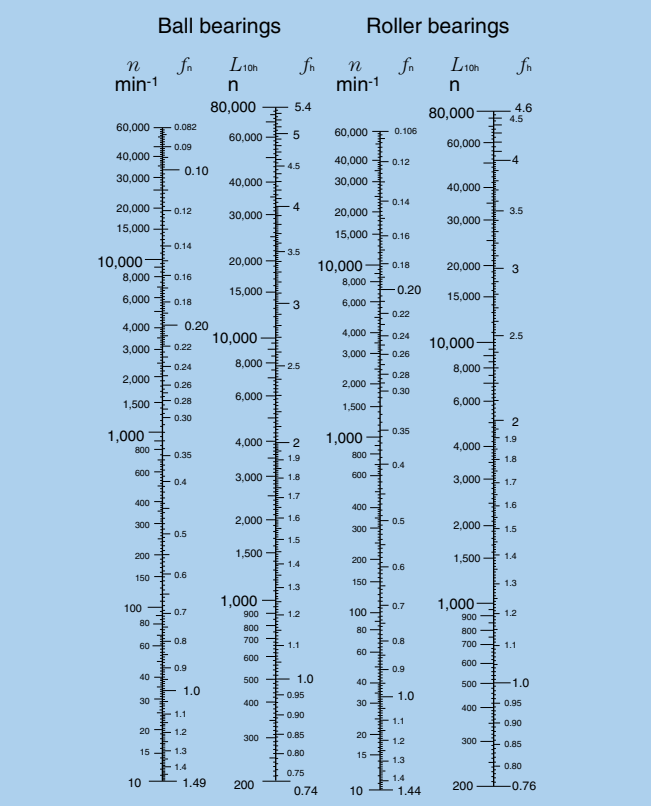

Fig. 1.1 Bearing life rating scale

1.3 Adjusted life rating factor

The basic bearing life rating (90% reliability factor) can be calculated through the formulas mentioned earlier in Section 1.2. However, in some applications a bearing life factor of over 90% reliability may be required. To meet these requirements, bearing life can be lengthened by the use of specially improved bearing materials or special construction techniques. Moreover, according to elastohydrodynamic lubrication theory, it is clear that the bearing operating conditions (lubrication, temperature, shaft speed, etc.) all exert an effect on bearing life. All these adjustment factors are taken into consideration when calculating bearing life, and using the life adjustment factor as prescribed in ISO 281, the adjusted bearing life can be determined.

$$L_{na} = a_1 \cdot a_2 \cdot a_3 \cdot (C/P)^p \cdots (1.8)$$

where,

L_{na} : Adjusted life rating in millions of revolutions (10^6)(adjusted for reliability, material and operating conditions)

a_1 : Reliability adjustment factor

a_2 : Material adjustment factor

a_3 : Operating condition adjustment factor

1.3.1 Life adjustment factor for reliability a_1

The values for the reliability adjustment factor a_1 (for a reliability factor higher than 90%) can be found in **Table 1.1**.

Table 1.1 Reliability adjustment factor values a_1

Reliability %	L_n	Reliability factor a_1
90	L_{10}	1.00
95	L_5	0.62
96	L_4	0.53
97	L_3	0.44
98	L_2	0.33
99	L_1	0.21

1.3.2 Life adjustment factor for material a_2

The life of a bearing is affected by the material type and quality as well as the manufacturing process. In this regard, the life is adjusted by the use of an a_2 factor.

The basic dynamic load ratings listed in the catalog are based on **NTN**'s standard material and manufacturing processes, therefore, the adjustment factor a_2=1. When special materials or processes are used the adjustment factor can be larger than 1.

NTN bearings can generally be used up to 120˚C. If bearings are operated at a higher temperature, the bearing must be specially heat treated (stabilized) so that inadmissible dimensional change does not occur due to changes in the micro-structure. This special heat treatment might cause the reduction of bearing life because of a hardness change.

1.3.3 Life adjustment factor a_3 for operating conditions

The operating conditions life adjustment factor a_3 is used to adjust for such conditions as lubrication, operating temperature, and other operation factors which have an effect on bearing life.

Generally speaking, when lubricating conditions are satisfactory, the a_3 factor has a value of one; and when lubricating conditions are exceptionally favorable, and all other operating conditions are normal, a_3 can have a value greater than one.

However, when lubricating conditions are particularly unfavorable and the oil film formation on the contact surfaces of the raceway and rolling elements is insufficient, the value of a_3 becomes less than one. This insufficient oil film formation can be caused, for example, by the lubricating oil viscosity being too low for the operating temperature (below 13 mm^2/s for ball bearings; below 20 mm^2/s for roller bearings); or by exceptionally low rotational speed ($n$min^{-1} x $d_p$mm less than 10,000). For bearings used under special operating conditions, please consult **NTN** Engineering.

As the operating temperature of the bearing increases, the hardness of the bearing material decreases. Thus, the bearing life correspondingly decreases. The operating temperature adjustment values are shown in **Fig. 1.2**.

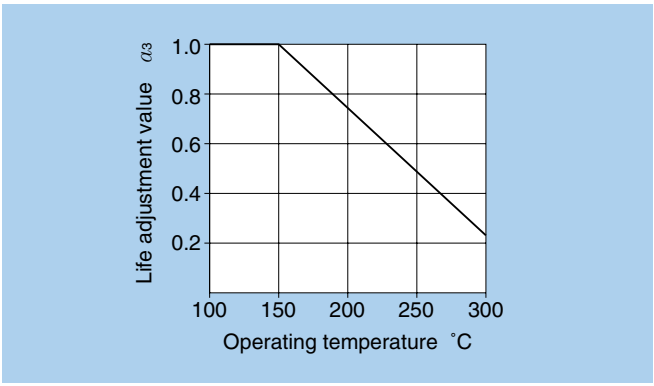

Fig. 1.2 Life adjustment value for operating temperature

1.4 Basic static load rating

When stationary rolling bearings are subjected to static loads, they suffer from partial permanent deformation of the contact surfaces at the contact point between the rolling elements and the raceway. The amount of deformity increases as the load increases, and if this increase in load exceeds certain limits, the subsequent smooth operation of the bearings is impaired.

It has been found through experience that a permanent deformity of 0.0001 times the diameter of the rolling element, occurring at the most heavily stressed contact point between the raceway and the rolling elements, can be tolerated without any impairment in running efficiency.

The basic rated static load refers to a fixed static load limit at which a specified amount of permanent deformation occurs. It applies to pure radial loads for radial bearings and to pure axial loads for thrust bearings. The maximum applied load values for contact stress occurring at the rolling element and raceway contact points are given below.

For ball bearings (except self-aligning ball bearings)	4,200 Mpa
For self-aligning ball bearings	4,600 Mpa
For roller bearings	4,000 Mpa

1.5 Allowable static equivalent load

Generally the static equivalent load which can be permitted (See Section 2.3.2 page A-9) is limited by the basic static rated load as stated in **Section 1.4**. However, depending on requirements regarding friction and smooth operation, these limits may be greater or lesser than the basic static rated load.

In the following formula (1.9) and **Table 1.2** the safety factor S_0 can be determined considering the maximum static equivalent load.

$$S_0 = C_0 / P_0 \cdots \quad (1.9)$$

where,

S_0 : Safety factor

C_0 : Basic static rated load, N
(radial bearings: C_{0r}, thrust bearings: C_{0a})

$P_{0\,max}$: Maximum static equivalent load, N
(radial: P_{0r} max, thrust: C_{0a} max)

Table 1.2 Minimum safety factor values S_0

Operating conditions	Ball bearings	Roller bearings
High rotational accuracy demand	2	3
Normal rotating accuracy demand (Universal application)	1	1.5
Slight rotational accuracy deterioration permitted (Low speed, heavy loading, etc.)	0.5	1

Notes: 1. For spherical thrust roller bearings, min. S_0 value=4.
2. For shell needle roller bearings, min. S_0 value=3.
3. When vibration and/or shock loads are present, a load factor based on the shock load needs to be included in the P_0 max value.
4. If a large axial load is applied to deep groove ball bearings or angular ball bearings, the contact oval may exceed the raceway surface. For more information, please contact **NTN** Engineering.

2. Bearing Load Calculation

To compute bearing loads, the forces which act on the shaft being supported by the bearing must be determined. These forces include the inherent dead weight of the rotating body (the weight of the shafts and components themselves), loads generated by the working forces of the machine, and loads arising from transmitted power.

It is possible to calculate theoretical values for these loads; however, there are many instances where the load acting on the bearing is usually determined by the nature of the load acting on the main power transmission shaft.

2.1 Load acting on shafts

2.1.1 Load factor

There are many instances where the actual operational shaft load is much greater than the theoretically calculated load, due to machine vibration and/or shock. This actual shaft load can be found by using formula (2.1)

$$K = f_w \cdot K_c \cdots (2.1)$$

where:

K : Actual shaft load N {kgf}
f_w : Load factor (**Table 2.1**)
K_c : Theoretically calculated value N {kgf}

Table 2.1 Load factor f_w

Amount of shock	f_w	Application
Very little or no shock	1.0～1.2	Electrical machines, machine tools, measuring instruments.
Light shock	1.2～1.5	Railway vehicles, automobiles, rolling mills, metal working machines, paper making machines, rubber mixing machines, printing machines, aircraft, textile machines, electrical units, office machines.
Heavy shock	1.5～3.0	Crushers, agricultural equipment, construction equipment, cranes.

2.2 Mean load

The load on bearings used in machines under normal circumstances will, in many cases, fluctuate according to a fixed time period or planned operation schedule. The load on bearings operating under such conditions can be converted to a mean load (F_m), this is a load which gives bearings the same life they would have under constant operating conditions.

(1) Fluctuating stepped load

The mean bearing load, F_m, for stepped loads is calculated from formula (2.2). F_1 , F_2 ..... F_n are the loads acting on the bearing; n_1, n_2.....n_n and t_1, t_2..... t_n are the bearing speeds and operating times respectively.

$$F_m = \left[\frac{\Sigma (F_i^{\,p} n_i t_i)}{(n_i t_i)} \right]^{1/p} \cdots (2.2)$$

where:

$p = 3$ For ball bearings
$p = 10/3$ For roller bearings

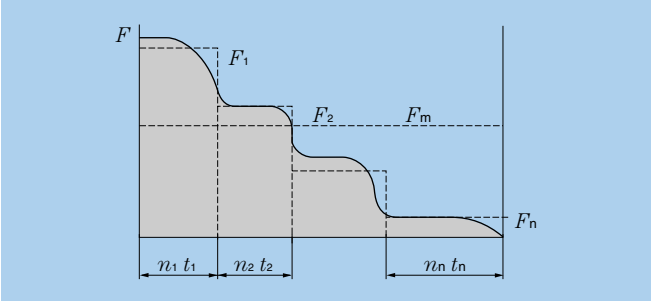

Fig. 2.1 Stepped load

(2) Consecutive series load

Where it is possible to express the function $F(t)$ in terms of load cycle to and time t, the mean load is found by using formula (2.3).

$$F_m = \left[\frac{1}{t_o} \int_o^{t_o} F(t)^p \, dt \right]^{1/p} \cdots (2.3)$$

where:

$p = 3$ For ball bearings
$p = 10/3$ For roller bearings

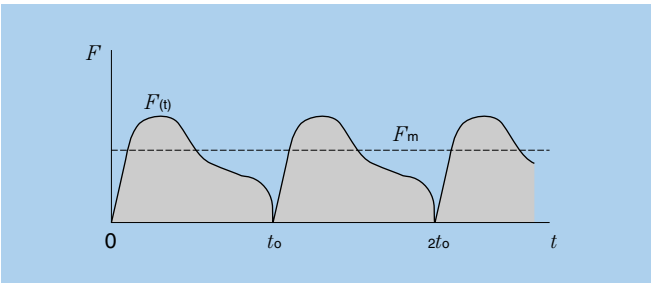

Fig. 2.2 Linear fluctuating load

(3) Linear fluctuating load

The mean load, F_m, can be approximated by formula (2.4).

$$F_m = \frac{F_{min} + 2F_{max}}{3} \cdots (2.4)$$

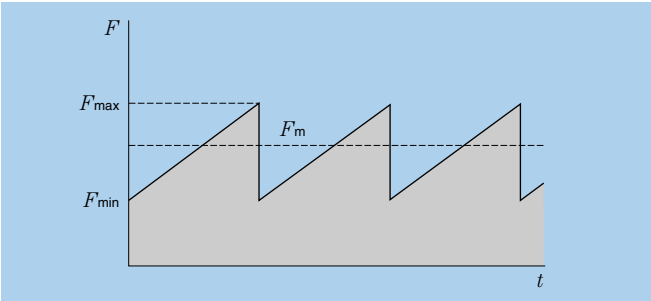

Fig. 2.3 Time function series load

(4) Sinusoidal fluctuating load

The mean load, F_m, can be approximated by formulas (2.5) and (2.6).

case (a) $F_m = 0.75F_{max}$ ····· (2.5)

case (b) $F_m = 0.65F_{max}$ ····· (2.6)

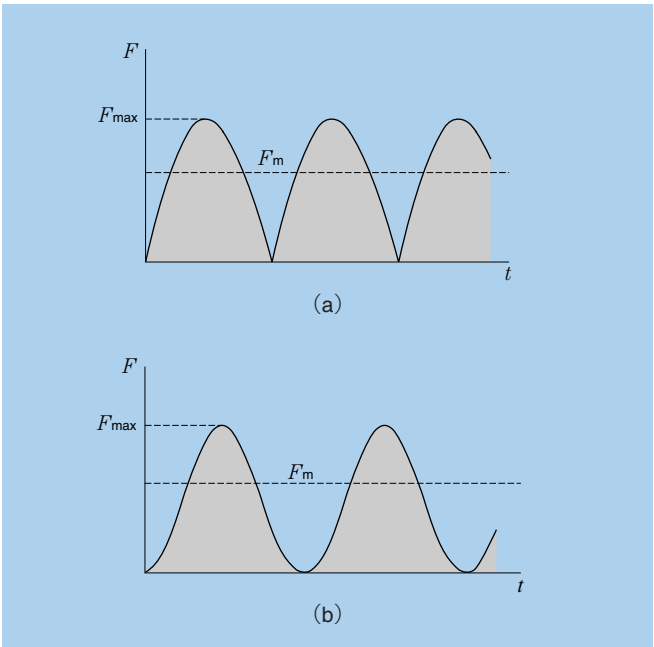

Fig. 2.4 Sinusoidal variable load

2.3 Equivalent load

2.3.1 Dynamic equivalent load

When both dynamic radial loads and dynamic axial loads act on a bearing at the same time, the hypothetical load acting on the center of the bearing giving the bearings the same life as if they had only a radial load or only an axial load, is called the dynamic equivalent load.

For radial bearings, this load is expressed as pure radial load and is called the dynamic equivalent radial load. For thrust bearings, it is expressed as pure axial load and is called the dynamic equivalent axial load.

(1) Dynamic equivalent radial load

The dynamic equivalent radial load is expressed by formula (2.7).

$$P_r = XF_r + YF_a \cdots\cdots\cdots\cdots\cdots (2.7)$$

where,

P_r : Dynamic equivalent radial load, N
F_r : Actual radial load, N
F_a : Actual axial load, N
X : Radial load factor
Y : Axial load factor

The values for X and Y are listed in the bearing tables.

(2) Dynamic equivalent axial load

As a rule, standard thrust bearings with a contact angle of 90˚ cannot carry radial loads. However, self-aligning thrust roller bearings can accept some radial load. The dynamic equivalent axial load for these bearings is given in formula (2.8).

$$P_a = F_a + 1.2F_r \cdots\cdots\cdots\cdots\cdots (2.8)$$

where,

P_a : Dynamic equivalent axial load, N
F_a : Actual axial load, N
F_r : Actual radial load, N

Provided that $F_r / F_a \leqq 0.55$ only.

2.3.2 Static equivalent load

The static equivalent load is a hypothetical load which would cause the same total permanent deformation at the most heavily stressed contact point between the rolling elements and the raceway as under actual load conditions; that is when both static radial loads and static axial loads are simultaneously applied to the bearing.

For radial bearings this hypothetical load refers to pure radial loads, and for thrust bearings it refers to pure centric axial loads. These loads are designated static equivalent radial loads and static equivalent axial loads respectively.

(1) Static equivalent radial load

For radial bearings the static equivalent radial load can be found by using formula (2.9) or (2.10). The greater of the two resultant values is always taken for P_{or}.

$$P_{or} = X_o F_r + Y_o F_a \cdots (2.9)$$

$$P_{or} = F_r \cdots\cdots\cdots\cdots (2.10)$$

where,

P_{or} : Static equivalent radial load, N
F_r : Actual radial load, N
F_a : Actual axial load, N
X_o : Static radial load factor
Y_o : Static axial load factor

The values for X_o and Y_o are given in the respective bearing tables.

(2) Static equivalent axial load

For spherical thrust roller bearings the static equivalent axial load is expressed by formula (2.11).

$$P_{oa} = F_a + 2.7F_r \cdots (2.11)$$

where,

P_{oa} : Static equivalent axial load, N
F_a : Actual axial load, N
F_r : Actual radial load, N

Provided that $F_r / F_a \leqq 0.55$ only.

3. Bearing Tolerances

3.1 Dimensional accuracy and running accuracy

Bearing “tolerances” or dimensional accuracy and running accuracy, are regulated by ISO and JIS B 1514 standards (rolling bearing tolerances). For **dimensional accuracy**, these standards prescribe the tolerances necessary when installing bearings on shafts or in housings. **Running accuracy** is defined as the allowable limits for bearing runout during operation.

Dimensional accuracy

Dimensional accuracy constitutes the acceptable values for bore diameter, outer diameter, assembled bearing width, and bore diameter uniformity as seen in chamfer dimensions, allowable inner ring tapered bore deviation and shape error. Also included are, average bore diameter variation average, outer diameter variation, average outer diameter unevenness, as well as raceway width and height variation (for thrust bearings).

Running accuracy

Running accuracy constitutes the acceptable values for inner and outer ring radial runout and axial runout, inner ring side runout, and outer ring outer diameter runout.

Allowable rolling bearing tolerances have been established according to precision classes. JIS Class 0 corresponds to normal precision class bearings, and precision becomes progressively higher as the class number becomes smaller; i.e., Class 6 is less precise than Class 5, which is less precise than Class 4, and so on.

Table 3.1 indicates which standards and precision classes are applicable to the major bearing types. **Table 3.2** shows a relative comparison between JIS B 1514 precision class standards and other standards. For greater detail on allowable error limitations and values, refer to **Tables 3.3** - **3.8**. Allowable values for chamfer dimensions are shown in **Table 3.9**, and allowable error limitations and values for radial bearing inner ring tapered bores are shown in **Table 3.10**.

Table 3.1 Bearing types and applicable tolerance

Bearing type		Applicable standard	Applicable tolerance					Tolerance table
Deep groove ball bearing		ISO492	class 0	class 6	class 5	class 4	class 2	Table 3.3
Angular contact ball bearings			class 0	class 6	class 5	class 4	class 2	
Cylindrical roller bearigns			class 0	class 6	class 5	class 4	class 2	
Spherical roller bearings			class 0	—	—	—	—	
Tapered roller bearings	metric	ISO492	class 0,6X	class 6	class 5	class 5	—	Table 3.4
	Inch	ABMA Std.19	class 4	class 2	class 3	class 0	class 00	Table 3.5
Thrust ball bearings		ISO199	class 0	class 6	class 5	class 4	—	Table 3.6
Spherical roller thrust bearings			class 0	—	—	—	—	Table 3.7
Thrust tapered roller bearings	metric	**NTN** standard	class 0	—	—	—	—	Table 3.8
	Inch	ANSI/ABMA Std. 23	class 2	—	—	—	—	Table 3.8

Table 3.2 Comparison of tolerance classifications of national standards

Standard		Tolerance Class					Bearing Types
Japanese industrial standard (JIS)	JIS B 1514	class 0,6X	class 6	class 5	class 4	class 2	All type
International Organization for Standardization (ISO)	ISO 492	Normal class Class 6X	Class 6	Class 5	Class 4	Class 2	Radial bearings
	ISO 199	Normal class	Class 6	Class 5	Class 4	—	Thrust ball bearings
	ISO 578	Class 4	—	Class 3	Class 0	Class 00	Tapered roller bearings (Inch series)
Deutsches Institut fur Normung(ISO)	DIN 620	P0	P6	P5	P4	P2	All type
American National Standards Institute (ANSI) Anti-Friction Bearing Manufacturers (ABMA)	ANSI/ABMA Std.20 ❶	ABEC-1 RBEC-1	ABEC-3 RBEC-3	ABEC-5 RBEC-5	ABEC-7	ABEC-9	Radial bearings (Except tapered roller bearings)
	ANSI/ABMA Std.19	Class 4	Class 2	Class 3	Class 0	Class 00	Tapered roller bearings (Inch series)

❶ "ABEC" is applied for ball bearings and "RBEC" for roller bearings.
Notes: 1. JIS B 1514, ISO 492 and 199, and DIN 620 have the same specification level.
2. The tolerance and allowance of JIS B 1514 are a little different from those of ABMA standards.

Table 3.3 Tolerance for radial bearings (Except tapered roller bearings)
Table 3.3 (1) Inner rings

Nominal bore diameter d mm		Single plane mean bore diameter deviation Δ_{dmp}										Single radial plane bore diameter variation V_{dp}														
												diameter series 9					max diameter series 0,1					max diameter series 2,3,4				
		class 0		class 6		class 5		class 4 ❶		class 2 ❶		class 0	class 6	class 5	class 4	class 2	class 0	class 6	class 5	class 4	class 2	class 0	class 6	class 5	class 4	class 2
over	incl.	high	low	high	low	high	low	high	low	high	low	max					max					max				
80	120	0	-20	0	-15	0	-10	0	-8	0	-5	25	19	10	8	5	25	19	8	6	5	15	11	8	6	5
120	150	0	-25	0	-18	0	-13	0	-10	0	-7	31	23	13	10	7	31	23	10	8	7	19	14	10	8	7
150	180	0	-25	0	-18	0	-13	0	-10	0	-7	31	23	13	10	7	31	23	10	8	7	19	14	10	8	7
180	250	0	-30	0	-22	0	-15	0	-12	0	-8	38	28	15	12	8	38	28	12	9	8	23	17	12	9	8
250	315	0	-35	0	-25	0	-18	—	—	—	—	44	31	18	—	—	44	31	14	—	—	26	19	14	—	—
315	400	0	-40	0	-30	0	-23	—	—	—	—	50	38	23	—	—	50	38	18	—	—	30	23	18	—	—
400	500	0	-45	0	-35	—	—	—	—	—	—	56	44	—	—	—	56	44	—	—	—	34	26	—	—	—
500	630	0	-50	0	-40	—	—	—	—	—	—	63	50	—	—	—	63	50	—	—	—	38	30	—	—	—
630	800	0	-75	—	—	—	—	—	—	—	—	94	—	—	—	—	94	—	—	—	—	55	—	—	—	—
800	1,000	0	-100	—	—	—	—	—	—	—	—	125	—	—	—	—	125	—	—	—	—	75	—	—	—	—
1,000	1,250	0	-125	—	—	—	—	—	—	—	—	155	—	—	—	—	155	—	—	—	—	94	—	—	—	—
1,250	1,600	0	-160	—	—	—	—	—	—	—	—	200	—	—	—	—	200	—	—	—	—	120	—	—	—	—
1,600	2,000	0	-200	—	—	—	—	—	—	—	—	250	—	—	—	—	250	—	—	—	—	150	—	—	—	—

❶ The dimensional difference Δ_{ds} of bore diameter to applied for class 4 and 2 is the same as the tolerance of dimensional difference Δ_{dmp} of average bore diameter. However, the dimensional difference is applied to diameter series 0, 1, 2, 3 and 4 against Class 4, and to all the diameter series against Class 2.

Table 3.3 (2) Outer rings

Nominal outside diameter D mm		Single plane mean outside diameter deviation Δ_{Dmp}										Single radial plane outside diameter variation V_{Dp} open type														
												diameter series 9					max diameter series 0,1					max diameter series 2,3,4				
		class 0		class 6		class 5		class 4 ❹		class 2 ❹		class 0	class 6	class 5	class 4	class 2	class 0	class 6	class 5	class 4	class 2	class 0	class 6	class 5	class 4	class 2
over	incl.	high	low	high	low	high	low	high	low	high	low	max					max					max				
80	120	0	-15	0	-13	0	-10	0	-8	0	-5	19	16	10	8	5	19	16	8	6	5	11	10	8	6	5
120	150	0	-18	0	-15	0	-11	0	-9	0	-5	23	19	11	9	5	23	19	8	7	5	14	11	8	7	5
150	180	0	-25	0	-18	0	-13	0	-10	0	-7	31	23	13	10	7	31	23	10	8	7	19	14	10	8	7
180	250	0	-30	0	-20	0	-15	0	-11	0	-8	38	25	15	11	8	38	25	11	8	8	23	15	11	8	8
250	315	0	-35	0	-25	0	-18	0	-13	0	-8	44	31	18	13	8	44	31	14	10	8	26	19	14	10	8
315	400	0	-40	0	-28	0	-20	0	-15	0	-10	50	35	20	15	10	50	35	15	11	10	30	21	15	11	10
400	500	0	-45	0	-33	0	-23	—	—	—	—	56	41	23	—	—	56	41	17	—	—	34	25	17	—	—
500	630	0	-50	0	-38	0	-28	—	—	—	—	63	48	28	—	—	63	48	21	—	—	38	29	21	—	—
630	800	0	-75	0	-45	0	-35	—	—	—	—	94	56	35	—	—	94	56	26	—	—	55	34	26	—	—
800	1,000	0	-100	0	-60	—	—	—	—	—	—	125	75	—	—	—	125	75	—	—	—	75	45	—	—	—
1,000	1,250	0	-125	—	—	—	—	—	—	—	—	155	—	—	—	—	155	—	—	—	—	94	—	—	—	—
1,250	1,600	0	-160	—	—	—	—	—	—	—	—	200	—	—	—	—	200	—	—	—	—	120	—	—	—	—
1,600	2,000	0	-200	—	—	—	—	—	—	—	—	250	—	—	—	—	250	—	—	—	—	150	—	—	—	—
2,000	2,500	0	-250	—	—	—	—	—	—	—	—	310	—	—	—	—	310	—	—	—	—	190	—	—	—	—

❹ The dimensional difference Δ_{Ds} of outer diameter to be applied for classes 4 and 2 is the same as the tolerance of dimensional difference Δ_{Dmp} of average outer diameter. However, the dimensional difference is applied to diameter series 0, 1, 2, 3 and 4 against Class 4, and also to all the diameter series against Class 2.

Unit μm

Mean single plane bore diameter variation V_{dmp}					Inner ring radial runout K_{ia}					Face runout with bore S_d			Inner ring axial runout (with side) S_{ia} ❷			Inner ring width deviation Δ_{BS}								Inner ring width variation V_{Bs}				
																normal						modified ❸							
class 0	class 6	class 5	class 4	class 2	class 0	class 6	class 5	class 4	class 2	class 5	class 4	class 2	class 5	class 4	class 2	class 0,6		class 5,4		class 2		class 0,6		class 5,4		class 0	class 6	class 5	class 4	class 2
max					max					max			max			high	low	high	low	high	low	high	low	high	low	max				
15	11	5	4	2.5	25	13	6	5	2.5	9	5	2.5	9	5	2.5	0	-200	0	-200	0	-200	0	-380	0	-380	25	25	7	4	2.5
19	14	7	5	3.5	30	18	8	6	2.5	10	6	2.5	10	7	2.5	0	-250	0	-250	0	-250	0	-500	0	-380	30	30	8	5	2.5
19	14	7	5	3.5	30	18	8	6	5	10	6	4	10	7	5	0	-250	0	-250	0	-300	0	-500	0	-380	30	30	8	5	4
23	17	8	6	4	40	20	10	8	5	11	7	5	13	8	5	0	-300	0	-300	0	-350	0	-500	0	-500	30	30	10	6	5
26	19	9	—	—	50	25	13	—	—	13	—	—	15	—	—	0	-350	0	-350	—	—	0	-500	0	-500	35	35	13	—	—
30	23	12	—	—	60	30	15	—	—	15	—	—	20	—	—	0	-400	0	-400	—	—	0	-630	0	-630	40	40	15	—	—
34	26	—	—	—	65	35	—	—	—	—	—	—	—	—	—	0	-450	—	—	—	—	—	—	—	—	50	45	—	—	—
38	30	—	—	—	70	40	—	—	—	—	—	—	—	—	—	0	-500	—	—	—	—	—	—	—	—	60	50	—	—	—
55	—	—	—	—	80	—	—	—	—	—	—	—	—	—	—	0	-750	—	—	—	—	—	—	—	—	70	—	—	—	—
75	—	—	—	—	90	—	—	—	—	—	—	—	—	—	—	0	-1,000	—	—	—	—	—	—	—	—	80	—	—	—	—
94	—	—	—	—	100	—	—	—	—	—	—	—	—	—	—	0	-1,250	—	—	—	—	—	—	—	—	100	—	—	—	—
120	—	—	—	—	120	—	—	—	—	—	—	—	—	—	—	0	-1,600	—	—	—	—	—	—	—	—	120	—	—	—	—
150	—	—	—	—	140	—	—	—	—	—	—	—	—	—	—	0	-2,000	—	—	—	—	—	—	—	—	140	—	—	—	—

❷ To be applied to deep groove ball bearing and angular contact ball bearings.
❸ To be applied to individual raceway rings manufactured for combined bearing use.

Unit μm

Mean single plane outside diameter variation V_{Dmp}					Outer ring radial runout K_{ea}					Outside surface inclination S_D			Outside ring axial runout S_{ea} ❺			Outer ring width variation V_{Cs}		
class 0	class 6	class 5	class 4	class 2	class 0	class 6	class 5	class 4	class 2	class 5	class 4	class 2	class 5	class 4	class 2	class 5	class 4	class 2
max					max					max			max			max		
11	10	5	4	2.5	35	18	10	6	5	9	5	2.5	11	6	5	8	4	2.5
14	11	6	5	2.5	40	20	11	7	5	10	5	2.5	13	7	5	8	5	2.5
19	14	7	5	3.5	45	23	13	8	5	10	5	2.5	14	8	5	8	5	2.5
23	15	8	6	4	50	25	15	10	7	11	7	4	15	10	7	10	7	4
26	19	9	7	4	60	30	18	11	7	13	8	5	18	10	7	11	7	5
30	21	10	8	5	70	35	20	13	8	13	10	7	20	13	8	13	8	7
34	25	12	—	—	80	40	23	—	—	15	—	—	23	—	—	15	—	—
38	29	14	—	—	100	50	25	—	—	18	—	—	25	—	—	18	—	—
55	34	18	—	—	120	60	30	—	—	20	—	—	30	—	—	20	—	—
75	45	—	—	—	140	75	—	—	—	—	—	—	—	—	—	—	—	—
94	—	—	—	—	160	—	—	—	—	—	—	—	—	—	—	—	—	—
120	—	—	—	—	190	—	—	—	—	—	—	—	—	—	—	—	—	—
150	—	—	—	—	220	—	—	—	—	—	—	—	—	—	—	—	—	—
190	—	—	—	—	250	—	—	—	—	—	—	—	—	—	—	—	—	—

❺ To be applied to deep groove ball bearings and angular contact ball bearings.

Table 3.4 Tolerance of tapered roller bearings (Metric system)

Table 3.4 (1) Inner rings

Nominal bore diameter d mm		Single plane mean bore diameter deviation Δ_{dmp}						Single radial plane bore diameter variation V_{dp}				Mean single plane bore diameter variation V_{dmp}				Inner ring radial runout K_{ia}				Face runout with bore S_d	
		class 0,6X		class 5,6		class 4 ❶															
over	incl.	high	low	high	low	high	low	class 0,6X	class 6	class 5	class 4	class 0,6X	class 6	class 5	class 4	class 0,6X	class 6	class 5	class 4	class 5	class 4
								max				max				max				max	
80	120	0	-20	0	-15	0	-10	20	15	11	8	15	11	8	5	30	13	8	5	9	5
120	180	0	-25	0	-18	0	-13	25	18	14	10	19	14	9	7	35	18	11	6	10	6
180	250	0	-30	0	-22	0	-15	30	22	17	11	23	16	11	8	50	20	13	8	11	7
250	315	0	-35	—	—	—	—	35	—	—	—	26	—	—	—	60	—	—	—	—	—
315	400	0	-40	—	—	—	—	40	—	—	—	30	—	—	—	70	—	—	—	—	—
400	500	0	-45	—	—	—	—	45	—	—	—	34	—	—	—	80	—	—	—	—	—
500	630	0	-50	—	—	—	—	50	—	—	—	38	—	—	—	90	—	—	—	—	—
630	800	0	-75	—	—	—	—	75	—	—	—	56	—	—	—	105	—	—	—	—	—
800	1,000	0	-100	—	—	—	—	100	—	—	—	75	—	—	—	120	—	—	—	—	—
1,000	1,250	0	-125	—	—	—	—	125	—	—	—	94	—	—	—	140	—	—	—	—	—
1,250	1,600	0	-160	—	—	—	—	160	—	—	—	120	—	—	—	160	—	—	—	—	—

❶ The dimensional difference Δ_{ds} of bore diameter to be applied for class 4 is the same as the tolerance of dimensional difference Δ_{dmp} of average bore diameter.

Table 3.4 (2) Outer rings

Nominal outside diameter D mm		Single plane mean outside diameter deviation Δ_{Dmp}						Single radial plane outside diameter variation V_{Dp}				Mean single plane outside diameter variation V_{Dmp}				Outer ring radial runout K_{ea}				Outside surface inclination S_D ❷	
		class 0,6X		class 5,6		class 4 ❸															
over	incl.	high	low	high	low	high	low	class 0,6X	class 6	class 5	class 4	class 0,6X	class 6	class 5	class 4	class 0,6X	class 6	class 5	class 4	class 5	class 4
								max				max				max				max	
80	120	0	-18	0	-13	0	-10	18	13	10	8	14	10	7	5	35	18	10	6	9	5
120	150	0	-20	0	-15	0	-11	20	15	11	8	15	11	8	6	40	20	11	7	10	5
150	180	0	-25	0	-18	0	-13	25	18	14	10	19	14	9	7	45	23	13	8	10	5
180	250	0	-30	0	-20	0	-15	30	20	15	11	23	15	10	8	50	25	15	10	11	7
250	315	0	-35	0	-25	0	-18	35	25	19	14	26	19	13	9	60	30	18	11	13	8
315	400	0	-40	0	-28	0	-20	40	28	22	15	30	21	14	10	70	35	20	13	13	10
400	500	0	-45	—	—	—	—	45	—	—	—	34	—	—	—	80	—	—	—	—	—
500	630	0	-50	—	—	—	—	50	—	—	—	38	—	—	—	100	—	—	—	—	—
630	800	0	-75	—	—	—	—	75	—	—	—	56	—	—	—	120	—	—	—	—	—
800	1,000	0	-100	—	—	—	—	100	—	—	—	75	—	—	—	140	—	—	—	—	—
1,000	1,250	0	-125	—	—	—	—	125	—	—	—	84	—	—	—	165	—	—	—	—	—
1,250	1,600	0	-160	—	—	—	—	160	—	—	—	120	—	—	—	190	—	—	—	—	—
1,600	2,000	0	-200	—	—	—	—	200	—	—	—	150	—	—	—	230	—	—	—	—	—

❷ The dimensional difference Δ_{Ds} of outside diameter to be applied for class 4 is the same as the tolerance of dimensional difference Δ_{Dmp} of average outside diameter.
❸ Δ_{Ds} as the same as Δ_{Dmp} in the case of class 4.

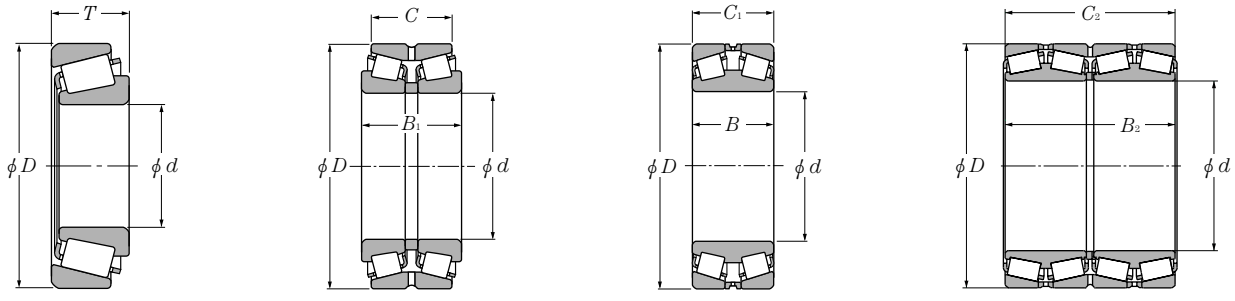

Single | Double Row (outside direction) | Double Row (inside direction) | Four Row

Unit μm

Inner ring axial runout (with side) S_{ia}	Inner ring width deviation Δ_{Bs}						Overall width deviation of assembled single row tapered roller bearing, or height deviation Δ_{Ts}						Overall width deviation of assembled double rows tapered roller bearing or height deviation Δ_{B1s}, Δ_{C1s}		Overall width deviation of assembled four rows tapered roller bearing or height deviation Δ_{B2s}, Δ_{C2s}	
class 4	class 0,6		class 6X		class 4,5		class 0,6		class 6X		class 4,5		class 0,6,5		class 0,6,5	
max	high	low	high	low	high	low	high	low	high	low	high	low	high	low	high	low
5	0	-200	0	-50	0	-400	+200	-200	+100	0	+200	-200	+400	-400	+500	-500
7	0	-250	0	-50	0	-500	+350	-250	+150	0	+350	-250	+500	-500	+600	-600
8	0	-300	0	-50	0	-600	+350	-250	+150	0	+350	-250	+600	-600	+750	-750
—	0	-350	0	-50	—	—	+350	-250	+200	0	—	—	+700	-700	+900	-900
—	0	-400	0	-50	—	—	+400	-400	+200	0	—	—	+800	-800	+1,000	-1,000
—	0	-450	—	—	—	—	—	—	—	—	—	—	+900	-900	+1,200	-1,200
—	0	-500	—	—	—	—	—	—	—	—	—	—	+1,000	-1,000	+1,200	-1,200
—	0	-750	—	—	—	—	—	—	—	—	—	—	+1,500	-1,500	+1,500	-1,500
—	0	-1,000	—	—	—	—	—	—	—	—	—	—	+1,500	-1,500	+1,500	-1,500
—	0	-1,200	—	—	—	—	—	—	—	—	—	—	+1,500	-1,500	+1,500	-1,500
—	0	-1,500	—	—	—	—	—	—	—	—	—	—	+1,500	-1,500	+1,500	-1,500

Unit μm

Outer ring axial runout S_{ea}	Outer ring width deviation Δ_{Cs}			
class 4	class 0,6,5,4		class 6X ❹	
max	sup.	inf.	sup.	inf.
6	Identical to Δ_{Bs} inner ring of same bearing		0	-100
7			0	-100
8			0	-100
10			0	-100
10			0	-100
13			0	-100
—			0	-100
—			0	-100
—			—	—
—			—	—
—			—	—
—			—	—
—			—	—

❹ To be applied for nominal bore diameters of 406.400mm (16 inch) or lass.

Table 3.4 (3) Effective width of outer and inner rings with roller Unit μm

Nominal bore diameter d mm		Effective width deviation of roller and inner ring assembly of tapered roller bearing Δ_{T1s}				Tapered roller bearing outer ring effective width deviation Δ_{T2s}			
		class 0		class 6X		class 0		class 6X	
over	incl.	high	low	high	low	high	low	high	low
80	120	+100	-100	+50	0	+100	-100	+50	0
120	180	+150	-150	+50	0	+200	-100	+100	0
180	250	+150	-150	+50	0	+200	-100	+100	0
250	315	+150	-150	+100	0	+200	-100	+100	0
315	400	+200	-200	+100	0	+200	-200	+100	0

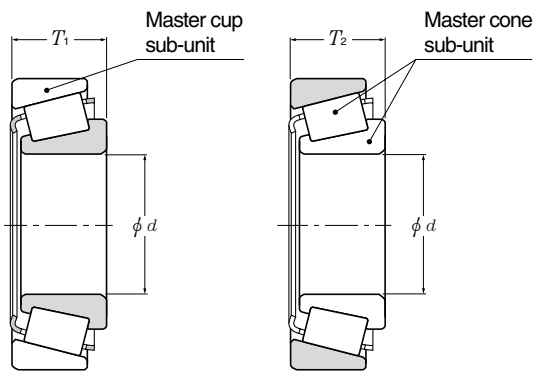

Table 3.5 Tolerance for tapered roller bearings of inch system

Table 3.5 (1) Inner rings

Unit μm

Nominal bore diameter d mm		Single bore diameter deviation Δ_{ds}									
		Class 4		Class 2		Class 3		Class 0		Class 00	
over	incl.	high	low	high	low	high	low	high	low	high	low
76.2	266.7	+25	0	+25	0	+13	0	+13	0	+8	0
266.7	304.8	+25	0	+25	0	+13	0	+13	0	–	–
304.8	609.6	+51	0	+51	0	+25	0	–	–	–	–
609.6	914.4	+76	0	–	–	+38	0	–	–	–	–
914.4	1,219.2	+102	0	–	–	+51	0	–	–	–	–
1,219.2	—	+127	0	–	–	+76	0	–	–	–	–

Table 3.5 (2) Outer rings

Unit μm

Nominal outside diameter D mm		Single outside diameter deviation Δ_{DS}									
		Class 4		Class 2		Class 3		Class 0		Class 00	
over	incl.	high	low	high	low	high	low	high	low	high	low
–	266.7	+25	0	+25	0	+13	0	+13	0	+8	0
266.7	304.8	+25	0	+25	0	+13	0	+13	0	–	–
304.8	609.6	+51	0	+51	0	+25	0	–	–	–	–
609.6	914.4	+76	0	+76	0	+38	0	–	–	–	–
914.4	1,219.2	+102	0	–	–	+51	0	–	–	–	–
1,219.2	–	+127	0	–	–	+76	0	–	–	–	–

Table 3.5 (3) Effective width of inner rings with roller and outer rings

Nominal bore diameter d mm		Nominal outside diameter D mm		Overall width deviation of assembled single row tapered roller bearing Δ_{Ts}								Overall width deviation of assembled 4-row tapered roller bearings Δ_{B2s}, Δ_{C2s}	
				Class 4		Class 2		Class 3		Class 0,00		Class 4,2,3,0	
over	incl.	over	incl.	high	low	high	low	high	low	high	low	high	low
–	101.6			+203	0	+203	0	+203	-203	+203	-203	+1,520	-1,520
101.6	304.8			+356	-254	+203	0	+203	-203	+203	-203	+1,520	-1,520
304.8	609.6	–	508.0	+381	-381	+381	-381	+203	-203	–	–	+1,520	-1,520
304.8	609.6	508.0	–	+381	-381	+381	-381	+381	-381	–	–	+1,520	-1,520
609.6	–			+381	-381	–	–	+381	-381	–	–	+1,520	-1,520

Table 3.5 (4) Radial deflection of inner and outer rings

Unit μm

Nominal outside diameter D mm		Inner ring radial runout K_{ia} Outer ring radial runout K_{ea}				
		Class 4	Class 2	Class 3	Class 0	Class 00
over	incl.	max				
–	304.8	51	38	8	4	2
304.8	609.6	51	38	18	–	–
609.6	914.4	76	51	51	–	–
914.4	–	76	–	76	–	–

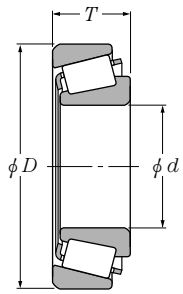

Single

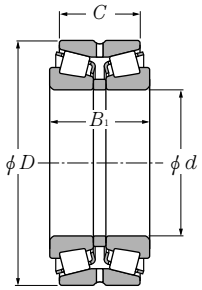

Double Row
(outside direction)

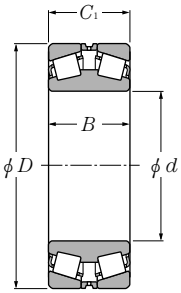

Double Row
(inside direction)

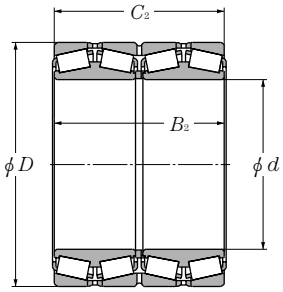

Four Row

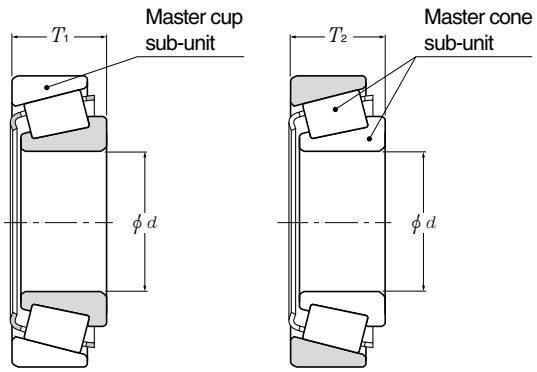

Unit μm

Effective width deviation of roller and inner ring assembly of tapered roller bearing Δ_{T1s}						Tapered roller bearing outer ring effective width deviation Δ_{T2s}					
Class 4		Class 2		Class 3		Class 4		Class 2		Class 3	
high	low	high	low	high	low	high	low	high	low	high	low
+102	0	+102	0	+102	-102	+102	0	+102	0	+102	-102
+152	-152	+102	0	+102	-102	+203	-102	+102	0	+102	-102
–	–	+178	-178 ❶	+102	-102 ❶	–	–	+203	-203 ❶	+102	-102 ❶
–	–	–	–	–	–	–	–	–	–	–	–
–	–	–	–	–	–	–	–	–	–	–	–

❶ To be applied for nominal bore diameters of 406.400 mm (16 inch) or less.

Table 3.6 Tolerance of thrust ball bearings

Table 3.6 (1) Shaft washer

Unit μm

Nominal bore diameter d mm		Single plane mean bore diameter deviation Δ_{dmp}				Single radial plane bore diameter variation V_{dp}		Thrust bearing shaft washer raceway (or center washer raceway) thickness variation S_i			
		Class 0,6,5		Class 4		Class 0,6,5	Class 4	Class 0	Class 6	Class 5	Class 4
over	incl.	high	low	high	low	max		max			
80	120	0	-20	0	-15	15	11	15	8	4	3
120	180	0	-25	0	-18	19	14	15	9	5	4
180	250	0	-30	0	-22	23	17	20	10	5	4
250	315	0	-35	0	-25	26	19	25	13	7	5
315	400	0	-40	0	-30	30	23	30	15	7	5
400	500	0	-45	0	-35	34	26	30	18	9	6
500	630	0	-50	0	-40	38	30	35	21	11	7
630	800	0	-75	0	-50	55	–	40	25	13	8
800	1,000	0	-100	–	–	75	–	45	30	15	–

Table 3.6 (2) Housing washer

Unit μm

Nominal outside diameter D mm		Single plane mean outside diameter deviation Δ_{Dmp}				Single radial plane outside diameter variation V_{Dp}		Thrust bearing housing washer raceway thickness variation S_e			
		Class 0,6,5		Class 4		Class 0,6,5	Class 4	Class 0	Class 6	Class 5	Class 4
over	incl.	high	low	high	low	max		max			
80	120	0	-22	0	-13	17	10	According to the tolerance of S_1 against "d" or "d_2" of the same bearings			
120	180	0	-25	0	-15	19	11				
180	250	0	-30	0	-20	23	15				
250	315	0	-35	0	-25	26	19				
315	400	0	-40	0	-28	30	21				
400	500	0	-45	0	-33	34	25				
500	630	0	-50	0	-38	38	29				
630	800	0	-75	0	-45	55	34				
800	1,000	0	-100	0	-60	75	45				
1,000	1,250	0	-125	–	–	95	–				

Table 3.6 (3) Height of bearings center washer

Unit μm

Nominal bore diameter d mm		Single direction type ❶ Δ_{Ts}	
over	incl.	high	low
80	120	0	-150
120	180	0	-175
180	250	0	-200
250	315	0	-225
315	400	0	-300
400	500	0	-350
500	630	0	-400
630	800	0	-500
800	1,000	0	-600

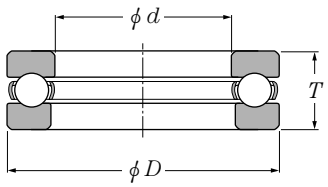

❶ This standard is applied to flat back face bearing of class 0.

Table 3.7 Tolerance of spherical thrust roller bearing

Table 3.7 (1) Shaft washer

Unit μm

Nominal bore diameter d mm		Single plane mean bore diameter deviation Δ_{dmp}		Single radial plane bore diameter variation V_{dp}	Face runout with bore S_d	Height deviation of single direction thrust bearing Δ_{Ts}	
over	incl.	high	low	max	max	high	low
80	120	0	-20	15	25	+200	-200
120	180	0	-25	19	30	+250	-250
180	250	0	-30	23	30	+300	-300
250	315	0	-35	26	35	+350	-350
315	400	0	-40	30	40	+400	-400
400	500	0	-45	34	45	+450	-450
500	630	0	-50	38	50	+500	-500
630	800	0	-75	55	60	+750	-750

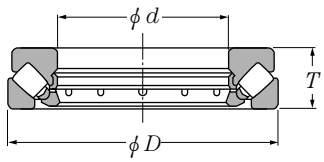

Table 3.7 (2) Housing washer

Unit μm

Nominal outside diameter d mm		Single plane mean outside diameter deviation Δ_{Dmp}	
over	incl.	high	low
120	180	0	-25
180	250	0	-30
250	315	0	-35
315	400	0	-40
400	500	0	-45
500	630	0	-50
630	800	0	-75
800	1,000	0	-100
1,000	1,250	0	-125
1,250	1,600	0	-160

Table 3.8 Tolerance of thrust tapered roller bearings

Table 3.8 (1) Shaft washer (metric series)

Unit μm

Nominal outside diameter d mm		Single plane mean bore diameter deviation Δ_{dmp}		Bearing hight deviation Δ_{Ts}	
over	incl.	high	low	high	low
80	120	0	-20	0	-150
120	180	0	-25	0	-175
180	250	0	-30	0	-200
250	315	0	-35	0	-225
315	400	0	-40	0	-300
400	500	0	-45	0	-350
500	630	0	-50	0	-400
630	800	0	-75	0	-500
800	1,000	0	-100	0	-600

Table 3.8 (2) Housing washer (metric series)

Unit μm

Nominal outside diameter D mm		Single plane mean outside diameter deviation Δ_{Dmp}	
over	incl.	high	low
180	250	0	-30
250	315	0	-35
315	400	0	-40
400	500	0	-45
500	630	0	-60
630	800	0	-75
800	1,000	0	-100
1,000	1,250	0	-125

Table 3.8 (3) Shaft washer (inch series)

Unit μm

Nominal bore diameter d		Single plane mean bore diameter deviation Δ_{dmp}		Bearing hight deviation Δ_{Ts}	
over mm	incl. mm	high	low	high	low
–	304.800	+25	0	+381	-381
304.800	609.600	+51	0	+381	-381
609.600	914.400	+76	0	+381	-381
914.400	1,219.200	+102	0	+381	-381

Table 3.8 (4) Housing washer (inch series)

Unit μm

Nominal outside diameter D		Single plane mean outside diameter deviation Δ_{Dmp}	
over mm	incl. mm	high	low
–	304.800	+25	0
304.800	609.600	+51	0
609.600	914.400	+76	0
914.400	1,219.200	+102	0
1,219.200	–	+127	0

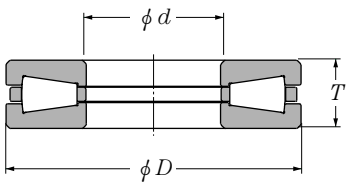

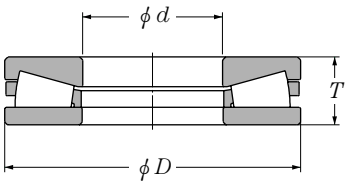

3.2 Limits and tolerances for chamfer and tapered bore

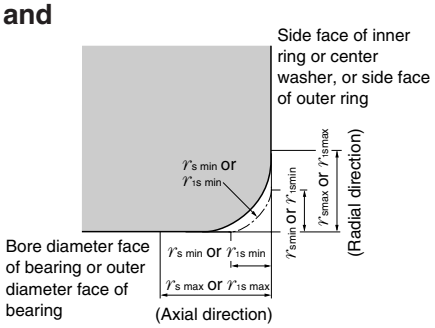

Table 3.9 Allowable critical-value of bearing chamfer

Table 3.9 (1) Radial bearing (except tapered roller bearing)

Unit mm

$r_{s\,min}$ ❶ or $r_{1s\,min}$	Nominal bore diameter d over	incl.	$r_{s\,max}$ or $r_{1s\,max}$ Radial direction	Axial direction
0.6	–	40	1	2
	40	–	1.3	2
1	–	50	1.5	3
	50	–	1.9	3
1.1	–	120	2	3.5
	120	–	2.5	4
1.5	–	120	2.3	4
	120	–	3	5
2	–	80	3	4.5
	80	220	3.5	5
	220	–	3.8	6
2.1	–	280	4	6.5
	280	–	4.5	7
2.5	–	100	3.8	6
	100	280	4.5	6
	280	–	5	7
3	–	280	5	8
	280	–	5.5	8
4	–	–	6.5	9
5	–	–	8	10
6	–	–	10	13
7.5	–	–	12.5	17
9.5	–	–	15	19
12	–	–	18	24
15	–	–	21	30
19	–	–	25	38

❶ These are the allowable minimum dimensions of the chamfer dimension "r" or "r_1" and are described in the dimensional table.

Table 3.9 (2) Tapered roller bearings of metric system

Unit mm

$r_{s\,min}$ ❷ or $r_{1s\,min}$	Nominal bore ❸ diameter of bearing "d" or nominal outside diameter "D" over	incl.	$r_{s\,max}$ or $r_{1s\,max}$ Radial direction	Axial direction
0.3	–	40	0.7	1.4
	40	–	0.9	1.6
0.6	–	40	1.1	1.7
	40	–	1.3	2
1	–	50	1.6	2.5
	50	–	1.9	3
1.5	–	120	2.3	3
	120	250	2.8	3.5
	250	–	3.5	4
2	–	120	2.8	4
	120	250	3.5	4.5
	250	–	4	5
2.5	–	120	3.5	5
	120	250	4	5.5
	250	–	4.5	6
3	–	120	4	5.5
	120	250	4.5	6.5
	250	400	5	7
	400	–	5.5	7.5
4	–	120	5	7
	120	250	5.5	7.5
	250	400	6	8
	400	–	6.5	8.5
5	–	180	6.5	8
	180	–	7.5	9
6	–	180	7.5	10
	180	–	9	11

❷ These are the allowable minimum dimensions of the chamfer dimension "r" or "r_1" and are described in the dimensional table.

❸ Inner rings shall be in accordance with the division of "d" and outer rings with that of "D".

Note: This standard will be applied to the bearings whose dimensional series (refer to the dimensional table) are specified in the standard of ISO 355 or JIS B 1512. Please consult **NTN** Engineering on non-standard bearings.

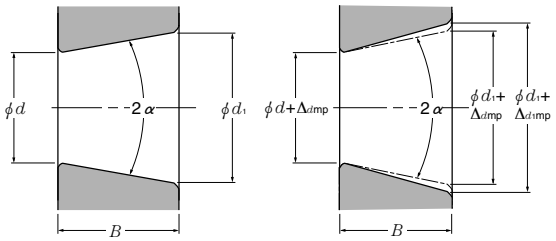

Theoretical tapered hole

Tapered hole having dimensional difference of the average bore diameter within the flat surface

Table 3.9 (3) Thrust bearings

Unit mm

$r_{s\,min}$ or $r_{1\,min}$ ❹	$r_{s\,max}$ or $r_{1s\,max}$ Radial and axial direcition
0.6	1.5
1	2.2
1.1	2.7
1.5	3.5
2	4
2.1	4.5
3	5.5
4	6.5
5	8
6	10
7.5	12.5
9.5	15
12	18
15	21
19	25

❹ These are the allowable minimum dimensions of the chamfer dimension "r" or "r_1" and are described in the dimensional table.

Table 3.10 (1) Tolerance and allowable values (Class 0) of tapered bore of radial bearings

Unit μm

d mm		Δ_{dmp}		Δ_{d1mp} - Δ_{dmp}		V_{dp} ❶❷
over	incl.	high	low	high	low	max
80	120	+ 54	0	+ 35	0	22
120	180	+ 63	0	+ 40	0	40
180	250	+ 72	0	+ 46	0	46
250	315	+ 81	0	+ 52	0	52
315	400	+ 89	0	+ 57	0	57
400	500	+ 97	0	+ 63	0	63
500	630	+110	0	+ 70	0	70
630	800	+125	0	+ 80	0	–
800	1,000	+140	0	+ 90	0	–
1,000	1,250	+165	0	+105	0	–
1,250	1,600	+195	0	+125	0	–

Table 3.10 (2) Allowable variations for radial bearing inner ring tapered bores standard taper ratio 1:30 (Class 0)

Units μm

d mm		Δ_{dmp}		Δ_{d1mp} - Δ_{dmp}		V_{dp} ❶❷
over	incl.	high	low	high	low	max
80	120	+20	0	+35	0	22
120	180	+25	0	+40	0	40
180	250	+30	0	+46	0	46
250	315	+35	0	+52	0	52
315	400	+40	0	+57	0	57
400	500	+45	0	+63	0	63
500	630	+50	0	+70	0	70

❶ Applies to all radial flat planes of inner ring tapered bore.

❷ Does not apply to diameter series 7 and 8.

Note: Quantifiers

For a standard taper ratio of 1:12 $d1=d+\frac{1}{12}B$

For a standard taper ratio of 1:30 $d1=d+\frac{1}{30}B$

Δ_{dmp} : Dimensional difference of the average bore diameter within the flat surface at the theoretical small end of the tapered bore.

Δ_{d1mp} : Dimensional difference of the average bore diameter within the flat surface at the theoretical large end of the tapered bore.

V_{dp} : Unevenness of the bore diameter with the flat surface

B : Nominal width of inner ring

α : Half of the tapered bore's nominal taper angle

For a standard taper ratio of 1:12 $\alpha=2^\circ 23' 9.4''$

For a standard taper ratio of 1:30 $\alpha=0^\circ 57' 7.4''$

4. Bearing Fits

4.1 Interference

For rolling bearings, inner and outer rings are fixed on the shaft or in the housing so that relative movement does not occur between fitted surfaces during operation or under load. This relative movement (referred to as "creep") between the fitted surfaces of the bearing and the shaft or housing can occur in a radial direction, an axial direction, or in the direction of rotation. To help prevent this creeping movement, bearing rings and the shaft or housing are installed with one of three interference fits, a **"tight fit"** (also called shrink fit), **"transition fit,"** or **"loose fit"** (also called clearance fit), and the degree of interference between their fitted surfaces varies.

The most effective way to fix the fitted surfaces between a bearing's raceway and shaft or housing is to apply a **"tight fit."** The advantage of this tight fit for thin walled bearings is that it provides uniform load support over the entire ring circumference without any loss of load carrying capacity. However, with a tight fit, ease of installation and disassembly is lost; and when using a non-separable bearing as the floating-side bearing, axial displacement is not possible. For this reason, a tight fit cannot be recommended in all cases.

4.2 The necessity of a proper fit

In some cases, improper fit may lead to damage and shorten bearing life, therefore it is necessary to make a careful analysis in selecting a proper fit. Some of the negative conditions caused by improper fit are listed below.

- Raceway cracking, early peeling and displacement of raceway
- Raceway and shaft or housing abrasion caused by creeping and fretting corrosion
- Seizing caused by loss of internal clearances
- Increased noise and lowered rotational accuracy due to raceway groove deformation

4.3 Fit selection

Selection of a proper fit is dependent upon thorough analysis of bearing operating conditions, including consideration of:

- Shaft and housing material, wall thickness, finished surface accuracy, etc.
- Machinery operating conditions (nature and magnitude of load, rotational speed, temperature, etc.)

4.3.1 "Tight fit," "transition fit," or "loose fit"

(1) For raceways under rotating loads, a tight fit is necessary. (refer to **Table 4.1**) "Raceways under rotating loads" refers to raceways receiving loads rotating relative to their radial direction. For raceways under static loads, on the other hand, a loose fit is sufficient.
(Example) Rotating inner ring load = the direction of the radial load on the inner ring is rotating relatively

(2) For non-separable bearings, such as deep groove ball bearings, it is generally recommended that either the inner ring or outer ring be given a loose fit.

Table 4.1 Radial load and bearing fit

Illustration	Bearing rotation	Ring load	Fit
Static load	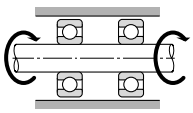 Inner ring: Rotatring; Outer ring: Stationary	Rotating inner ring load	Inner ring : Tight fit
Unbalanced load 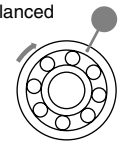	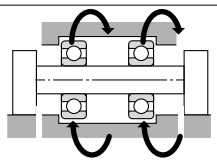 Inner ring: Stationary; Outer ring: Rotating	Static outer ring load	Outer ring : Loose fit
Static load	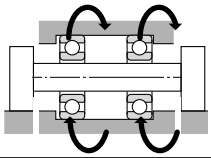 Inner ring: Stationary; Outer ring: Rotating	Static inner ring load	Inner ring : Loose fit
Unbalanced load 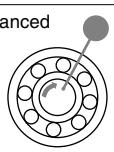	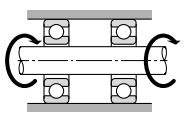 Inner ring: Rotating; Outer ring: Stationary	Rotating outer ring load	Outer ring : Tight fit

4.3.2 Recommended Fits

Bearing fit is governed by the selection tolerances for bearing shaft diameters and housing bore diameters.

Widely used fits for 0 Class tolerance bearings and various shaft and housing bore diameter tolerances are shown in **Fig. 4.1**.

Generally-used, standard fits for most types of bearings and operating conditions are shown in **Tables 4.2 - 4.6**.

Table 4.2: Fits for radial bearings
Table 4.3: Fits for thrust bearings
Table 4.4: Fits for electric motor bearings
Table 4.5: Fits for inch series tapered roller bearings (ANSI Class 4)
Table 4.6: Fits for inch series tapered roller bearings (ANSI Class 3 and 0)
Table 4.5. shows fits and their numerical values.

For special fits or applications, please consult **NTN** Engineering.

4.3.3 Interference minimum and maximum values

The following points should be considered when it is necessary to calculate the interference for an application:

- In calculating the minimum required amount of interference keep in mind that:
  1) interference is reduced by radial loads
  2) interference is reduced by differences between bearing temperature and ambient temperature
  3) interference is reduced by variation of fitted surfaces
- Maximum interference should be no more than 1:1000 of the shaft diameter or outer diameter.

Required interference calculations are shown below.

(1) Radial loads and required interference

Interference between inner rings mounted on solid shafts is reduced when acted upon by radial loads. Calculation of the minimum required amount of interference in such cases is shown in formulae (4.1) and (4.2).

$$F_r \leqq 0.3\, C_{or}$$

$$\left.\begin{aligned} \Delta_{dF} &= 0.08\,(d \cdot F_r / B)^{1/2} \quad \text{N} \\ &= 0.25\,(d \cdot F_r / B)^{1/2} \quad \{\text{kgf}\} \end{aligned}\right\} \cdots\cdots\cdots (4.1)$$

$$F_r > 0.3\, C_{or}$$

$$\left.\begin{aligned} \Delta_{dF} &= 0.02\,(F_r / B) \quad \text{N} \\ &= 0.2\,(F_r / B) \quad \{\text{kgf}\} \end{aligned}\right\} \cdots\cdots\cdots (4.2)$$

Where,

Δ_{dF} : Required effective interference for load μm
d : Nominal bore diameter mm
B : Inner ring width mm
F_r : Radial load N {kgf}
C_{or} : Basic static rated load N {kgf}

(2) Temperature difference and required interference

Interference between inner rings and steel shafts is reduced as a result of temperature increases (difference between bearing temperature and ambient temperature, ΔT) caused by bearing rotation. Calculation of the minimum required amount of interference in such cases is shown in formulae (4.3).

$$\Delta_{dT} = 0.0015\, d\, \Delta T \cdots\cdots\cdots (4.3)$$

Δ_{dT} : Required effective interference for temperature difference μm
ΔT : Difference between bearing temperature and ambient temperature ˚C
d : Bearing bore diameter mm

(3) Fitted surface variation and required interference

Interference between fitted surfaces is reduced by roughness and other slight variations of these surfaces which are flattened in the fitting process. The degree of reduced interference depends upon the finish treatment of these surfaces, but in general it is necessary to assume the following interference reductions.

For ground shafts: 1.0～2.5 μm
For lathed shafts: 5.0～7.0 μm

(4) Maximum interference

When bearing rings are installed with an interference fit, tension or compression stress may occur along their raceways. If interference is too great, this may cause damage to the rings and reduce bearing life. For these reasons, maximum interference should not exceed the previously mentioned ratio of 1:1,000 of shaft or outside diameter.

4.3.4 Other details

(1) Tight interference fits are recommended for,

- Operating conditions with large vibration or shock loads
- Applications using hollow shafts or housings with thin walls
- Applications using housings made of light alloys or plastic

(2) Loose interference fits are preferable for,

- Applications requiring high running accuracy
- Applications using small sized bearings or thin walled bearings

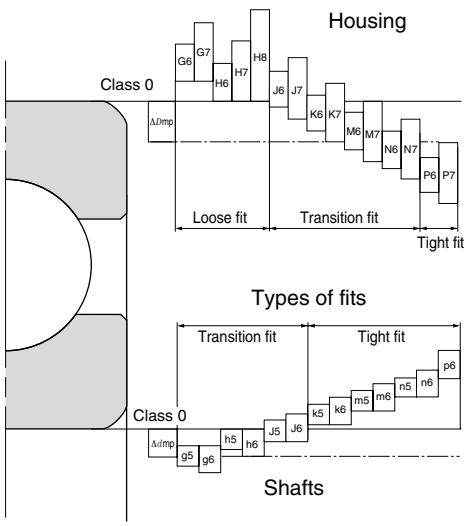

Fig. 4.1

(3) Consideration must also be given to the fact that fit selection will affect internal bearing clearance selection. (refer to page insert A-29)

(4) A particular type of fit is recommended for SL type cylindrical roller bearings.

Table 4.2 General standards for radial bearing fits (JIS Class 0, 6, 6X)

Table 4.2 (1) Tolerance class of shafts commonly used for radial bearings (classes 0, 6X and 6)

Nature of load	Fit	Load conditions, magnitude	Load conditions, magnitude Ball bearing		Cylindrical roller bearing Tapered roller bearing		Self-aligning roller bearings		Remarks
			Shaft diameter mm over incl	Tolerance class	Shaft diameter mm over incl	Tolerance class	Shaft diameter mm over incl	Tolerance class	
Indeterminate direction load Rotating inner ring load	Tight fit / Transition fit	Light or ❶ fluctuating variable load	18 ～100 100 ～200	js6 k6	40 ～140 140 ～200	k6 m6			When greater accuracy is required js5, k5, and m5 may be substituted for js6, k6, and m6.
		Normal load ❶	18 ～100 100 ～140 140 ～200 200 ～280	k5 m5 m6 n6	40 ～100 100 ～140 140 ～200 200 ～400	m5 m6 n6 p6	40 ～ 65 65 ～100 100 ～140 140 ～280 280 ～500	m5 m6 n6 p6 r6	Alteration of inner clearances to accommodate fit is not a consideration with single-row angular contact bearings and tapered roller bearings. Therefore, k5 and m5 may be substituted for k6 and m6.
		Heavy ❶ load or shock load			50 ～140 140 ～200 200 ～	n6 p6 r6	50 ～100 100 ～140 140 ～200	n6 p6 r6	Use bearings with larger internal clearances than CN clearance bearings.
Static inner ring load	Transition fit	Inner ring axial displacement possible	All shaft diameters	g6	All shaft diameters	g6	All shaft diameters	g6	When greater accuracy is required use g5. For large bearings, f6 may be used.
		Inner ring axial displacement unnecessary		h6		h6		h6	When greater accuracy is required use h5.
Centric axial load only	Transition fit	All loads	All shaft diameters	js6	All shaft diameters	js6	All shaft diameters	js6	General; depending on the fit, shaft and inner rings are not fixed.

Table 4.2 (2) Fit with shaft (fits for tapered bore bearings (Class 0) with adapter assembly/withdrawal sleeve)

All loads	All bearing types	All shaft diameters	Tolerance class		
				h9 / IT5 ❷	General applications
				h10/ IT7 ❷	Transmission shafts, etc.

❶ Standards for light loads, normal loads, and heavy loads
Light loads: equivalent radial load ≦ 0.06 C_r
Normal loads: 0.06 C_r < equivalent radial load ≦ 0.12 C_r
Heavy loads: 0.12 C_r < equivalent radial load

❷ IT5 and IT7 show shaft roundness tolerances, cylindricity tolerances, and related values.

Note: All values and fits listed in the above tables are for solid steel shafts.

Table 4.2 (3) Housing fits

Nature of load	Housing	Fit	Load conditions, magnitude	Tolerance class	Outer ring axial displacement ❷	Remarks
Rotating outer ring load or static outer ring load	Solid or split housing	Loose fit	All loads	H7	Displacement possible	G7 also acceptable for large type bearings as well as outer rings and housings with large temperature differences.
				G7	Easy displacement	
			Light ❶ to normal load	H8	Displacement possible	——
			Shaft and inner rings reach high temperature	G7	Easy displacement	F7 also acceptable for large type bearings as well as outer rings and housings with large temperature differences.
				F7	Easy displacement	
	Solid housing	Transition or loose fit	Requires silent operation	H6	Displacement possible	——
			High rotation accuracy required with light to normal loads	Js6	Displacement not possible (in principle)	Applies primarily to ball bearings
				K6	Displacement not possible (in principle)	Applies primarily to roller bearings
Direction indeterminate load		Tight to transition fit	Light to normal load	Js7	Displacement possible	When greater accuracy is required substitute Js6 for Js7 and K6 for K7.
			Normal to heavy load	K7	Displacement not possible (in principle)	
			Heavy shock load	M7	Displacement not possible	——
Inner ring static load or outer ring rotating load		Tight fit	Light or variable load	M7	Displacement not possible	——
			Normal to heavy load	N7	Displacement not possible	Applies primarily to ball bearings
			Heavy load (thin wall housing) or heavy shock load	P7	Displacement not possible	Applies primarily to roller bearings
Centered axial load only - Loose fit		Loose fit	——	Select a tolerance class that will provide clearance between outer ring and housing.		——

❶ Standards for light loads, normal loads, and heavy loads
- Light loads: equivalent radial load ≦ 0.06 C_r
- Normal loads: 0.06 C_r < equivalent radial load ≦ 0.12 C_r
- Heavy loads: 0.12 C_r < equivalent radial load

❷ Indicates whether or not outer ring axial displacement is possible with non-separable type bearings.

Notes: 1. All values and fits listed in the above tables are for cast iron or steel housings.
2. In cases where only a centered axial load acts on the bearing, select a tolerance class that will provide clearance in the axial direction for the outer ring.

Table 4.3 Standard fits for thrust bearings (JIS Class 0 and 6)

Table 4.3 (1) Shaft fits

Bearing type	Load conditions		Fit	Shaft diameter mm over incl	Tolerance class
All thrust bearings	Centered axial load only		Transition fit	All sizes	js6 or h6
Self-aligning roller thrust bearings	Combined load	Inner ring static load	Transition fit	All sizes	js6
		Inner ring rotating load or direction indeterminate load	Transition fit Tight fit	— ～ 200 200 ～ 400 400 ～	k6 or js6 m6 or k6 n6 or m6

Table 4.3 (2) Housing fits

Bearing type	Load conditions		Fit	Tolerance class	Remarks
All thrust bearings	Centered axial load only		Loose fit	Select a tolerance class that will provide clearance between outer ring and housing.	
				H8	Greater accuracy required with thrust ball bearings
Self-aligning roller thrust bearings	Combined load	Outer ring static load	Loose fit	H7	——
		Direction Indeterminate load or outer ring rotating load	Transition fit	K7	Normal operating conditions
				M7	For relatively large radial loads

Note: All values and fits listed in the above tables are for cast iron or steel housings.

Table 4.4 Fits for electric motor bearings

Bearing type	Shaft fits		Housing bore diameter	
	Shaft diameter mm over incl.	Tolerance class	Housing fits	Tolerance class
Deep groove ball bearings	18 ～100 100 ～160	k5 m5	All sizes	H6 or J6
Cylindrical roller bearings	40 ～160 160 ～200	m5 n6	All sizes	H6 or J6

Table 4.5 Fits for inch series tapered roller bearing (ANSI class 4)

Table 4.5 (1) Fit with shaft

Unit μm

Load conditions		Shaft diameter d mm over	incl.	Cone bore tolerance Δ_{ds} high	low	Shaft tolerance high	low	Extreme fits[1] max	min	Remark
Rotating cone load	Normal loads, no shock	76.2	304.8	+25	0	+ 64	+ 38	64T	13T	Applicable when slight impact load is applied as well.
		304.8	609.6	+51	0	+127	+ 76	127T	25T	
		609.6	914.4	+76	0	+190	+114	190T	38T	
	Heavy loads or shock loads	76.2	304.8	+25	0	Use average tight cone fit of 0.5 μm/mm, (0.0005 inch/inch) of cone bore, use a minimum fit of 25 μm, 0.0010 inch tight.				
		304.8	609.6	+51	0					
		609.6	914.4	+76	0					
Stationary cone load	Cone axial displacement on shaft necessary	76.2	304.8	+25	0	+ 25	0	25T	25L	Not applicable when impact load is applied.
		304.8	609.6	+51	0	+ 51	0	51T	51L	
		609.6	914.4	+76	0	+ 76	0	76T	76L	
	Cone axial displacement on shaft unnecessary	76.2	304.8	+25	0	0	- 25	0	50L	
		304.8	609.6	+51	0	0	- 51	0	102L	
		609.6	914.4	+76	0	0	- 76	0	152L	

Table 4.5 (2) Fit with housing

Unit μm

Load conditions		Housing bore diameter D mm over	incl.	Cup O.D. tolerance Δ_{Ds} high	low	Housing bore tolerance high	low	Extreme fits❶ max	min	Types of fit
Stationary cup load	Light and normal loads: cup easily axially displaceable	76.2	127.0	+25	0	+ 76	+ 51	26L	76L	loose fit
		127.0	304.8	+25	0	+ 76	+ 51	26L	76L	
		304.8	609.6	+51	0	+152	+102	51L	152L	
		609.6	914.4	+76	0	+229	+152	76L	229L	
	Light and normal loads: cup axially adjustable	76.2	127.0	+25	0	+ 25	0	25T	25L	tight interference fit
		127.0	304.8	+25	0	+ 51	0	25T	51L	
		304.8	609.6	+51	0	+ 76	+ 26	25T	76L	
		609.6	914.4	+76	0	+127	+ 51	25T	127L	
	Heavy loads: cup not axially displaceable	76.2	127.0	+25	0	- 25	- 51	76T	25T	tight fit
		127.0	304.8	+25	0	- 25	- 51	76T	25T	
		304.8	609.6	+51	0	- 25	- 76	127T	25T	
		609.6	914.4	+76	0	- 25	-102	178T	25T	
Rotating cup load	Cup not axially displaceable	76.2	127.0	+25	0	- 25	- 51	76T	25T	
		127.0	304.8	+25	0	- 25	- 51	76T	25T	
		304.8	609.6	+51	0	- 25	- 76	127T	25T	
		609.6	914.4	+76	0	- 25	-102	178T	25T	

❶ T= tight, L= loose

Table 4.6 Fits for inch series tapered roller bearing (ANSI class 3 and 0)

Table 4.6. (1) Fit with shaft

Unit μm

Load conditions		Shaft diameter d mm over	incl.	Cone bore tolerance Δ_{ds} high	low	Shaft tolerance high	low	Extreme fits[1] max	min
Rotating cone load	Precision machine tool spindles		~ 304.8	+13	0	+ 30	+ 18	30T ~	5T
		304.8 ~	609.6	+25	0	+ 64	+ 38	64T ~	13T
		609.6 ~	914.4	+38	0	+102	+ 64	102T ~	26T
	Heavy loads, or high speed or shock	76.2 ~	304.8	+13	0	Use minimum tight cone fit			
		304.8 ~	609.6	+25	0	of 0.25 μm/mm 0.00025 inch/inch			
		609.6 ~	914.4	+38	0	of cone bore.			
Stationary cone load	Precision machine tool spindles		~ 304.8	+13	0	+ 13	0	30T ~	5T
		304.8 ~	609.6	+25	0	+ 25	0	64T ~	13T
		609.6 ~	914.4	+38	0	+102	0	102T ~	26T

Note: Must be applied for maximum bore dia. 241.300mm (9.500 inch) in case of class 0 product.

Table 4.6 (2) Fit with housing

Unit μm

Load conditions		Housing bore diameter D mm over	incl.	Cup O.D. tolerance Δ_{Ds} high	low	Housing bore tolerance high	low	Extreme fits❶ max	min	Type of fit
Stationary cup load	Floating		~ 152.4	+13	0	+ 38	+ 25	12L ~	38L	loose fit
		152.4 ~	304.8	+13	0	+ 38	+ 25	12L ~	38L	
		304.8 ~	609.6	+25	0	+ 64	+ 38	13L ~	64L	
		609.6 ~	914.4	+38	0	+ 89	+ 51	13L ~	89L	
	Clamped		~ 152.4	+13	0	+ 25	+ 13	0 ~	25L	
		152.4 ~	304.8	+13	0	+ 25	+ 13	0 ~	25L	
		304.8 ~	609.6	+25	0	+ 51	+ 25	0 ~	51L	
		609.6 ~	914.4	+38	0	+ 76	+ 38	0 ~	76L	
	Adjustable		~ 152.4	+13	0	+ 13	0	13T ~	13L	tight interference fit
		152.4 ~	304.8	+13	0	+ 13	0	13T ~	13L	
		304.8 ~	609.6	+13	0	+ 25	0	25T ~	25L	
		609.6 ~	914.4	+38	0	+ 38	0	38T ~	38L	
	Nonadjustable or in carriers		~ 152.4	+13	0	0	- 13	26T ~	0	tight fit
		152.4 ~	304.8	+13	0	0	- 25	38T ~	0	
		304.8 ~	609.6	+25	0	0	- 25	50T ~	0	
		609.6 ~	914.4	+38	0	0	- 38	76T ~	0	
Rotating cup load	Nonadjustable or in carriers		~ 152.4	+13	0	- 13	- 25	38T ~	13T	
		152.4 ~	304.8	+13	0	- 13	- 38	51T ~	13T	
		304.8 ~	609.6	+25	0	- 13	- 38	63T ~	13T	
		609.6 ~	914.4	+38	0	- 13	- 51	89T ~	13T	

❶ T= tight, L= loose

Note: Must be applied for maximum cup OD 304.800mm (12.000 inch) in case of class 0 product.

5. Bearing Internal Clearance

5.1 Bearing internal clearance

Bearing internal clearance (initial clearance) is the amount of internal clearance a bearing has before being installed on a shaft or in a housing.

As shown in **Fig. 5.1**, when either the inner ring or the outer ring is fixed and the other ring is free to move, displacement can take place in either an axial or radial direction. This amount of displacement (radially or axially) is termed the internal clearance and, depending on the direction, is called the radial internal clearance or the axial internal clearance.

When the internal clearance of a bearing is measured, a slight measurement load is applied to the raceway so the internal clearance may be measured accurately. However, at this time, a slight amount of elastic deformation of the bearing occurs under the measurement load, and the clearance measurement value (measured clearance) is slightly larger than the true clearance. This discrepancy between the true bearing clearance and the increased amount due to the elastic deformation must be compensated for. These compensation values are given in **Table 5.1**. For roller bearings the amount of elastic deformation can be ignored.

The internal clearance values for each bearing class are shown in **Tables 5.2** through **5.9**.

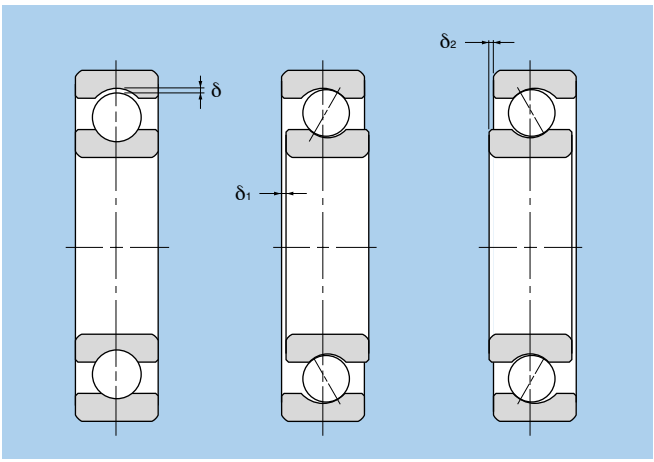

Radial clearance = δ Axial clearance = $\delta_1 + \delta_2$

Fig. 5.1 Internal clearance

5.2 Internal clearance selection

The internal clearance of a bearing under operating conditions (effective clearance) is usually smaller than the same bearing's initial clearance before being installed and operated. This is due to several factors including bearing fit, the difference in temperature between the inner and outer rings, etc. As a bearing's operating clearance has an effect on bearing life, heat generation, vibration, noise, etc.; care must be taken in selecting the most suitable operating clearance.

Effective internal clearance:
The internal clearance differential between the initial clearance and the operating (effective) clearance (the amount of clearance reduction caused by interference fits, or clearance variation due to the temperature difference between the inner and outer rings) can be calculated by the following formula:

$$\delta_{eff} = \delta_o - (\delta_f + \delta_t) \quad \cdots\cdots\cdots\cdots\cdots\cdots \quad (5.1)$$

where,

δ_{eff} : Effective internal clearance, mm
δ_o : Bearing internal clearance, mm
δ_f : Reduced amount of clearance due to interference, mm
δ_t : Reduced amount of clearance due to temperature differential of inner and outer r, mm

Table 5.1 Examples of applications where bearing clearances other than normal clearance are used

Operating conditions	Applications	Selected clearance
With heavy or shock load, clearance is great.	Railway vehicle axles	C3
	Vibration screens	C3, C4
With direction indeterminate load, both inner and outer rings are tight-fitted.	Railway vehicle traction motors	C4
	Tractors and final speed regulators	C4
Shaft or inner ring is heated.	Paper making machines and driers	C3, C4
	Rolling mill table rollers	C3
To reduce shaft runout, clearance is adjusted.	Main spindles of lathes (Double-row cylindrical roller bearings)	C9NA, C0NA

(1) Reduced clearance due to interference

When bearings are installed with interference fits on shafts and in housings, the inner ring will expand and the outer ring will contract; thus reducing the bearings' internal clearance. The amount of expansion or contraction varies depending on the shape of the bearing, the shape of the shaft or housing, dimensions of the respective parts, and the type of materials used. The differential can range from approximately 70% to 90% of the effective interference.

$$\delta_f = (0.70 \sim 0.90)\ \Delta_{deff} \quad \cdots\cdots (5.2)$$

where,

δ_f : Reduced amount of clearance due to interference, mm

Δ_{deff} : Effective interference, mm

(2) Reduced internal clearance due to inner/outer ring temperature difference.

During operation, normally the outer ring will range from 5 to 10℃ cooler than the inner ring or rotating parts. However, if the cooling effect of the housing is large, the shaft is connected to a heat source, or a heated substance is conducted through the hollow shaft; the temperature difference between the two rings can be even greater. The amount of internal clearance is thus further reduced by the differential expansion of the two rings.

$$\delta_t = \alpha \cdot \Delta T \cdot D_o \quad \cdots\cdots (5.3)$$

where,

δ_t : Amount of reduced clearance due to heat differential, mm

α : Bearing steel linear expansion coefficient 12.5×10^{-6}/℃

ΔT : Inner/outer ring temperature differential, ℃

D_o : Outer ring raceway diameter, mm

Outer ring raceway diameter, D_o, values can be approximated by using formula (5.4) or (5.5).

For ball bearings and self-aligning roller bearings,

$$D_o = 0.20\ (d + 4.0D) \quad \cdots\cdots (5.4)$$

For roller bearings (except self-aligning),

$$D_o = 0.25\ (d + 3.0D) \quad \cdots\cdots (5.5)$$

where,

d : Bearing bore diameter, mm

D : Bearing outside diameter, mm

Table 5.2 Radial internal clearance of deep groove ball bearings

Unit μm

Nominal bore diameter d mm		C2		Normal		C3		C4		C5	
over	incl.	min	max	min	max	min	max	min	max	min	max
80	100	1	18	12	36	30	58	53	84	75	120
100	120	2	20	15	41	36	66	61	97	90	140
120	140	2	23	18	48	41	81	71	114	105	160
140	160	2	23	18	53	46	91	81	130	120	180
160	180	2	25	20	61	53	102	91	147	135	200
180	200	2	30	25	71	63	117	107	163	150	230
200	225	2	35	25	85	75	140	125	195	175	265
225	250	2	40	30	95	85	160	145	225	205	300
250	280	2	45	35	105	90	170	155	245	225	340
280	315	2	55	40	115	100	190	175	270	245	370
315	355	3	60	45	125	110	210	195	300	275	410
355	400	3	70	55	145	130	240	225	340	315	460
400	450	3	80	60	170	150	270	250	380	350	510
450	500	3	90	70	190	170	300	280	420	390	570
500	560	10	100	80	210	190	330	310	470	440	630
560	630	10	110	90	230	210	360	340	520	490	690
630	710	20	130	110	260	240	400	380	570	540	760
710	800	20	140	120	290	270	450	430	630	600	840
800	900	20	160	140	320	300	500	480	700	670	940
900	1,000	20	170	150	350	330	550	530	770	740	1,040
1,000	1,120	20	180	160	380	360	600	580	850	820	1,150
1,120	1,250	20	190	170	410	390	650	630	920	890	1,260

Table 5.3 Radial internal clearance of double row and duplex angular contact ball bearings

Unit μm

Nominal bore diameter d mm over	incl.	C1 min	C1 max	C2 min	C2 max	Normal min	Normal max	C3 min	C3 max	C4 min	C4 max
80	100	3	13	13	22	22	40	40	60	95	120
100	120	3	15	15	30	30	50	50	75	110	140
120	150	3	16	16	33	35	55	55	80	130	170
150	180	3	18	18	35	35	60	60	90	150	200
180	200	3	20	20	40	40	65	65	100	180	240
200	225	3	25	25	50	50	75	75	115	210	270
225	250	3	25	25	50	50	75	80	130	230	300
250	280	3	30	30	55	55	85	90	150	260	340
280	315	3	30	30	55	55	85	100	170	300	380
315	400	-	-	40	65	60	85	110	180	-	-
400	500	-	-	40	65	60	85	110	180	-	-

Notes: 1. The clearance group in the table is applied only to contact angles in the table below.
2. This table shows **NTN** standard clearances.

Contact angle symbol	Nominal contact angle	Applicable clearance group ❷
C	15°	C1, C2
A ❶	30°	C2, Normal, C3
B	40°	Normal, C3, C4

❶ Usually not to be indicated

❷ For information concerning clearance other than applicable clearance, please contact **NTN** Engineering.

Table 5.4 Radial internal clearance of bearings for electric motor

Unit μm

Nominal bore diameter d mm over	incl.	Radial internal clearance CM: Deep groove ball bearings min	Deep groove ball bearings max	Cylindrical roller bearings min	Cylindrical roller bearings max
80 (incl.)	100	18	30	35	55
100	120	18	30	35	60
120	140	24	38	40	65
140	160	24	38	50	80
160	180	—	—	60	90
180	200	—	—	65	100

Notes: 1. Suffix CM is added to bearing numbers. Ex. 6220CM
2. Cylindrical roller bearings are non-interchangeable clearance.

Table 5.5 Radial internal clearance of cylindrical roller bearings, needle roller bearings (Interchangeable, cylindrical bore bearings)

Unit μm

Nominal bore diameter d mm over	incl.	C2 min	C2 max	Normal min	Normal max	C3 min	C3 max	C4 min	C4 max	C5 min	C5 max
80	100	15	50	50	85	75	110	105	140	155	190
100	120	15	55	50	90	85	125	125	165	180	220
120	140	15	60	60	105	100	145	145	190	200	245
140	160	20	70	70	120	115	165	165	215	225	275
160	180	25	75	75	125	120	170	170	220	250	300
180	200	35	90	90	145	140	195	195	250	275	330
200	225	45	105	105	165	160	220	220	280	305	365
225	250	45	110	110	175	170	235	235	300	330	395
250	280	55	125	125	195	190	260	260	330	370	440
280	315	55	130	130	205	200	275	275	350	410	485
315	355	65	145	145	225	225	305	305	385	455	535
355	400	100	190	190	280	280	370	370	460	510	600
400	450	110	210	210	310	310	410	410	510	565	665
450	500	110	220	220	330	330	440	440	550	625	735
500	560	120	240	240	360	360	480	480	600	-	-
560	630	140	260	260	380	380	500	500	620	-	-
630	710	145	285	285	425	425	565	565	705	-	-
710	800	150	310	310	470	470	630	630	790	-	-
800	900	180	350	350	520	520	690	690	860	-	-
900	1,000	200	390	390	580	580	770	770	960	-	-
1,000	1,120	220	430	430	640	640	850	850	1,060	-	-
1,120	1,250	230	470	470	710	710	950	950	1,190	-	-

Note: This table shows **NTN** standard clearances where "d>500mm".

Table 5.6 Radial internal clearance of cylindrical roller bearings, needle roller bearings (non-interchangeable)

Nominal bore diameter d mm		Bearing with cylindrical bore											
		C1NA		C2NA		NA❶		C3NA		C4NA		C5NA	
over	incl.	min	max	min	max	min	max	min	max	min	max	min	max
80	100	10	25	25	45	45	70	80	105	105	125	155	180
100	120	10	25	25	50	50	80	95	120	120	145	180	205
120	140	15	30	30	60	60	90	105	135	135	160	200	230
140	160	15	35	35	65	65	100	115	150	150	180	225	260
160	180	15	35	35	75	75	110	125	165	165	200	250	285
180	200	20	40	40	80	80	120	140	180	180	220	275	315
200	225	20	45	45	90	90	135	155	200	200	240	305	350
225	250	25	50	50	100	100	150	170	215	215	265	330	380
250	280	25	55	55	110	110	165	185	240	240	295	370	420
280	315	30	60	60	120	120	180	205	265	265	325	410	470
315	355	30	65	65	135	135	200	225	295	295	360	455	520
355	400	35	75	75	150	150	225	255	330	330	405	510	585
400	450	45	85	85	170	170	255	285	370	370	455	565	650
450	500	50	95	95	190	190	285	315	410	410	505	625	720
500	560	-	-	100	210	210	320	350	450	450	550	720	815
560	630	-	-	110	230	230	350	380	500	500	615	800	910
630	710	-	-	130	260	260	400	435	570	570	695	900	1,030
710	800	-	-	140	290	290	450	485	635	635	780	1,000	1,140
800	900	-	-	160	330	330	500	540	700	700	860	1,130	1,290
900	1,000	-	-	180	360	360	560	600	780	780	970	1,270	1,440
1,000	1,120	-	-	200	400	400	620	670	900	900	1,100	1,410	1,620
1,120	1,250	-	-	220	440	440	690	750	1,000	1,000	1,220	1,580	1,820

❶ For bearings with normal clearance, only NA is added to bearing numbers. Ex. NU310NA

Table 5.7 Axial internal clearance of metric double row and duplex tapered roller bearings (except series 329X, 322C, 323C)

Nominal bore diameter d mm		Contact angle α ≦27° (e ≦ 0.76)							
		C2		Normal		C3		C4	
over	incl.	min	max	min	max	min	max	min	max
80	100	45	150	150	260	280	390	390	500
100	120	45	175	175	305	350	480	455	585
120	140	45	175	175	305	390	520	500	630
140	160	60	200	200	340	400	540	520	660
160	180	80	220	240	380	440	580	600	740
180	200	100	260	260	420	500	660	660	820
200	225	120	300	300	480	560	740	720	900
225	250	160	360	360	560	620	820	820	1,020
250	280	180	400	400	620	700	920	920	1,140
280	315	200	440	440	680	780	1,020	1,020	1,260
315	355	220	480	500	760	860	1,120	1,120	1,380
355	400	260	560	560	860	980	1,280	1,280	1,580
400	500	300	600	620	920	1,100	1,400	1,440	1,740
500	560	350	650	750	1,050	1,250	1,550	1,650	1,950
560	630	400	700	850	1,150	1,400	1,700	1,850	2,150
630	710	500	850	1,000	1,350	1,650	2,000	2,100	2,450
710	800	550	950	1,100	1,500	1,800	2,200	2,300	2,700
800	900	650	1,050	1,250	1,650	2,000	2,400	2,550	2,950
900	1,000	700	1,100	1,400	1,800	2,200	2,600	2,900	3,300
1,000	1,120	750	1,250	1,500	2,000	2,500	3,000	3,250	3,750
1,120	1,250	850	1,350	1,700	2,200	2,850	3,350	3,700	4,200
1,250	1,400	1,000	1,500	2,000	2,500	3,000	3,500	4,000	4,500

Notes: 1. This table applies to bearings contained in the catalog. For information concerning other bearings or bearings using US customary unit, please contact **NTN** Engineering.
2. The correlation of axial internal clearance (Δ_a) and radial internal clearance (Δ_r) is expressed as $\Delta_r = 0.667 \cdot e \cdot \Delta_a$.
e: Constant (see dimensions table)
3. Bearing series 329X, 330, 322C and 323Cdo not apply to the table.
4. This table shows **NTN** standard clearances.

Unit μm

Bearing with tapered bore												Nominal bore diameter d mm	
C9NA❷		C0NA❷		C1NA		C2NA		NA❶		C3NA			
min	max	min	max	min	max	min	max	min	max	min	max	over	incl.
10	25	20	35	25	45	45	70	80	105	105	125	80	100
10	25	20	35	25	50	50	80	95	120	120	145	100	120
15	30	25	40	30	60	60	90	105	135	135	160	120	140
15	35	30	45	35	65	65	100	115	150	150	180	140	160
15	35	30	45	35	75	75	110	125	165	165	200	160	180
20	40	30	50	40	80	80	120	140	180	180	220	180	200
20	45	35	55	45	90	90	135	155	200	200	240	200	225
25	50	40	65	50	100	100	150	170	215	215	265	225	250
25	55	40	65	55	110	110	165	185	240	240	295	250	280
30	60	45	75	60	120	120	180	205	265	265	325	280	315
30	65	45	75	65	135	135	200	225	295	295	360	315	355
35	75	50	90	75	150	150	225	255	330	330	405	355	400
45	85	60	100	85	170	170	255	285	370	370	455	400	450
50	95	70	115	95	190	190	285	315	410	410	505	450	500
-	-	-	-	100	210	210	320	350	450	450	550	500	560
-	-	-	-	110	230	230	350	380	500	500	615	560	630
-	-	-	-	130	260	260	400	435	570	570	695	630	710
-	-	-	-	140	290	290	450	485	635	635	780	710	800
-	-	-	-	160	330	330	500	540	700	700	860	800	900
-	-	-	-	180	360	360	560	600	780	780	970	900	1,000
-	-	-	-	200	400	400	620	670	900	900	1,100	1,000	1,120
-	-	-	-	220	440	440	690	750	1,000	1,000	1,220	1,120	1,250

❷ C9NA, C0NA and C1NA are applied only to precision bearings of Class 5 and higher.

Unit μm

Contact angle $\alpha > 27^\circ$ ($e > 0.76$)								Nominal bore diameter d mm	
C2		Normal		C3		C4			
min	max	min	max	min	max	min	max	over	incl.
20	70	70	120	130	180	180	230	80	100
20	70	70	120	150	200	210	260	100	120
20	70	70	120	160	210	210	260	120	140
30	100	100	160	180	240	240	300	140	160
40	110	110	180	200	270	280	340	160	180
50	120	120	190	230	300	310	380	180	200
60	140	140	200	260	340	340	420	200	225
80	160	170	260	290	380	380	470	225	250
90	190	190	280	320	420	430	520	250	280
90	200	200	310	360	470	470	580	280	315
100	220	230	350	400	510	520	630	315	355
120	260	260	400	450	590	590	730	355	400
140	280	280	420	510	640	650	780	400	500
160	310	310	460	530	650	680	820	500	630
180	350	350	520	590	760	760	930	630	800

Table 5.8 Axial internal clearance of double row and duplex tapered roller bearings (inch series)

Table 5.8 (1) contact angle $\alpha < 12^\circ$

Unit μm

Nominal bore diameter ❶ d mm		Contact angle $\alpha < 12^\circ$ ($e < 0.32$)							
		C2		Normal		C3		C4	
over	incl.	min	max	min	max	min	max	min	max
63.5	127	55	165	290	400	400	510	510	620
127	203.2	85	230	320	470	470	620	620	770
203.2	304.8	140	320	370	550	550	730	730	910
304.8	406.4	200	420	660	880	880	1,100	1,100	1,320
406.4	508	260	520	710	970	970	1,230	1,230	1,490
508	609.6	340	640	790	1,090	1,090	1,390	1,390	1,690
609.6	711.2	430	780	1,120	1,470	1,470	1,820	1,820	2,170
711.2	762	-	-	-	-	-	-	-	-
762	914.4	-	-	-	-	-	-	-	-

❶ Nominal bore diameter is the minimum size among the same series.

Note: This table shows **NTN** standard clearances.

Table 5.8 (2) $12^\circ \leqq$ contact angle $\alpha < 15^\circ$

Unit μm

Nominal bore diameter ❶ d mm		12° ≦ Contact angle $\alpha < 15^\circ$ ($0.32 \leqq e < 0.40$)							
		C2		Normal		C3		C4	
over	incl.	min	max	min	max	min	max	min	max
63.5	127	45	135	240	330	330	420	420	510
127	203.2	70	190	270	390	390	510	510	630
203.2	304.8	120	270	310	460	460	610	610	760
304.8	406.4	160	340	550	730	730	910	910	1,090
406.4	508	210	420	590	800	800	1,010	1,010	1,220
508	609.6	280	530	650	900	900	1,150	1,150	1,400
609.6	711.2	350	640	930	1,220	1,220	1,510	1,510	1,800
711.2	762	420	750	990	1,320	1,320	1,650	1,650	1,980
762	914.4	520	890	1,070	1,440	1,440	1,810	1,810	2,180

❶ Nominal bore diameter is the minimum size among the same series.

Note: This table shows **NTN** standard clearances.

Table 5.8 (3) $15^\circ \leqq$ contact angle $\alpha < 20^\circ$

Unit μm

Nominal bore diameter ❶ d mm		15° ≦ Contact angle $\alpha < 20^\circ$ ($0.40 \leqq e < 0.55$)							
		C2		Normal		C3		C4	
over	incl.	min	max	min	max	min	max	min	max
63.5	127	35	105	190	260	260	330	330	400
127	203.2	55	155	210	310	310	410	410	510
203.2	304.8	90	210	240	360	360	480	480	600
304.8	406.4	130	270	440	580	580	720	720	860
406.4	508	170	340	470	640	640	810	810	980
508	609.6	220	420	520	720	720	920	920	1,120
609.6	711.2	280	510	740	970	970	1,200	1,200	1,430
711.2	762	340	600	780	1,040	1,040	1,300	1,300	1,560
762	914.4	410	700	850	1,140	1,140	1,430	1,430	1,720

❶ Nominal bore diameter is the minimum size among the same series.

Note: This table shows **NTN** standard clearances.

Table 5.8 (4) 20°≦ contact angle α <30°

Unit μm

Nominal bore❶ diameter d mm		20° ≦ Contact angle α <30° (0.55≦ e <0.87)							
		C2		Normal		C3		C4	
over	incl.	min	max	min	max	min	max	min	max
63.5	127	30	80	140	190	190	240	240	290
127	203.2	40	110	160	230	230	300	300	370
203.2	304.8	70	160	180	270	270	360	360	450
304.8	406.4	95	195	320	420	420	520	520	620
406.4	508	120	240	350	470	470	590	590	710
508	609.6	160	310	380	530	530	680	680	830
609.6	711.2	210	380	540	710	710	880	880	1,050
711.2	762	250	440	580	770	770	960	960	1,150
762	914.4	300	520	630	850	850	1,070	1,070	1,290

❶ Nominal bore diameter is the minimum size among the same series.

Note: This table shows **NTN** standard clearances.

Table 5.8 (5) 30°≦ contact angle α

Unit μm

Nominal bore❶ diameter d mm		30° ≦ Contact angle α (0.87≦ e)							
		C2		Normal		C3		C4	
over	incl.	min	max	min	max	min	max	min	max
63.5	127	15	50	90	125	125	160	160	200
127	203.2	25	70	100	145	145	190	190	240
203.2	304.8	45	100	110	170	170	230	230	290
304.8	406.4	60	130	200	270	270	340	340	410
406.4	508	80	160	220	300	300	380	380	460
508	609.6	100	200	-	-	-	-	-	-
609.6	711.2	130	250	-	-	-	-	-	-
711.2	762	160	290	-	-	-	-	-	-
762	914.4	190	330	-	-	-	-	-	-

❶ Nominal bore diameter is the minimum size among the same series.

Note: This table shows **NTN** standard clearances.

Table 5.9 Radial internal clearance of spherical roller bearings

Nominal bore diameter d mm		Bearing with cylindrical bore									
		C2		Normal		C3		C4		C5	
over	incl.	min	max	min	max	min	max	min	max	min	max
80	100	35	60	60	100	100	135	135	180	180	225
100	120	40	75	75	120	120	160	160	210	210	260
120	140	50	95	95	145	145	190	190	240	240	300
140	160	60	110	110	170	170	220	220	280	280	350
160	180	65	120	120	180	180	240	240	310	310	390
180	200	70	130	130	200	200	260	260	340	340	430
200	225	80	140	140	220	220	290	290	380	380	470
225	250	90	150	150	240	240	320	320	420	420	520
250	280	100	170	170	260	260	350	350	460	460	570
280	315	110	190	190	280	280	370	370	500	500	630
315	355	120	200	200	310	310	410	410	550	550	690
355	400	130	220	220	340	340	450	450	600	600	750
400	450	140	240	240	370	370	500	500	660	660	820
450	500	140	260	260	410	410	550	550	720	720	900
500	560	150	280	280	440	440	600	600	780	780	1,000
560	630	170	310	310	480	480	650	650	850	850	1,100
630	710	190	350	350	530	530	700	700	920	920	1,190
710	800	210	390	390	580	580	770	770	1,010	1,010	1,300
800	900	230	430	430	650	650	860	860	1,120	1,120	1,440
900	1,000	260	480	480	710	710	930	930	1,220	1,220	1,570
1,000	1,120	290	530	530	780	780	1,020	1,020	1,330	1,330	1,720
1,120	1,250	320	580	580	860	860	1,120	1,120	1,460	1,460	1,870
1,250	1,400	350	640	640	950	950	1,240	1,240	1,620	1,620	2,080
1,400	1,600	400	720	720	1,060	1,060	1,380	1,380	1,800	-	-
1,600	1,800	450	810	810	1,180	1,180	1,550	1,550	2,000	-	-

Note: This table shows **NTN** standard clearances where "d>1,000mm".

Unit μm

Bearing with tapered bore										Nominal bore diameter d mm	
C2		Normal		C3		C4		C5			
min	max	min	max	min	max	min	max	min	max	over	incl.
55	80	80	110	110	140	140	180	180	230	80	100
65	100	100	135	135	170	170	220	220	280	100	120
80	120	120	160	160	200	200	260	260	330	120	140
90	130	130	180	180	230	230	300	300	380	140	160
100	140	140	200	200	260	260	340	340	430	160	180
110	160	160	220	220	290	290	370	370	470	180	200
120	180	180	250	250	320	320	410	410	520	200	225
140	200	200	270	270	350	350	450	450	570	225	250
150	220	220	300	300	390	390	490	490	620	250	280
170	240	240	330	330	430	430	540	540	680	280	315
190	270	270	360	360	470	470	590	590	740	315	355
210	300	300	400	400	520	520	650	650	820	355	400
230	330	330	440	440	570	570	720	720	910	400	450
260	370	370	490	490	630	630	790	790	1,000	450	500
290	410	410	540	540	680	680	870	870	1,100	500	560
320	460	460	600	600	760	760	980	980	1,230	560	630
350	510	510	670	670	850	850	1,090	1,090	1,360	630	710
390	570	570	750	750	960	960	1,220	1,220	1,500	710	800
440	640	640	840	840	1,070	1,070	1,370	1,370	1,690	800	900
490	710	710	930	930	1,190	1,190	1,520	1,520	1,860	900	1,000
530	770	770	1,030	1,030	1,300	1,300	1,670	1,670	2,050	1,000	1,120
570	830	830	1,120	1,120	1,420	1,420	1,830	1,830	2,250	1,120	1,250
620	910	910	1,230	1,230	1,560	1,560	2,000	2,000	2,470	1,250	1,400
680	1,000	1,000	1,350	1,350	1,720	1,720	2,200	-	-	1,400	1,600
750	1,110	1,110	1,500	1,500	1,920	1,920	2,400	-	-	1,600	1,800

6. Lubrication

6.1 Lubrication of rolling bearings

The purpose of bearing lubrication is to prevent direct metallic contact between the various rolling and sliding elements. This is accomplished through the formation of a thin oil (or grease) film on the contact surfaces. For rolling bearings, lubrication also has the following advantages:

(1) Friction and wear reduction
(2) Friction heat dissipation
(3) Prolonged bearing life
(4) Prevention of rust
(5) Protection against harmful elements

In order to achieve the above effects, the most effective lubrication method for the operating conditions must be selected. Also, a good quality, reliable lubricant must be selected. In addition, an effectively designed sealing system that prevents the intrusion of damaging elements (dust, water, etc.) into the bearing interior, removes dust and other impurities from the lubricant, and prevents the lubricant from leaking to the outside, is also a requirement.

Almost all rolling bearings use either grease or oil lubrication methods, but in some special applications, a solid lubricant such as molybdenum disulfide or graphite may be used.

Fig. 6.1 shows the relationship between oil volume, friction loss, and bearing temperature. **Table 6.1** details the characteristics of this relationship.

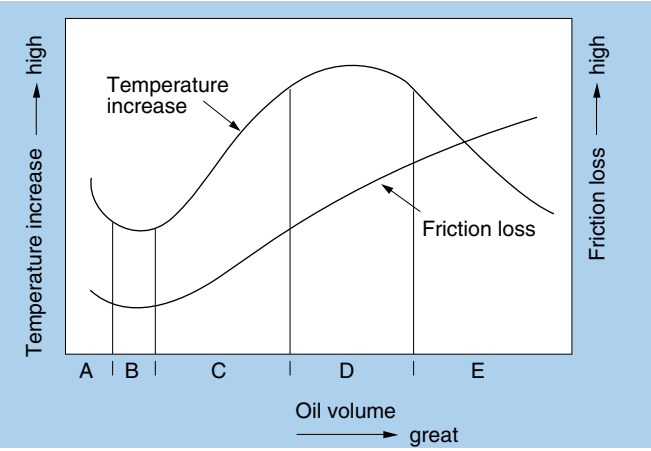

Fig. 6.1

Table 6.1 Oil volume, friction loss, bearing temperature (See Fig. 6.1)

Range	Characteristics	Lubrication method
A	When oil volume is extremely low, direct metallic contact occurs in places between the rolling elements and raceway surfaces. Bearing abrasion and seizing occur.	——
B	A thin oil film develops over all surfaces, friction is minimal and bearing temperature is low.	Grease lubrication, oil mist, air-oil lubrication
C	As oil volume increases, heat buildup is balanced by cooling.	Circulating lubrication
D	Regardless of oil volume, temperature increases at a fixed rate.	Circulating lubrication
E	As oil volume increases, cooling predominates and bearing temperature decreases.	Forced circulation lubrication, Oil jet lubrication

6.2 Characteristics of grease and oil lubricants

Grease and oil are the two general choices for lubrication: it is important to select lubricant with care. Please contact **NTN** Engineering when selecting a lubricant.
The characteristics are show in **table 6.2**.

Table 6.2 Comparison of grease lubrication and oil lubrication characteristics

Concern \ Method	Grease lubrication	Oil lubrication
Handling	◎	△
Reliability	○	◎
Cooling effect	×	○ (Circulation necessary)
Seal structure	○	△
Power loss	○	○
Environment contamination	○	△
High speed rotation	×	○

◎ : Very good ○ : Good △ : Fair × : Poor

6.3 Grease lubrication

Grease type lubricants are relatively easy to handle and require only the simplest sealing devices–for these reasons, grease is the most widely used lubricant for rolling bearings.

6.3.1 Types and characteristics of grease

Lubricating greases are composed of either a mineral oil base or a synthetic oil base. To this base a thickener and other additives are added. The properties of all greases are mainly determined by the kind of base oil used and by the combination of thickening agent and various additives.

Standard greases and their characteristics are listed in **Table 6.3**. As performance characteristics of even the same type of grease will vary widely from brand to brand, it is best to check the manufacturers' data when selecting a grease.

Table 6.3 Grease varieties and characteristics

Grease name	Lithium grease			Sodium grease (fiber grease)	Calcium compound base grease
Thickener	Li soap			Na soap	Ca+Na soap Ca+Li soap
Base oil	Mineral oil	Diester oil	Silicone oil	Mineral oil	Mineral oil
Dropping point ˚C	170 ～ 190	170 ～ 190	200 ～ 250	150 ～ 180	150 ～ 180
Operating temperature range ˚C	-30 ～ +130	-50 ～ +130	-50 ～ +160	-20 ～ +130	-20 ～ +120
Mechanical stability	Excellent	Good	Good	Excellent ～ Good	Excellent ～ Good
Pressure resistance	Good	Good	poor	Good	Excellent ～ Good
Water resistance	Good	Good	Good	Good ～ poor	Good ～ poor
Applications	Widest range of applications. Grease used in all types of rolling bearings.	Excellent low temperature and wear characteristics. Suitable for small sized and miniature bearings.	Suitable for high and low temperatures. Unsuitable for heavy load applications due to low oil film strength.	Some emulsification when water is introduced. Excellent characteristics at relatively high temperatures.	Excellent pressure resistance and mechanical stability. Suitable for bearings receiving shock loads.

Grease name	Aluminum grease	Non-soap base grease Thickener	
Thickener	Al soap	Bentone, silica gel, urea, carbon black, fluorine compounds, etc.	
Base oil	Mineral oil	Mineral oil	Synthetic oil
Dropping point ˚C	70 ～ 90	250 or above	250 or above
Operating temperature range ˚C	-10 ～ +80	-10 ～ +130	-50 ～ +200
Mechanical stability	Good ～ poor	Good	Good
Pressure resistance	Good	Good	Good
Water resistance	Good	Good	Good
Applications	Excellent viscosity characteristics. Suitable for bearings subjected to vibrations.	Can be used in a wide range of low to high temperatures. Shows excellent heat resistance, cold resistance, chemical resistance, and other characteristics when matched with a suitable base oil and thickener. Grease used in all types of rolling bearings.	

6.3.2 Base oil

Natural mineral oil or synthetic oils such as diester oil, silicone oil and fluorocarbon oil are used as grease base oils.

Mainly, the properties of any grease are determined by the properties of the base oil. Generally, greases with a low viscosity base oil are best suited for low temperatures and high speeds; while greases made from high viscosity base oils are best suited for heavy loads.

6.3.3 Thickening agents

Thickening agents are compounded with base oils to maintain the semi-solid state of the grease. Thickening agents consist of two types of bases, metallic soaps and non-soaps. Metallic soap thickeners include: lithium, sodium, calcium, etc.

Non-soap base thickeners are divided into two groups; inorganic (silica gel, bentonite, etc.) and organic (poly-urea, fluorocarbon, etc.).

The various special characteristics of a grease, such as limiting temperature range, mechanical stability, water resistance, etc. depend largely on the type of thickening agent used. For example, a sodium based grease is generally poor in water resistance properties, while greases with bentone, poly-urea and other non-metallic soaps as the thickening agent are generally superior in high temperature properties.

6.3.4 Additives

Various additives are added to greases to improve various properties and efficiency. For example, there are anti-oxidants, high-pressure additives (EP additives), rust preventives, and anti-corrosives.

For bearings subject to heavy loads and/or shock loads, a grease containing high-pressure additives should be used. For comparatively high operating temperatures or in applications where the grease cannot be replenished for long periods, a grease with an oxidation stabilizer is best to use.

6.3.5 Consistency

The consistency of a grease, i.e. the stiffness and liquidity, is expressed by a numerical index.

The NLGI values for this index indicate the relative softness of the grease; the larger the number, the stiffer the grease. The consistency of a grease is determined by the amount of thickening agent used and the viscosity of the base oil. For the lubrication of rolling bearings, greases with the NLGI consistency numbers of 1, 2, and 3 are used.

General relationships between consistency and application of grease are shown in **Table 6.4**.

Table 6.4 Consistency of grease

NLGI Consis-tency No.	JIS (ASTM) Worked penetration	Applications
0	355～385	For centralized greasing use
1	310～340	For centralized greasing use
2	265～295	For general use and sealed bearing use
3	220～250	For general and high temperature use
4	175～205	For special use

6.3.6 Mixing of greases

When greases of different kinds are mixed together, the consistency of the greases will change (usually softer), the operating temperature range will be lowered, and other changes in characteristics will occur. As a general rule, greases with different bases oil, and greases with different thickener agents should never be mixed.

Also, greases of different brands should not be mixed because of the different additives they contain.

However, if different greases must be mixed, at least greases with the same base oil and thickening agent should be selected. But even when greases of the same base oil and thickening agent are mixed, the quality of the grease may still change due to the difference in additives. For this reason, changes in consistency and other qualities should be checked before being applied.

6.3.7 Amount of grease

The amount of grease used in any given situation will depend on many factors relating to the size and shape of the housing, space limitations, bearing's rotating speed and type of grease used.

As a general rule, housings and bearings should be only filled from 30% to 60% of their capacities.

Table 6.5 Bearings space ratio K

Bearing type	Retainer type	K
Ball bearings ❶	Pressed retainer	61
NU-type cylindrical roller bearings ❷	Pressed retainer Machined retainer	50 36
N-type cylindrical roller bearings ❸	Pressed retainer Machined retainer	55 37
Tapered roller bearings	Pressed retainer	46
Spherical roller bearings	Pressed retainer Machined retainer	35 28

❶ Remove 160 series
❷ Remove NU4 series
❸ Remove N4 series

Where speeds are high and temperature rises need to be kept to a minimum, a reduced amount of grease should be used. Excessive amount of grease cause temperature rise which in turn causes the grease to soften and may allow leakage. With excessive grease fills oxidation and deterioration may cause lubricating efficiency to be lowered.

6.4 Solid grease (for bearings with solid grease)

"Solid grease" is a lubricant composed mainly of lubricating grease and ultra-high polymer polyethylene. Solid grease has the same viscosity as grease at normal temperature, but by applying a special heat treatment process, this special grease solidifies retaining a large proportion of the lubricant within the bearing. The result of this solidification is that the grease does not easily leak from the bearing, even when the bearing is subjected to strong vibrations or centrifugal force.

Bearings with solid grease are available in two types: the spot-pack type in which solid grease is injected into the retainer, and the full-pack type in which all empty space around the rolling elements is filled with solid grease.

Spot-pack solid grease is standard for deep groove ball bearings, small diameter ball bearings, and bearing units. Full-pack solid grease is standard for self-aligning ball bearings, self-aligning roller bearings, and needle roller bearings.

Primary advantages:

(1) Clean working environment with minimal grease leakage
(2) Low bearing torque with spot-pack type solid grease

For more details, please refer to the **NTN** special catalog for **Solid grease bearings**.

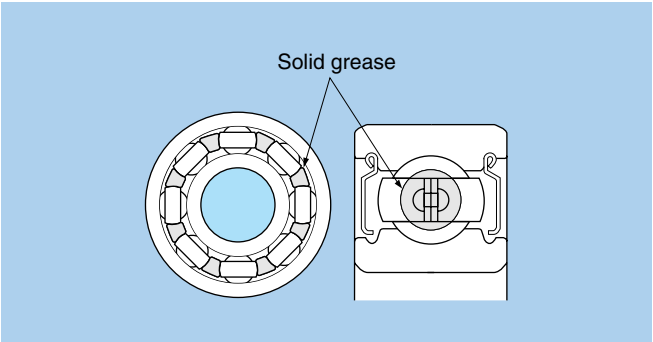

Fig. 6.3 Deep groove ball bearing with spot-pack solid grease (Z shield) (Standard for deep groove ball bearings)

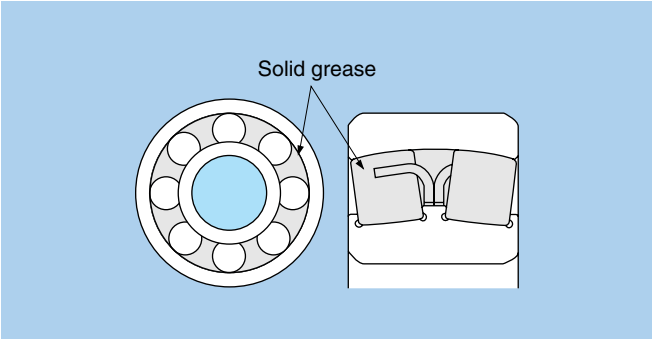

Fig. 6.4 Self-aligning roller bearing with full-pack solid grease (Standard for self-aligning roller bearings)

6.5 Oil lubrication

Oil lubrication is suitable for applications that require bearing-generated heat or heat applied to the bearing from other sources be carried away from the bearing and dissipated to the outside. **Table 6.6** shows the main methods of oil lubrication.

Table 6.6 Oil lubrication methods

Lubrication method	Example	Lubrication method	Example
(Oil bath lubrication) ● Oil bath lubrication is the most generally used method of lubrication and is widely used for low to moderate rotation speed applications. ● For horizontal shaft applications, oil level should be maintained at approximately the center of the lowest rolling element, according to the oil gauge, when the bearing is at rest. For vertical shafts at low speeds, oil level should be maintained at 50 - 80% submergence of the rolling elements.	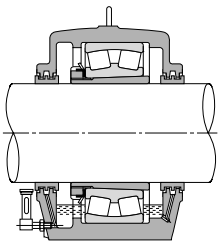	**(Disc lubrication)** ● In this method, a partially submerged disc rotates and pulls oil up into a reservoir from which it then drains down through the bearing, lubricating it.	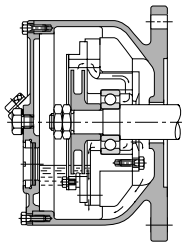
(Oil spray lubrication) ● In this method, an impeller or similar device mounted on the shaft draws up oil and sprays it onto the bearing. This method can be used at considerably high speeds.	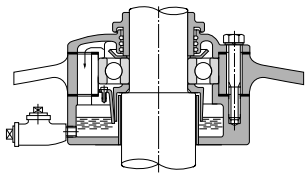	**(Oil mist lubrication)** ● Using pressurized air, lubricating oil is atomized before passing through the bearing. ● Due to the low lubricant resistance, this method is well suited to high speed applications.	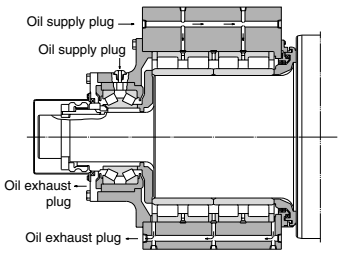
(Drip lubrication) ● In this method, oil is collected above the bearing and allowed to drip down into the housing where it becomes a lubricating mist as it strikes the rolling elements. Another version allows only slight amounts of oil to pass through the bearing. ● Used at relatively high speeds for light to moderate load applications. ● In most cases, oil volume is a few drops per minute.	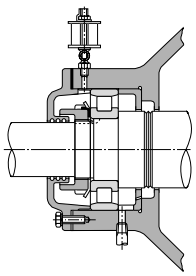	**(Air-oil lubrication)** ● In this method, the required minimum amount of lubricating oil is measured and fed to each bearing at ideal intervals using compressed air. ● With fresh lubricating oil constantly being fed to the bearing, and with the cooling effect of the compressed air, bearing temperature rise can be minimized. ● Because the required oil quantity is infinitesimal, the working environment can be kept clean. Air-oil lubrication units are available from **NTN**.	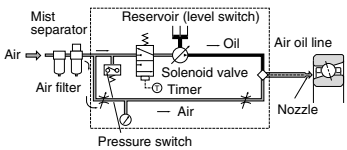
(Circulating lubrication) ● Used for bearing cooling applications or for automatic oil supply systems in which the oil supply is centrally located. ● One of the advantages of this method is that oil cooling devices and filters to maintain oil purity can be installed within the system. ● In order for oil to thoroughly lubricate the bearing, oil inlets and outlets must be provided on opposite sides of the bearing.	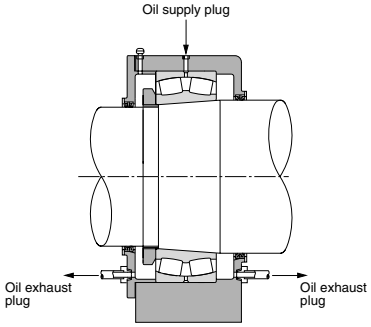	**(Oil jet lubrication)** ● This method lubricates by injecting oil under high pressure directly into the side of the bearing. This is a reliable system for high speed, high temperature or otherwise severe conditions. ● Used for lubricating the bearings in jet engines, gas turbines, and other high speed equipment. ● Under-race lubrication for machine tools is one example of this type of lubrication.	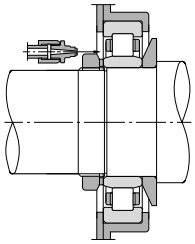

6.5.1 Selection of lubricating oil

Under normal operating conditions, **spindle oil**, **machine oil**, **turbine oil**, and other mineral oils are widely used for the lubrication of rolling bearings. However, for temperatures **above 150˚C or below -30˚C**, synthetic oils such as **diester oil**, **silicone oil**, and **fluorocarbon oil** are used.

For lubricating oils, viscosity is one of the most important properties and it determines an oil's lubricating efficiency. If viscosity is too low, formation of the oil film will be insufficient, and damage will occur to the load carrying surfaces of the bearing. If viscosity is too high, viscous resistance will also be great and result in temperature increases and friction loss. In general, for higher speed applications a lower viscosity oil should be used; for heavier load applications, a higher viscosity oil should be used.

In regard to operating temperature and lubrication, **Table 6.7** lists the required oil viscosity for different types of rolling bearings. **Fig. 6.3** is an oil viscosity–operating temperature comparison chart for the purpose of selecting a lubrication oil with viscosity characteristics appropriate to an application.

Table 6.8 lists the selection standards for lubricating oil viscosity with reference to bearing operating conditions.

Table 6.7 Required lubricating oil viscosity for bearings

Bearing type	Dynamic viscosity mm^2/s
Ball bearings, Cylindrical roller bearings, Needle roller bearings	13
Self-aligning roller bearings, Tapered roller bearings, Needle roller thrust bearings	20
Self-aligning roller thrust bearings	30

6.5.2 Oil quantity

In forced oil lubrication systems, the heat radiated away by the housing and surrounding parts plus the heat carried away by the lubricating oil is approximately equal to the amount of heat generated by the bearing and other sources.

For standard housing applications, the quantity of oil required can be found by formula (6.2).

$$Q = K \cdot q \quad \cdots\cdots (6.2)$$

where,

Q: Quantity of oil for one bearing cm^3/min.
K: Allowable oil temperature rise factor (**Table 6.9**)
q: Minimum oil quantity cm^3/min. (**Fig. 6.4**)

Because the amount of heat radiated will vary according to the type of housing, for actual operation it is advisable that the quantity of oil calculated by formula (6.2) be multiplied by a factor or 1.5 or 2.0. Then, the amount of oil can be adjusted to correspond to actual operating conditions.

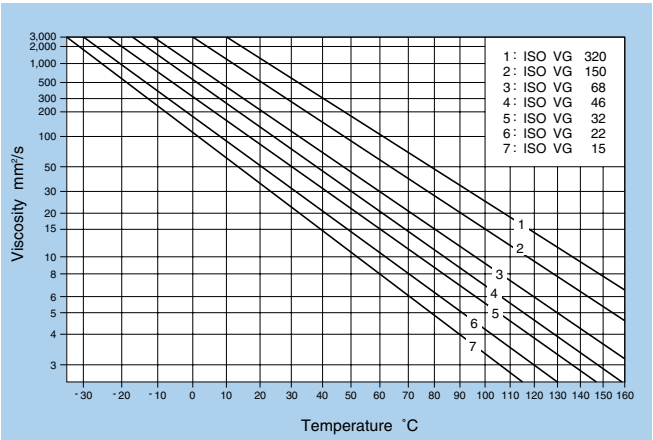

Fig. 6.3 Relation between lubricating oil viscosity and temperature

Table 6.8 Selection standards for lubricating oils (reference)

Bearing operating temperature ˚C	dn-value	Lubricating oil ISO viscosity grade (VG)		Suitable bearing
		Normal load	Heavy load or shock load	
−30～ 0	Up to allowable speed limiting	22, 32	46	All types
0～ 60	15,000 Up to	46, 68	100	All types
	15,000 ～80,000	32, 46	68	All types
	80,000 ～150,000	22, 32	32	All types but thrust ball bearings
	150,000～500,000	10	22, 32	Single row radial ball bearings, cylindrical roller bearings
60～100	15,000 Up to	150	220	All types
	15,000 ～80,000	100	150	All types
	80,000 ～150,000	68	100, 150	All types but thrust ball bearings
	150,000～500,000	32	68	Single row radial ball bearings, cylindrical roller bearings
100 ～150	Up to allowable speed limiting	320		All types
0～ 60	Up to allowable speed limiting	46, 68		Self-aligning roller bearings
60～100	Up to allowable speed limiting	150		

Notes: 1. Applied when lubrication method is either oil bath or circulating lubrication.
2. Please consult **NTN** Engineering in cases where operating conditions fall outside the range covered by this table.

Table 6.9 Factor K

Expelled oil temp minus supplied oil temp ˚C	K
10	1.5
15	1
20	0.75
25	0.6

Furthermore, if it is assumed for calculation purposes that no heat is radiated by the housing, and that all bearing heat is removed by the oil, then the value in **Fig. 6.3** for shaft diameter, $d = 0$, regardless of actual shaft diameter.

(Example) For tapered roller bearing **30220U** mounted on a flywheel shaft with a radial load of 9.5 kN (969 kgf), operating at 1,800 min^{-1}, what is the amount of lubricating oil required to keep the bearing temperature rise below 15˚C.

$d = 100$ mm,
$dn = 100 \times 1{,}800 = 18 \times 10^4$
From **Fig. 6.4** $q = 180 \text{cm}^3/\text{min}$
Assume the bearing temperature is approximately equal to the expelled oil temperature, from **Table 6.9**, since $K = 1$
$Q = 1 \times 180 = 180 \text{cm}^3/\text{min}$

6.5.3 Relubrication intervals

The intervals at which lubricating oil should be changed varies depending upon operating conditions, oil quantity, and type of oil used. In general, for oil bath lubrication where the operating temperature is 50˚C or less, oil should be replaced once a year. When the operating temperature is between 80˚C – 100˚C, oil should be replaced at least every three months. For important equipment, it is advisable that lubricating efficiency and oil purity deterioration be checked regularly to determine when oil replacement is necessary.

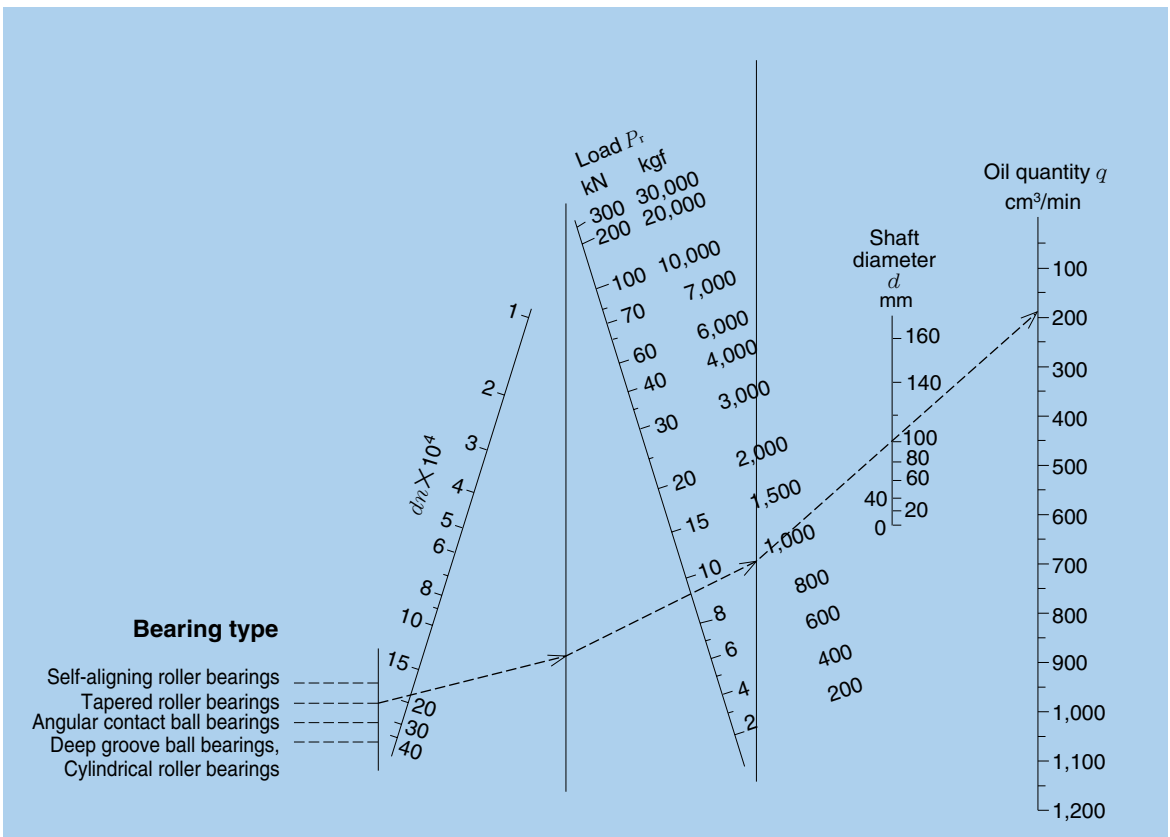

Fig. 6.4 Oil quantity guidelines

7. Bearing Materials

7.1 Raceway and rolling element materials

While the contact surfaces of a bearing's raceways and rolling elements are subjected to repeated heavy stress, they still must maintain high precision and rotational accuracy. To accomplish this, the raceways and rolling elements must be made of a material that has high hardness, is resistant to rolling fatigue, is wear resistant, and has good dimensional stability. The most common cause of fatigue cracking in bearings is the inclusion of non-metallic impurities in the steel. By using pure materials low in these non-metallic impurities, the rolling fatigue life of the bearing is lengthened.

For all **NTN** bearings, steel low in oxygen content and non-metallic impurities, then refined by a vacuum degassing process as well as outside hearth smelting, is used. For bearings requiring especially high reliability and long life, steels of even higher in purity, such as vacuum smelted steel (VIM, VAR, CEVM) and electro-slag melted steel (ESR), are used.

1) High/mid carbon alloy steel

In general, steel varieties which can be hardened not just on the surface but also deep hardened by the so-called "through hardening method" are used for the raceways and rolling elements of bearings. Foremost among these is high carbon chromium bearing steel, which is widely used. For large type bearings and bearings with large cross sectional dimensions, induction hardened bearing steel incorporating manganese or molybdenum is used. Also in use is mid-carbon chromium steel incorporating silicone and manganese, which gives it hardening properties comparable to high carbon chromium steel.

2) Case hardened (carburized) steel

Because of its combination of a hard surface layer which has been carburized and hardened to an appropriate depth, and a relatively pliable inner core, case hardened steel has excellent efficiency against shock loads. **NTN** uses case hardened steel for almost all of its tapered roller bearings. In terms of case hardened steel for **NTN**'s other bearings, chromium steel and chrome molybdenum steel are used for small to medium sized bearings, and nickel chrome molybdenum steel is used for large sized bearings.

3) Heat resistant bearing steel

When bearings made of ordinary high carbon chromium steel which have undergone standard heat treatment are used at temperatures above 120˚C for long durations, unacceptably large dimensional changes can occur. For this reason, a dimension stabilizing treatment (TS treatment) has been devised for very high temperature applications. Through application of this dimension stabilizing treatment, shortening of rolling fatigue life due to decreases in bearing hardness at high temperatures can be avoided. (refer to page insert A-6 1.3.2)

For standard high temperature bearings used at temperatures from 150˚C – 200˚C, the addition of silicone to the steel improves heat resistance and results in a bearing with excellent rolling fatigue life with minimal dimensional change or softening at high temperatures.

A variety of heat resistant steels are also incorporated in bearings to minimize softening and dimensional changes when used at high temperatures. Two of these are high speed molybdenum steel and high speed tungsten steel. For bearings requiring heat resistance in high speed applications, there is also heat resistant case hardening molybdenum steel.

4) Corrosion resistant bearing steel

For applications requiring high corrosion resistance, stainless steel is used. To achieve this corrosion resistance a large proportion of the alloying element chrome is added to martensite stainless steel.

5) Induction hardened steel

Besides the use of surface hardening steel, induction hardening is also utilized for bearing raceway surfaces, and for this purpose mid-carbon steel is used for its lower carbon content instead of through hardened steel. For induction hardening of the deep layers required for larger bearings and bearings with large surface dimensions, mid-carbon steel is fortified with chrome and molybdenum.

6) Other bearing materials

For ultra high speed applications and applications requiring very high level corrosion resistance, ceramic bearing materials such as Si_3N_4 are also available.

7.2 Cage materials

Bearing cage materials must have the strength to withstand rotational vibrations and shock loads. These materials must also have a low friction coefficient, be light weight, and be able to withstand bearing operation temperatures.

For small and medium sized bearings, pressed cages of cold or hot rolled steel with a low carbon content of approx. 0.1% are used. However, depending on the application, austenitic stainless steel is also used.

For large bearings, machined cages of machine structural carbon steel or high tensile cast brass are widely used, although aluminum alloy and other material cages are also available.

For aircraft engine bearings, high tensile brass, mid-carbon nickel, chrome, or molybdenum steel is used after undergoing various heat treatments and high temperature tempering. The sliding properties of these materials may also be enhanced when silver plated.

Injection molded plastic cages are now widely used: most are made from fiberglass reinforced heat resistant polyamide resin. Plastic cages are light weight, corrosion resistant and have excellent damping and sliding properties. Heat resistant polyamide resins now enable the production of cages that perform well in applications ranging between -40˚C – 120˚C. However, they are not recommended for use at temperatures exceeding 120˚C.

MEMO

General Bearings

INDEX OF BEARING TABLES

Deep Groove Ball Bearings ····· B- 5

Angular Contact Ball Bearings ····· B-15

Angular contact ball bearings (single, duplex) ····· B-18

Double row angular contact ball bearings ····· B-32

Cylindrical Roller Bearings ····· B-37

Single row cylindrical roller bearings ····· B-40

Multi-row cylindrical roller bearings ····· B-56

4-row cylindrical roller bearings ····· B-64

SL type cylindrical roller bearings ····· B-80

SL type cylindrical roller bearings for sheaves ····· B-84

Tapered Roller Bearings ····· B- 89

Single row tapered roller bearings (Metric system sizes) ····· B- 96

Single row tapered roller bearings (Inch system sizes) ····· B-106

Double row tapered roller bearings (outside direction) (Metric system sizes) ··· B-124

Double row tapered roller bearings (outside direction) (Inch system sizes) ····· B-140

Double row tapered roller bearings (inside direction) (Metric system sizes) ·····B-152
Double row tapered roller bearings (inside direction) (Inch system sizes) ·····B-162
Double row steep slope tapered roller bearings (outside direction) ·····B-170
Double row steep slope tapered roller bearings (inside direction) ·····B-172
Four row tapered roller bearings ·····B-180
Sealed four row tapered roller bearings ·····B-200

Spherical Roller Bearings ·····B-203

Thrust Bearings ·····B-227
Thrust bearings ·····B-230
Thrust roller bearings ·····B-234
Tapered roller thrust bearings (single direction type) ·····B-240
Tapered roller thrust bearings (double direction type) ·····B-244
Self-aligning roller thrust bearings ·····B-246

Deep Groove Ball Bearings

1. Structure and Characteristics

A widely used bearing, the deep groove ball bearing takes its name from the track formed on both the inner and outer rings of the bearing. The bearings can sustain radial and axial loads and the resultant forces of these loads and they are suitable for high speed operation.

The dimensional table below represents the various cage models and special shapes. **Drawing A** is the pressed cage; **drawing B** shows the machined cage; **drawings C** through **F** show the position and shape of the notch on the inner ring; and **drawing G** shows a bearing with the key groove on the inner ring. Pressed cages are generally used, though machined cages are used for larger sized bearings, or bearings for high speed rotation.

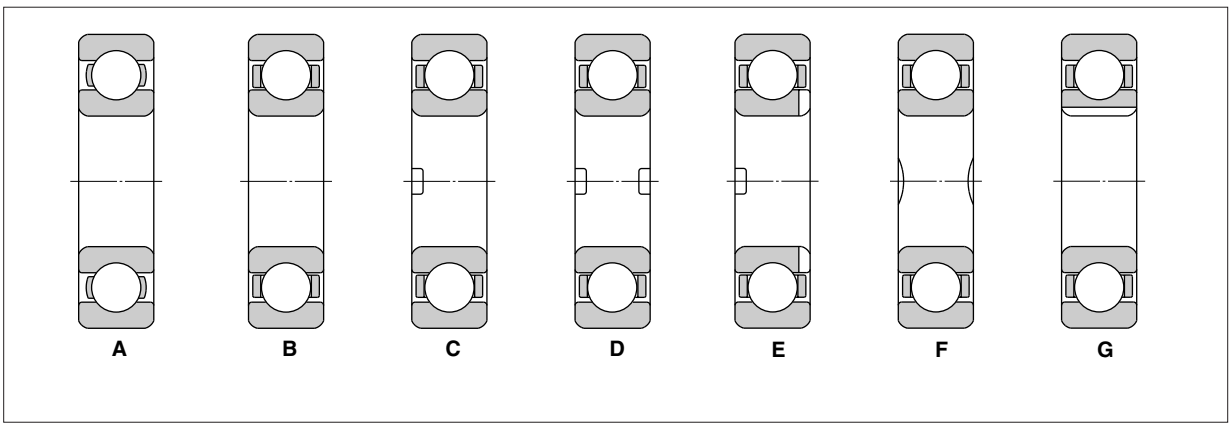

Deep groove ball bearings drawing

2. Dimensional Accuracy/Rotation Accuracy

Refer to Table 3.3 (Page A-12)

3. Recommended Fitting

Refer to Table 4.2 (Page A-24)

4. Bearing Internal Clearance

Refer to Table 5.2 (Page A-30)

5. Permissible slant angle

0.0006-0.003 radian

6. General Operating Cautions

Slippage between the balls and raceways may occur when bearings are operated under small loads (about $F_r \leqq 0.01C_{or}$) and may cause smearing. This is most apparent when using large size deep groove ball bearings due to the large cage mass. Please consult **NTN** Engineering for further details.

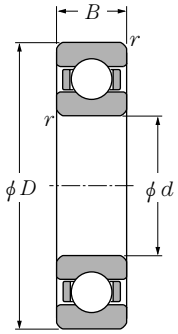

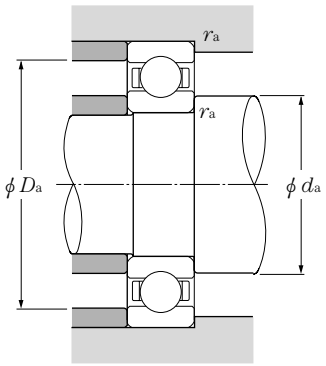

Equivalent bearing load

dynamic

$P_r = XF_r + YF_a$

$\frac{F_a}{C_{or}}$	e	$\frac{F_a}{F_r} \leqq e$		$\frac{F_a}{F_r} > e$	
		X	Y	X	Y
0.010	0.18	1	0	0.56	2.46
0.020	0.20				2.14
0.040	0.24				1.83
0.070	0.27				1.61
0.10	0.29				1.48
0.15	0.32				1.35
0.20	0.35				1.25
0.30	0.38				1.13
0.40	0.41				1.05
0.50	0.44				1.00

static

$P_{or} = 0.6F_r + 0.5F_a$

When $P_{or} < F_r$ use $P_{or} = F_r$

d 100～140mm

Boundary dimensions mm				Basic load ratings dynamic kN	Basic load ratings static kN	Basic load ratings dynamic kgf	Basic load ratings static kgf	Bearing numbers	Drawing❶ No.	Abutment and fillet dimensions mm			Mass kg
										d_a	D_a	r_{as}	
d	D	B	$r_{s\,min}$❷	C_r	C_{or}	C_r	C_{or}			min	max	max	(approx.)
100	125	13	1	19.6	21.2	2,000	2,160	6820	A	105	120	1	0.31
	140	20	1.1	41	39.5	4,200	4,050	6920	A	106.5	133.5	1	0.78
	150	16	1	35	36.5	3,600	3,750	16020	A	105	145	1	0.91
	150	24	1.5	60	54	6,150	5,500	6020	A	108	142	1.5	1.15
	180	34	2.1	122	93	12,500	9,450	6220	A	111	169	2	3.14
	215	47	3	173	141	17,600	14,400	6320	A	113	202	2.5	7
105	130	13	1	19.8	22	2,020	2,240	6821	A	110	125	1	0.33
	145	20	1.1	42.5	42	4,300	4,300	6921	A	111.5	138.5	1	0.81
	160	18	1	52	50.5	5,300	5,150	16021	A	110	155	1	1.2
	160	26	2	72.5	65.5	7,400	6,700	6021	A	114	151	2	1.59
	190	36	2.1	133	105	13,600	10,700	6221	A	116	179	2	3.7
	225	49	3	184	153	18,700	15,700	6321	A	118	212	2.5	8.05
110	140	16	1	24.9	28.2	2,540	2,880	6822	A	115	135	1	0.51
	150	20	1.1	43.5	44.5	4,450	4,550	6922	A	116.5	143.5	1	0.85
	170	19	1	57.5	56.5	5,850	5,800	16022	A	115	165	1	1.46
	170	28	2	82	73	8,350	7,450	6022	A	119	161	2	1.96
	200	38	2.1	144	117	14,700	11,900	6222	A	121	189	2	4.36
	240	50	3	205	179	20,900	18,300	6322	A	123	227	2.5	9.54
120	150	16	1	28.9	33	2,950	3,350	6824	A	125	145	1	0.55
	165	22	1.1	53	54	5,400	5,500	6924	A	126.5	158.5	1	1.15
	180	19	1	63	63.5	6,450	6,450	16024	A	125	175	1	1.56
	180	28	2	85	79.5	8,650	8,100	6024	A	129	171	2	2.07
	215	40	2.1	155	131	15,900	13,400	6224	A	131	204	2	5.15
	260	55	3	207	185	21,100	18,800	6324	A	133	247	2.5	12.4
130	165	18	1.1	37	41	3,750	4,200	6826	A	136.5	158.5	1	0.8
	180	24	1.5	65	67.5	6,650	6,850	6926	A	138	172	1.5	1.52
	200	22	1.1	80	79.5	8,150	8,100	16026	A	136.5	193.5	1	2.31
	200	33	2	106	101	10,800	10,300	6026	A	139	191	2	3.16
	230	40	3	167	146	17,000	14,900	6226	A	143	217	2.5	5.82
	280	58	4	229	214	23,400	21,800	6326	A	146	264	3	15.3
140	175	18	1.1	38.5	44.5	3,900	4,550	6828	A	146.5	168.5	1	0.85
	190	24	1.5	66.5	71.5	6,800	7,300	6928	A	148	182	1.5	1.62
	210	22	1.1	82	85	8,350	8,650	16028	A	146.5	203.5	1	2.45
	210	33	2	110	109	11,200	11,100	6028	A	149	201	2	3.35

❶ Drawing details are shown in Page B-5.
❷ Smallest allowable dimension for chamfer dimension r.

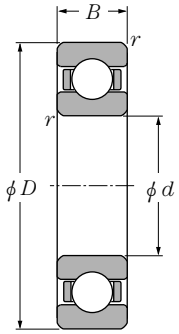

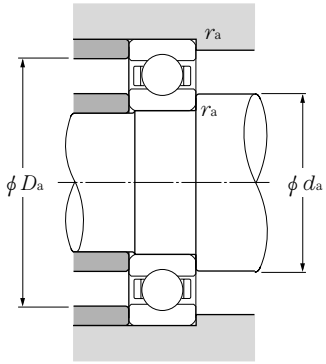

Equivalent bearing load

dynamic

$P_r = XF_r + YF_a$

$\frac{F_a}{C_{or}}$	e	$\frac{F_a}{F_r} \leqq e$		$\frac{F_a}{F_r} > e$	
		X	Y	X	Y
0.010	0.18	1	0	0.56	2.46
0.020	0.20				2.14
0.040	0.24				1.83
0.070	0.27				1.61
0.10	0.29				1.48
0.15	0.32				1.35
0.20	0.35				1.25
0.30	0.38				1.13
0.40	0.41				1.05
0.50	0.44				1.00

static

$P_{or} = 0.6F_r + 0.5F_a$

When $P_{or} < F_r$ use $P_{or} = F_r$

d 140～180mm

Boundary dimensions mm				Basic load ratings dynamic kN		Basic load ratings static kgf		Bearing numbers	Drawing ❶ No.	Abutment and fillet dimensions mm			Mass kg
d	D	B	$r_{s\,min}$ ❷	C_r	C_{or}	C_r	C_{or}			d_a min	D_a max	r_{as} max	(approx.)
140	250	42	3	166	150	17,000	15,300	6228	A	153	237	2.5	7.57
	300	62	4	253	246	25,800	25,100	6328	A	156	284	3	18.5
145	220	38	2.5	126	115	12,800	11,800	SC2951	B	157	208	2	5.07
150	190	20	1.1	47.5	55	4,850	5,600	6830	A	156.5	183.5	1	1.16
	210	28	2	85	90.5	8,650	9,200	6930	A	159	201	2	2.47
	225	24	1.1	96.5	101	9,850	10,300	16030	A	156.5	218.5	1	3.07
	225	35	2.1	126	126	12,800	12,800	6030	A	161	214	2	4.08
	230	35	2.5	120	118	12,300	12,100	SC3002	C	162	218	2	5.18
	230	35	2.5	120	118	12,300	12,100	SC3007	G	162	218	2	5.18
	270	45	3	176	168	18,000	17,100	6230	A	163	257	2.5	9.41
	320	65	4	274	284	28,000	28,900	6330	A	166	304	3	22
160	200	20	1.1	48.5	57	4,950	5,800	6832	A	166.5	193.5	1	1.23
	220	28	2	87	96	8,850	9,800	6932	A	169	211	2	2.61
	229.5	33	2.5	108	111	11,000	11,300	SC3209	B	172	218	2	4.35
	229.5	36	2.5	120	119	12,200	12,100	SC3207	B	172	218	2	4.75
	230	33	2.5	108	111	11,000	11,300	SC3210	B	172	218	2	4.39
	240	25	1.5	99	108	10,100	11,000	16032	A	168	232	1.5	3.64
	240	38	2.1	143	144	14,500	14,700	6032	A	171	229	2	5.05
	290	48	3	185	186	18,900	19,000	6232	A	173	277	2.5	11.7
	340	68	4	278	286	28,300	29,200	6332	A	176	324	3	26
170	215	22	1.1	60	70.5	6,100	7,200	6834	A	176.5	208.5	1	1.63
	230	28	2	86	95.5	8,750	9,750	6934	A	179	221	2	2.74
	260	28	1.5	119	128	12,100	13,100	16034	A	178	252	1.5	4.93
	260	42	2.1	168	172	17,200	17,600	6034	A	181	249	2	6.76
	310	52	4	212	223	21,700	22,800	6234	A	186	294	3	14.5
	360	72	4	325	355	33,500	36,000	6334	A	186	344	3	30.7
180	225	22	1.1	60.5	73	6,200	7,450	6836	B	186.5	218.5	1	2.03
	250	33	2	110	119	11,200	12,200	6936	B	189	241	2	4.76
	265	33	2.5	113	127	11,500	13,000	SC3605	B	192	253	2	6.08
	280	31	2	117	134	11,900	13,600	16036	A	189	271	2	6.49
	280	46	2.1	189	199	19,300	20,300	6036	A	191	269	2	8.8
	320	52	4	227	241	23,200	24,600	6236	A	196	304	3	15.1
	380	75	4	355	405	36,000	41,500	6336	A	196	364	3	35.6

❶ Drawing details are shown in Page B-5.
❷ Smallest allowable dimension for chamfer dimension r.

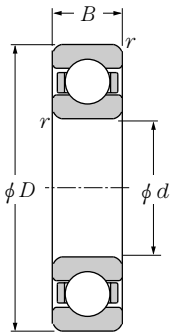

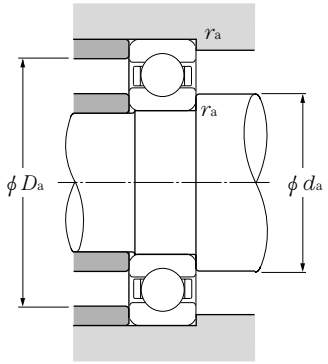

Equivalent bearing load

dynamic

$P_r = XF_r + YF_a$

$\frac{F_a}{C_{or}}$	e	$\frac{F_a}{F_r} \leqq e$		$\frac{F_a}{F_r} > e$	
		X	Y	X	Y
0.010	0.18	1	0	0.56	2.46
0.020	0.20				2.14
0.040	0.24				1.83
0.070	0.27				1.61
0.10	0.29				1.48
0.15	0.32				1.35
0.20	0.35				1.25
0.30	0.38				1.13
0.40	0.41				1.05
0.50	0.44				1.00

static

$P_{or} = 0.6F_r + 0.5F_a$

When $P_{or} < F_r$ use $P_{or} = F_r$

d 190～260mm

Boundary dimensions mm				Basic load ratings dynamic kN	Basic load ratings static kN	Basic load ratings dynamic kgf	Basic load ratings static kgf	Bearing numbers	Drawing❶ No.	Abutment and fillet dimensions mm			Mass kg
d	D	B	$r_{s\,min}$❷	C_r	C_{or}	C_r	C_{or}			d_a min	D_a max	r_{as} max	(approx.)
190	240	24	1.5	73	88	7,450	9,000	6838	B	198	232	1.5	2.62
	260	33	2	113	127	11,500	13,000	6938	B	199	251	2	4.98
	269.5	33	2.5	117	134	11,900	13,600	SC3805	G	202	258	2	5.87
	290	31	2	134	156	13,700	15,900	16038	A	199	281	2	6.77
	290	46	2.1	197	215	20,100	21,900	6038	A	201	279	2	9.18
	340	55	4	255	281	26,000	28,700	6238	A	206	324	3	18.2
	400	78	5	355	415	36,000	42,500	6338	A	210	380	4	41
195	270	35	2.5	130	147	13,300	15,000	SC3904	B	207	258	2	5.94
200	250	24	1.5	74	91.5	7,550	9,300	6840	B	208	242	1.5	2.73
	280	38	2.1	157	168	16,000	17,100	6940	B	211	269	2	7.1
	310	34	2	142	160	14,400	16,300	16040	A	209	301	2	8.68
	310	51	2.1	218	243	22,200	24,800	6040	A	211	299	2	11.9
	360	58	4	269	310	27,400	31,500	6240	A	216	344	3	21.6
	420	80	5	410	500	42,000	51,000	6340	A	220	400	4	46.3
220	270	24	1.5	76.5	98	7,800	10,000	6844	B	228	262	1.5	3
	300	38	2.1	160	180	16,400	18,400	6944	B	231	289	2	7.69
	309.5	38	2.5	176	202	18,000	20,600	SC4401	B	232	298	2	8.77
	319.5	46	2.5	193	220	19,700	22,400	SC4405	B	232	308	2	12
	340	37	2.1	181	216	18,500	22,000	16044	A	231	329	2	11.3
	340	56	3	241	289	24,600	29,400	6044	A	233	327	2.5	15.7
	400	65	4	297	365	30,500	37,000	6244	A	236	384	3	30.2
	460	88	5	410	520	42,000	53,000	6344	A	240	440	4	60.8
230	329.5	40	2.5	191	227	19,500	23,100	SC4605	B	242	318	2	10.8
	339.5	45	3	224	266	22,800	27,200	SC4609	G	244	326	2.5	13.7
240	300	28	2	85	112	8,650	11,400	6848	B	249	291	2	4.6
	320	38	2.1	170	203	17,300	20,700	6948	B	251	309	2	8.28
	360	37	2.1	178	217	18,200	22,100	16048	A	251	349	2	12.1
	360	56	3	249	310	25,400	32,000	6048	A	253	347	2.5	16.8
	440	72	4	360	470	36,500	48,000	6248	B	258	422	3	51.7
	500	95	5	440	590	45,000	60,000	6348	B	262	478	4	93.6
250	349.5	46	2.5	214	262	21,800	26,700	SC5003	B	262	338	2	13.4
260	320	28	2	87	120	8,900	12,200	6852	B	269	311	2	5

❶ Drawing details are shown in Page B-5.
❷ Smallest allowable dimension for chamfer dimension r.

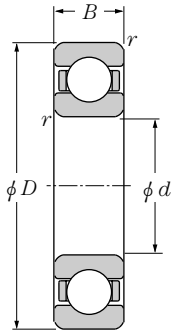

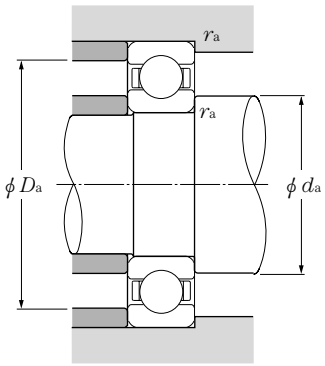

Equivalent bearing load

dynamic

$P_r = XF_r + YF_a$

$\frac{F_a}{C_{or}}$	e	$\frac{F_a}{F_r} \leqq e$		$\frac{F_a}{F_r} > e$	
		X	Y	X	Y
0.010	0.18	1	0	0.56	2.46
0.020	0.20				2.14
0.040	0.24				1.83
0.070	0.27				1.61
0.10	0.29				1.48
0.15	0.32				1.35
0.20	0.35				1.25
0.30	0.38				1.13
0.40	0.41				1.05
0.50	0.44				1.00

static

$P_{or} = 0.6F_r + 0.5F_a$

When $P_{or} < F_r$ use $P_{or} = F_r$

d 260～340mm

Boundary dimensions mm				Basic load ratings dynamic kN	static kN	dynamic kgf	static kgf	Bearing numbers	Drawing ❶ No.	Abutment and fillet dimensions mm			Mass kg
										d_a	D_a	r_{as}	
d	D	B	$r_{s\,min}$ ❷	C_r	C_{or}	C_r	C_{or}			min	max	max	(approx.)
260	360	46	2.1	222	280	22,600	28,500	6952	B	271	349	2	13.9
	379.5	56	4	253	320	25,800	32,500	SC5206	G	278	362	3	20.8
	400	44	3	227	299	23,200	30,500	16052	A	273	387	2.5	18.5
	400	65	4	291	375	29,700	38,500	6052	A	276	384	3	25
	480	80	5	400	540	41,000	55,000	6252	B	282	458	4	65.7
	540	102	6	505	710	51,500	72,500	6352	B	288	512	5	116
280	350	33	2	137	177	13,900	18,100	6856	B	289	341	2	7.4
	360	38	2.5	147	191	14,900	19,500	SC5605	B	292	348	2	9.47
	380	46	2.1	227	299	23,200	30,500	6956	B	291	369	2	14.8
	420	44	3	232	315	23,700	32,500	16056	B	293	407	2.5	23
	420	65	4	325	420	33,000	43,000	6056	B	296	404	3	31
	500	80	5	440	600	44,500	61,000	6256	B	302	478	4	70.9
	580	108	6	530	760	54,000	77,500	6356	B	308	552	5	142
290	419.5	60	5	277	375	28,300	38,500	SC5803	G	312	398	4	26.8
300	380	38	2.1	162	210	16,500	21,500	6860	B	311	369	2	10.5
	420	56	3	276	375	28,200	38,500	6960	B	313	407	2.5	23.5
	460	50	4	292	410	29,800	42,000	16060	B	316	444	3	32.5
	460	74	4	355	480	36,000	49,000	6060	B	316	444	3	43.8
	540	85	5	465	670	47,500	68,500	6260	B	322	518	4	88.9
310	429.5	60	4	275	380	28,000	38,500	SC6201	B	328	412	3	25.8
	450	50	4	286	420	29,200	42,500	SC6203	B	328	432	3	25.9
320	400	38	2.1	168	228	17,200	23,200	6864	B	331	389	2	10.9
	440	56	3	285	405	29,000	41,000	6964	B	333	427	2.5	24.8
	449.5	56	3	276	395	28,200	40,500	SC6406	B	334	436	2.5	27.6
	470	70	4	330	475	34,000	48,500	SC6403	B	338	452	3	40.4
	480	50	4	300	440	30,500	45,000	16064	B	336	464	3	34.2
	480	74	4	370	530	38,000	54,000	6064	B	336	464	3	46.1
	580	92	5	530	805	54,500	82,500	6264	B	342	558	4	110
340	420	38	2.1	170	236	17,400	24,000	6868	2	351	409	2	11.5
	460	56	3	293	430	29,800	44,000	6968	B	353	447	2.5	26.2
	489.5	60	5	290	435	29,600	44,000	SC6802	B	362	468	4	36.2
	520	57	4	340	515	35,000	52,500	16068	B	356	504	3	47.1
	520	82	5	420	610	42,500	62,500	6068	B	360	500	4	61.8

❶ Drawing details are shown in Page B-5.
❷ Smallest allowable dimension for chamfer dimension r.

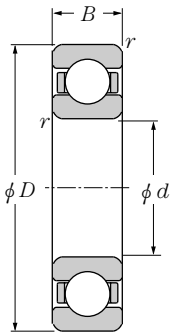

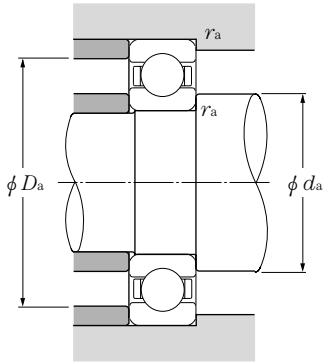

Equivalent bearing load

dynamic

$P_r = XF_r + YF_a$

$\frac{F_a}{C_{or}}$	e	$\frac{F_a}{F_r} \leqq e$		$\frac{F_a}{F_r} > e$	
		X	Y	X	Y
0.010	0.18	1	0	0.56	2.46
0.020	0.20				2.14
0.040	0.24				1.83
0.070	0.27				1.61
0.10	0.29				1.48
0.15	0.32				1.35
0.20	0.35				1.25
0.30	0.38				1.13
0.40	0.41				1.05
0.50	0.44				1.00

static

$P_{or} = 0.6F_r + 0.5F_a$

When $P_{or} < F_r$ use $P_{or} = F_r$

d 340～480mm

Boundary dimensions mm				Basic load ratings dynamic kN	static kN	dynamic kgf	static kgf	Bearing numbers	Drawing❶ No.	Abutment and fillet dimensions mm			Mass kg
										d_a	D_a	r_{as}	
d	D	B	$r_{s\,min}$❷	C_r	C_{or}	C_r	C_{or}			min	max	max	(approx.)
340	620	92	6	530	820	54,000	83,500	**6268**	B	368	592	5	129
355.6	469.9	57.15	5	233	340	23,800	34,500	**SC7101**	B	377.5	448	4	26.3
360	440	38	2.1	187	258	19,100	26,300	**6872**	B	371	429	2	12.3
	480	56	3	300	455	30,500	46,500	**6972**	B	373	467	2.5	27.5
	509.5	70	5	340	515	34,500	52,500	**SC7205**	B	382	488	4	45
	540	57	4	350	550	36,000	56,000	**16072**	B	376	524	3	49.3
	540	82	5	440	670	44,500	68,000	**6072**	B	380	520	4	64.7
	650	95	6	555	905	57,000	92,000	**6272**	B	388	622	5	145
380	480	46	2.1	231	340	23,600	34,500	**6876**	B	391	469	2	19.7
	520	65	4	325	510	33,000	52,000	**6976**	B	396	504	3	39.8
	560	57	4	360	590	37,000	60,000	**16076**	B	398	542	3	50.1
	560	82	5	455	725	46,500	74,000	**6076**	B	400	540	4	67.5
400	500	46	2.1	226	340	23,100	34,500	**6880**	B	411	489	2	20.6
	540	65	4	335	535	34,000	54,500	**6980**	B	416	524	3	41.6
	600	63	5	370	620	38,000	63,000	**16080**	B	422	578	4	65.8
	600	90	5	510	825	52,000	84,000	**6080**	B	420	580	4	87.6
	720	130	6	610	1,080	62,000	110,000	**SC8002**	D	428	692	5	226
420	520	46	2.1	260	405	26,500	41,500	**6884**	B	431	509	2	21.6
	560	65	4	340	560	35,000	57,000	**6984**	B	436	544	3	43.4
	620	90	5	530	895	54,000	91,000	**6084**	B	440	600	4	91.1
440	540	46	2.1	264	420	26,900	43,000	**6888**	B	451	529	2	22.5
	599	80	4	425	720	43,000	73,500	**SC8803**	B	458	581	3	64
	600	74	4	365	615	37,500	63,000	**6988**	B	456	584	3	60
	650	94	6	525	900	53,500	92,000	**6088**	B	468	622	5	104
450	629	80	4	435	770	44,500	78,500	**SC9001**	F	468	611	3	76
460	580	56	3	315	515	32,000	52,500	**6892**	B	473	567	2.5	34.8
	620	74	4	375	645	38,500	66,000	**6992**	B	476	604	3	62.2
	680	100	6	605	1,080	62,000	110,000	**6092**	B	488	652	5	122
480	600	56	3	320	540	32,500	55,000	**6896**	B	493	587	2.5	36.2
	650	78	5	430	770	44,000	78,500	**6996**	B	500	630	4	73

❶ Drawing details are shown in Page B-5.
❷ Smallest allowable dimension for chamfer dimension r.

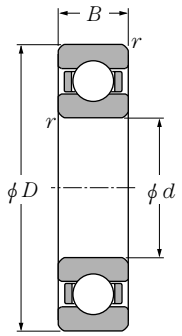

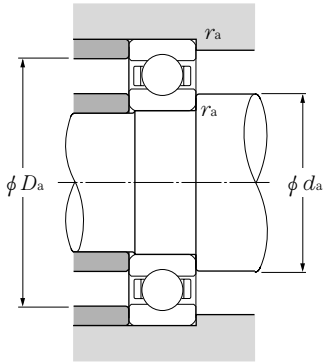

Equivalent bearing load

dynamic

$P_r = XF_r + YF_a$

$\frac{F_a}{C_{or}}$	e	$\frac{F_a}{F_r} \leqq e$		$\frac{F_a}{F_r} > e$	
		X	Y	X	Y
0.010	0.18	1	0	0.56	2.46
0.020	0.20				2.14
0.040	0.24				1.83
0.070	0.27				1.61
0.10	0.29				1.48
0.15	0.32				1.35
0.20	0.35				1.25
0.30	0.38				1.13
0.40	0.41				1.05
0.50	0.44				1.00

static

$P_{or} = 0.6F_r + 0.5F_a$

When $P_{or} < F_r$ use $P_{or} = F_r$

d 480～710mm

Boundary dimensions mm				Basic load ratings dynamic kN	static kN	dynamic kgf	static kgf	Bearing numbers	Drawing ❶ No.	Abutment and fillet dimensions mm			Mass kg
										d_a	D_a	r_{as}	
d	D	B	$r_{s\,min}$ ❷	C_r	C_{or}	C_r	C_{or}			min	max	max	(approx.)
480	700	100	6	605	1,090	61,500	111,000	**6096**	B	508	672	5	126
500	620	56	3	325	560	33,500	57,000	**68/500**	B	513	607	2.5	37.5
	670	78	5	445	805	45,500	82,500	**69/500**	B	520	650	4	75.5
	689	100	5	545	980	55,500	100,000	**SC10006**	B	522	667	4	103
	720	100	6	630	1,170	64,000	120,000	**60/500**	B	528	692	5	130
520	719	100	5	560	1,050	57,000	107,000	**SC10403**	B	542	697	4	118
530	650	56	3	330	580	34,000	59,500	**68/530**	B	543	637	2.5	39.5
	710	82	5	455	845	46,500	86,000	**69/530**	B	552	688	4	89.1
	780	112	6	645	1,270	66,000	129,000	**60/530**	B	558	752	5	178
560	680	56	3	335	600	34,000	61,500	**68/560**	B	573	667	2.5	41.5
	750	85	5	525	1,020	53,500	104,000	**69/560**	B	582	728	4	103
	820	115	6	705	1,410	72,000	143,000	**60/560**	B	588	792	5	200
570	790	115	6	705	1,400	72,000	143,000	**SC11401**	B	598	762	5	166
600	730	60	3	375	705	38,500	72,000	**68/600**	B	613	717	2.5	51.7
	800	90	5	590	1,200	60,500	122,000	**69/600**	B	622	778	4	122
	870	118	6	725	1,510	74,000	154,000	**60/600**	B	628	842	5	228
610	869	120	5	725	1,510	74,000	154,000	**SC12203**	E	632	847	4	223
630	710	69	4	210	395	21,400	40,000	**SC12601**	B	648	692	3	36
	780	69	4	420	820	43,000	84,000	**68/630**	B	648	762	3	71.6
	850	100	6	680	1,450	69,500	148,000	**69/630**	B	658	822	5	158
	920	128	7.5	840	1,770	85,500	181,000	**60/630**	B	666	884	6	280
650	919	118	6	840	1,780	85,500	181,000	**SC13007**	B	678	891	5	246
670	820	69	4	425	850	43,000	86,500	**68/670**	B	688	802	3	75.1
	900	103	6	700	1,530	71,000	156,000	**69/670**	B	698	872	5	181
	980	136	7.5	975	2,120	99,500	216,000	**60/670**	B	706	944	6	336
710	870	74	4	440	910	44,500	92,500	**68/710**	B	728	852	3	91.1
	950	106	6	715	1,600	72,500	163,000	**69/710**	B	738	922	5	205
	1,030	140	7.5	1,020	2,310	104,000	235,000	**60/710**	B	746	994	6	379

❶ Drawing details are shown in Page B-5.
❷ Smallest allowable dimension for chamfer dimension r.

Deep Groove Ball Bearings

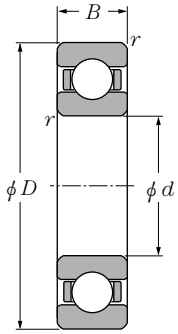

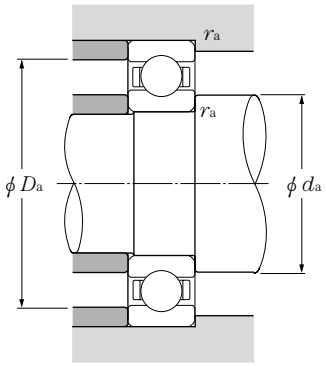

Equivalent bearing load

dynamic

$P_r = XF_r + YF_a$

$\frac{F_a}{C_{or}}$	e	$\frac{F_a}{F_r} \leqq e$		$\frac{F_a}{F_r} > e$	
		X	Y	X	Y
0.010	0.18	1	0	0.56	2.46
0.020	0.20				2.14
0.040	0.24				1.83
0.070	0.27				1.61
0.10	0.29				1.48
0.15	0.32				1.35
0.20	0.35				1.25
0.30	0.38				1.13
0.40	0.41				1.05
0.50	0.44				1.00

static

$P_{or} = 0.6F_r + 0.5F_a$

When $P_{or} < F_r$ use $P_{or} = F_r$

d 750～1,320mm

Boundary dimensions mm				Basic load ratings dynamic kN	static kN	dynamic kgf	static kgf	Bearing numbers	Drawing❶ No.	Abutment and fillet dimensions mm			Mass kg
d	D	B	$r_{s\,min}$❷	C_r	C_{or}	C_r	C_{or}			d_a min	D_a max	r_{as} max	(approx.)
750	920	78	5	485	1,040	49,500	106,000	68/750	B	772	898	4	107
	1,000	112	6	725	1,670	74,000	171,000	69/750	B	778	972	5	238
	1,070	140	7.5	925	2,210	94,500	225,000	SC15002	C	765	1,055	6	403
	1,090	150	7.5	1,050	2,500	107,000	255,000	60/750	B	765	1,075	6	457
800	980	82	5	485	1,070	49,500	110,000	68/800	B	822	958	4	127
	1,060	115	6	800	1,900	81,500	194,000	69/800	B	828	1,032	5	270
	1,150	155	7.5	1,090	2,690	111,000	274,000	60/800	B	836	1,114	6	515
820	1,160	160	7.5	1,020	2,540	104,000	259,000	SC16401	C	856	1,124	6	524
850	1,030	82	5	500	1,140	51,000	116,000	68/850	B	872	1,008	4	135
	1,120	118	6	900	2,240	92,000	228,000	69/850	B	878	1,092	5	305
	1,220	165	7.5	1,120	2,880	114,000	294,000	60/850	B	886	1,184	6	615
900	1,090	85	5	610	1,450	62,500	148,000	68/900	B	922	1,068	4	156
	1,180	122	6	920	2,340	93,500	238,000	69/900	B	928	1,152	5	346
	1,280	170	7.5	1,150	3,100	117,000	315,000	60/900	B	936	1,244	6	685
950	1,150	90	5	630	1,550	64,500	158,000	68/950	B	972	1,128	4	184
	1,250	132	7.5	935	2,430	95,000	248,000	69/950	B	986	1,214	6	424
	1,360	180	7.5	1,130	3,050	116,000	310,000	60/950	B	986	1,324	6	855
1,000	1,220	100	6	710	1,790	72,000	183,000	68/1000	B	1,028	1,192	5	237
	1,320	140	7.5	1,010	2,700	103,000	275,000	69/1000	B	1,036	1,284	6	506
	1,420	185	7.5	1,160	3,200	119,000	330,000	60/1000	B	1,036	1,384	6	945
1,060	1,280	100	6	730	1,910	74,500	195,000	68/1060	B	1,088	1,252	5	250
	1,400	150	7.5	1,200	3,400	122,000	345,000	69/1060	B	1,096	1,364	6	610
	1,500	195	9.5	1,190	3,350	121,000	345,000	60/1060	B	1,104	1,456	8	1,126
1,120	1,360	106	6	885	2,410	90,500	246,000	68/1120	B	1,148	1,332	5	307
	1,460	150	7.5	1,230	3,550	125,000	360,000	69/1120	B	1,156	1,424	6	640
	1,580	200	9.5	1,170	3,350	120,000	340,000	60/1120	B	1,164	1,536	8	1,258
1,180	1,420	106	6	920	2,580	94,000	264,000	68/1180	B	1,208	1,392	5	322
	1,540	160	7.5	1,250	3,700	127,000	375,000	69/1180	B	1,216	1,504	6	762
1,250	1,500	112	6	925	2,670	94,500	272,000	68/1250	B	1,278	1,472	5	376
1,320	1,600	122	6	1,100	3,300	112,000	335,000	68/1320	B	1,348	1,572	5	495

❶ Drawing details are shown in Page B-5.
❷ Smallest allowable dimension for chamfer dimension r.

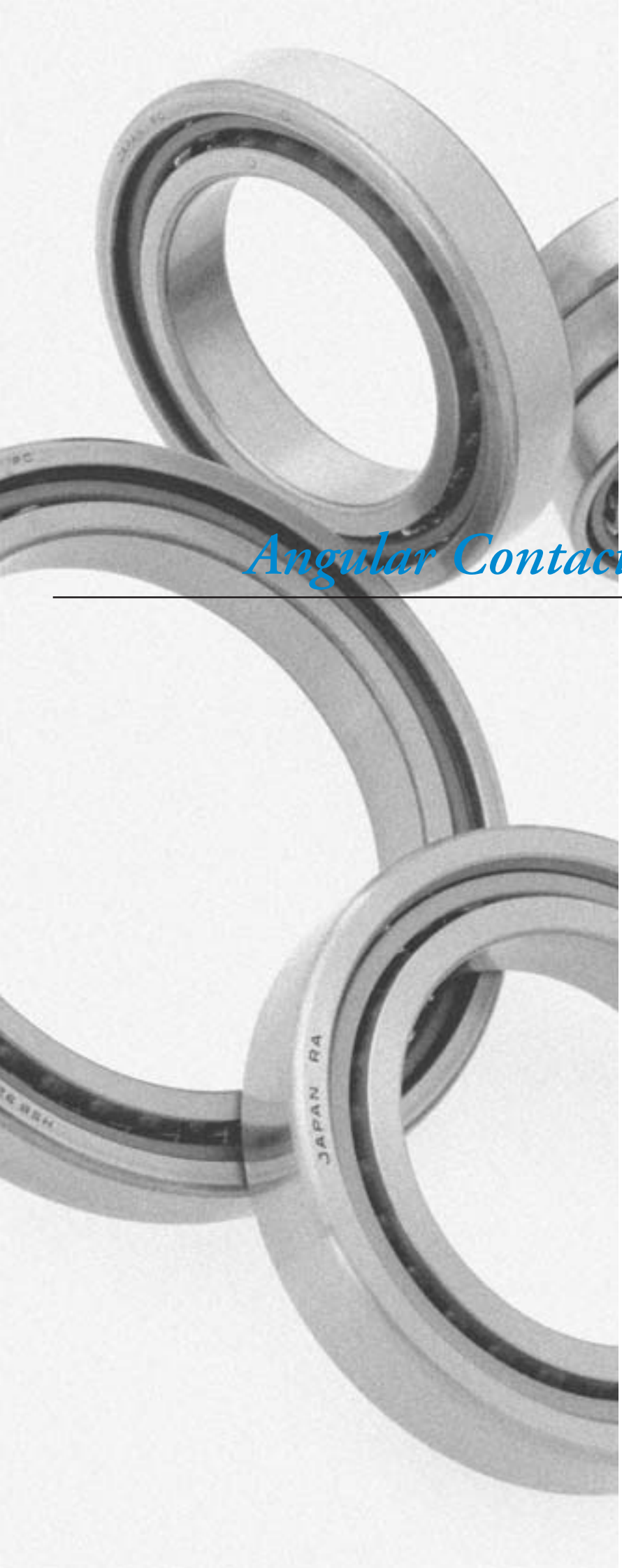

Angular Contact Ball Bearings

1. Structure and Characteristics

1. 1 Single row angular contact ball bearings / duplex angular contact ball bearings

A line connecting the contact points of both the ball and inner ring and ball and outer ring forms an angle to a line drawn radially: that angle is called the contact angle.

An angular contact ball bearing, while designed for radial loads, can accommodate single direction axial loads. Under radial loads and the resulting axial force component, the bearings are generally used in a duplex arrangement. More information on types and characteristics of duplexed angular contact ball bearings is shown in **Table 1**.

Cage types and special features of single and multi–row angular contact ball bearings are show in **Fig.1**. **Drawings A** through **F** feature the inner ring guide cage. **Drawings B** and **C** illustrate cages with lubrication ports. **Drawings D** and **E** feature a rolling element guide cage: **E** also shows the cage with a lubrication port. Note that the inner ring width in **drawing F** is larger than that of the outer ring.

Table 1 Duplex angular contact ball bearings

Arrangement type		Characteristics	
Back-to-back duplex arrangement (Code: DB)	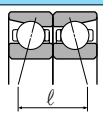	These bearings support the radial loads and both direction of axial loads.	● Since the distance "l" between the cone pressure apexes of bearing is large, the load capacity of the moment load is high. ● Permissible slant angle is small.
Face-to-face duplex arrangement (Code: DF)	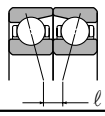		● The distance "l" between the cone pressure apexes of bearing is small in comparison with the back-to-back duplex arrangement, the load capacity of the moment load is low. ● Permissible slant angle is larger than the back-to-back duplex arrangement type.

Notes: 1. Since the bearings are manufactured in a set to adjust for the internal clearance or pre-loading, **parts with same serial number must be used for assembly**.
2. Combination of more than 3 bearings may occur. Please consult **NTN Engineering** for details.

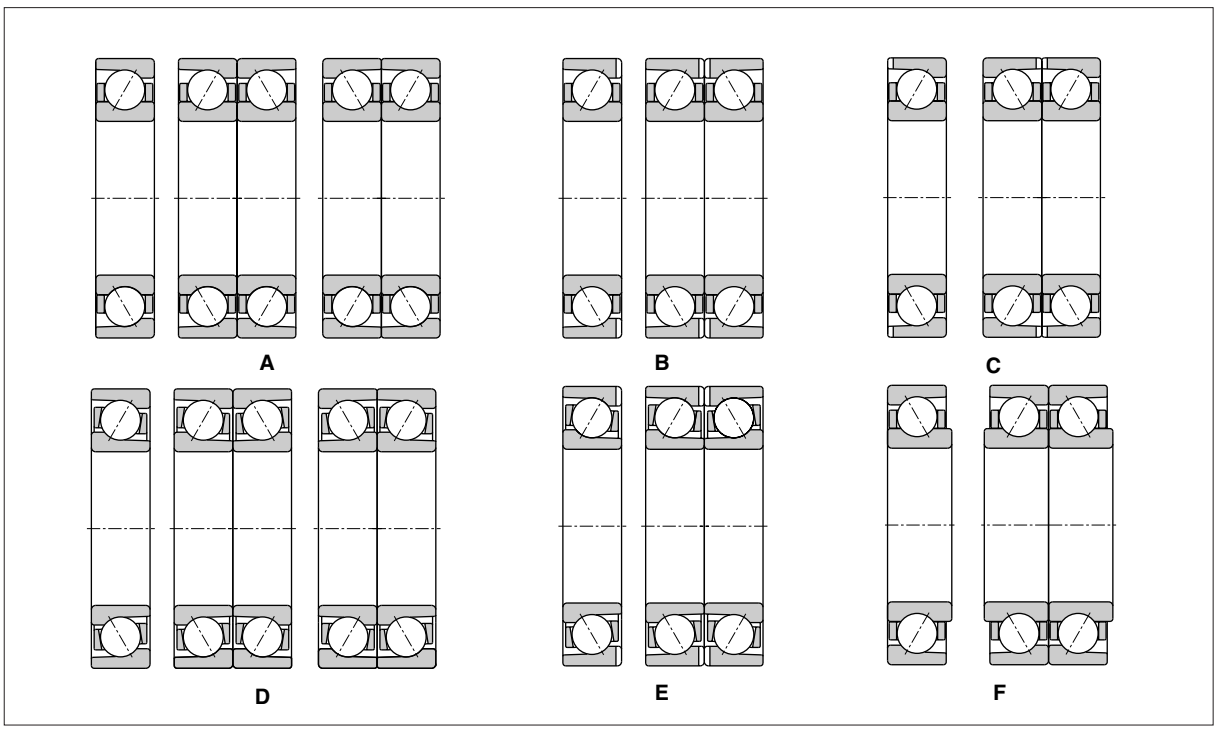

Fig.1 Single row/duplex angular contact ball bearings

1. 2 Double row angular contact ball bearings

Two single row angular contact ball bearings when duplexed back-to-back (DB) so that the inner ring forms one piece are used to create double row angular contact ball bearings. Alternatively, the bearings may be duplexed face-to-face (DF) with the outer ring as one piece.

These bearings support radial and axial loads in either direction: back-to-back duplexed bearings also support moment loads.

The cage type and special shape of the double row angular contact ball bearings are shown in **Fig.2** with the list of drawing numbers in the dimensions table.

The **drawings A** and **B** are the front-to-front duplex arrangement; drawing 2 is a bearing with a lubricating port; **drawings** from **C** to **G** show the back-to-back duplex arrangement and the different position of the lubricating ports whether or not there are lubricating grooves. **Drawing C** shows the inner ring width larger than that of outer ring.

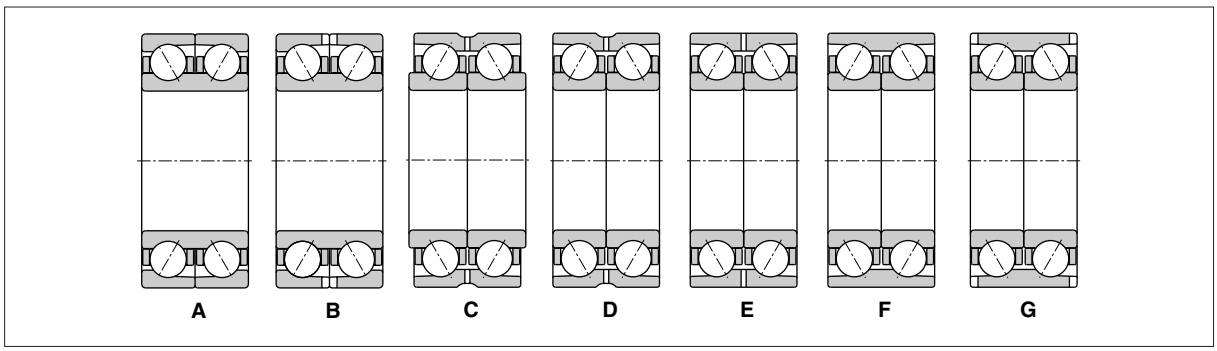

Fig.2 Double row angular contact ball bearings drawing

2. Dimensional Accuracy/Rotation Accuracy

Refer to Table 3.3 (Page A-12)
Single row/Duplex angular contact ball bearings
Double row angular contact ball bearings

3. Recommended Fitting

Refer to Table 4.2 (Page A-24)
Single row/Duplex angular contact ball bearings
Double row angular contact ball bearings

4. Bearing Internal Clearance

Refer to Table 5.3 (Page A-31)
Duplex angular contact ball bearings
Double row angular contact ball bearings

5. Cautions for Operation

When the bearing loads are small(about $F_r \leqq 0.02C_{or}$) or the ratio between the axial and radial loads of the duplex bearing exceeds the value "e", slippage may occur between the balls and the raceways. This slippage may cause smearing. Particularly with large size angular contact ball bearings, this tendency is significant since the ball and cage mass is large. Please consult with **NTN** Engineering for further details.

Angular Contact Ball Bearings (Single, Duplex)

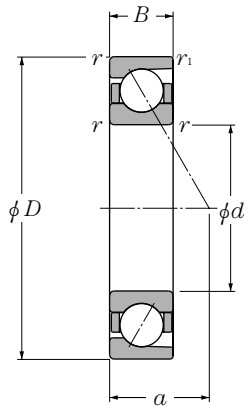

single

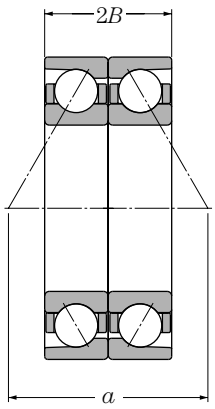

back-to-back arrangement (DB)

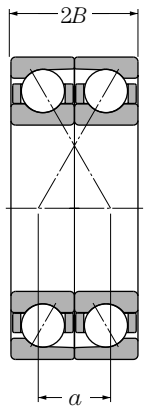

face-to-face arrangement (DF)

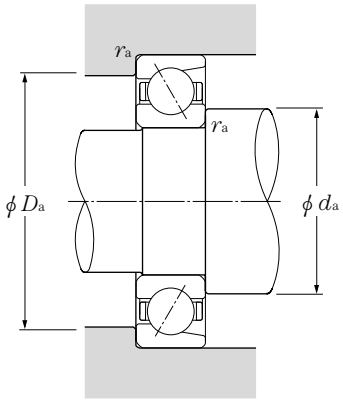

d 100～130mm

d	Boundary dimensions mm D	B	C	$r_{s\,min}$ ❷	$r_{ls\,min}$ ❷	contact angle α	Basic load ratings dynamic single kN C_r	static single kN C_{or}	dynamic single kgf C_r	static single kgf C_{or}	Bearing numbers single	Drawing No. ❶	Load center mm a	Mass single kg (approx.)
100	125	13	—	1	0.6	30	21.2	25.2	2,160	2,570	**7820**	A	39	0.36
	140	20	—	1.1	0.6	30	48.0	52.5	4,900	5,350	**7920**	A	44.5	0.93
	150	24	—	1.5	1	30	68.5	70.5	6,950	7,200	**7020**	A	48	1.47
	150	24	—	1.5	1	40	61.0	63.5	6,250	6,500	**7020B**	A	64.5	1.49
	180	34	—	2.1	1.1	30	144	126	14,700	12,800	**7220**	A	57.5	3.2
	180	34	—	2.1	1.1	40	130	114	13,300	11,700	**7220B**	A	76	3.26
	215	47	—	3	1.1	30	207	193	21,100	19,700	**7320**	A	69	7.18
	215	47	—	3	1.1	40	190	178	19,400	18,100	**7320B**	A	89.5	7.32
105	130	13	—	1	0.6	30	21.7	26.5	2,210	2,700	**7821**	A	40.5	0.37
	145	20	—	1.1	0.6	30	48.5	54.5	4,950	5,550	**7921**	A	46	0.97
	160	26	—	2	1	30	80.0	81.5	8,150	8,350	**7021**	A	51.5	1.86
	160	26	—	2	1	40	71.5	73.5	7,300	7,500	**7021B**	A	68.6	1.88
	190	36	—	2.1	1.1	30	157	142	16,000	14,400	**7221**	A	60.5	3.79
	190	36	—	2.1	1.1	40	142	129	14,500	13,100	**7221B**	A	80	3.87
	225	49	—	3	1.1	30	220	210	22,400	21,500	**7321**	A	72	8.2
	225	49	—	3	1.1	40	202	194	20,600	19,700	**7321B**	A	93.5	8.36
110	140	16	—	1	0.6	30	31.0	38.0	3,200	3,850	**7822**	A	44	0.58
	150	20	—	1.1	0.6	30	49.5	56.0	5,050	5,700	**7922**	A	47.5	1.01
	170	28	—	2	1	30	92.0	93.0	9,350	9,450	**7022**	A	54.5	2.3
	170	28	—	2	1	40	82.5	83.5	8,400	8,550	**7022B**	A	72.8	2.34
	200	38	—	2.1	1.1	30	170	158	17,300	16,100	**7222**	A	64	4.45
	200	38	—	2.1	1.1	40	154	144	15,700	14,700	**7222B**	A	84	4.54
	240	50	—	3	1.1	30	246	246	25,100	25,100	**7322**	A	76	9.6
	240	50	—	3	1.1	40	226	226	23,000	23,100	**7322B**	A	99	9.8
120	150	16	—	1	0.6	30	31.5	40.0	3,250	4,050	**7824**	A	47	0.63
	165	22	—	1.1	0.6	30	61.0	69.5	6,200	7,100	**7924**	A	52	1.66
	180	28	—	2	1	30	93.5	98.5	9,550	10,000	**7024**	A	57.5	2.47
	180	28	—	2	1	40	84.0	89.0	8,550	9,050	**7024B**	A	77	2.51
	215	40	—	2.1	1.1	40	165	162	16,900	16,500	**7224B**	A	90.5	6.26
	215	40	—	2.1	1.1	30	183	177	18,600	18,100	**7224**	A	68.5	6.26
	260	55	—	3	1.1	30	246	252	25,100	25,700	**7324**	A	82.5	14.7
	260	55	—	3	1.1	40	225	231	23,000	23,600	**7324B**	A	107	14.7
130	165	18	—	1.1	0.6	30	42.0	53.0	4,300	5,400	**7826**	A	51.5	0.91
	180	24	—	1.5	1	30	75.0	87.5	7,650	8,900	**7926**	A	56.5	1.82
	199.5	33	—	2.5	1	30	117	125	12,000	12,900	**SF2652**	A	64	3.74

❶ Drawing details are shown in Page B-15.
❷ Smallest allowable dimension for chamfer dimension r or r_1.

Angular Contact Ball Bearings (Single, Duplex)

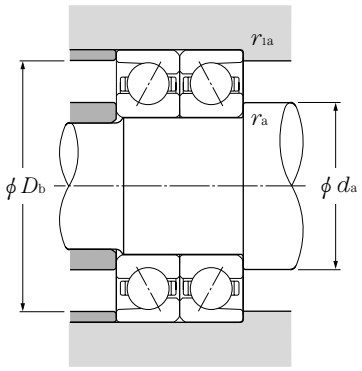

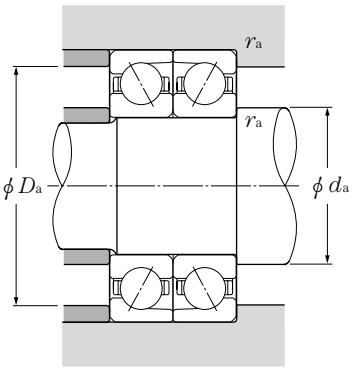

Equivalent bearing load

dynamic

$P_r = XF_r + YF_a$

Contact angle	e	Single				DB, DF			
		$F_a/F_r \leqq e$		$F_a/F_r > e$		$F_a/F_r \leqq e$		$F_a/F_r > e$	
		X	Y	X	Y	X	Y	X	Y
30°	0.80	1	0	0.39	0.76	1	0.78	0.63	1.24
40°	1.14	1	0	0.35	0.57	1	0.55	0.57	0.93

static

$P_{or} = X_o F_r + Y_o F_a$

Contact angle	Single		DB, DF	
	X_o	Y_o	X_o	Y_o
30°	0.5	0.33	1	0.66
40°	0.5	0.26	1	0.52

For single, When $P_{or} < F_r$ use $P_{or} = F_r$

Basic load ratings dynamic (duplex) KN C_r	Basic load ratings static (duplex) KN C_{or}	Basic load ratings dynamic (duplex) kgf C_r	Basic load ratings static (duplex) kgf C_{or}	Bearing numbers (duplex) DB	Bearing numbers (duplex) DF	Load center mm a DB	Load center mm a DF	Abutment and fillet dimensions mm d_a min	D_a max	r_{as} max	r_{las} max
34.0	50.5	3,500	5,150	DB	DF	78	52	105.5	119.5	1	0.6
78.0	105	7,950	10,700	DB	DF	109	69	107	133	1	0.6
111	141	11,300	14,400	DB	DF	120	72	108.5	141.5	1.5	1
76.5	127	10,100	13,000	DB	DF	129	81	108.5	141.5	1.5	1
233	251	23,800	25,600	DB	DF	149	81	112	168	2	1
212	229	21,600	23,300	DB	DF	186	118	112	168	2	1
335	385	34,500	39,500	DB	DF	185	91	114	201	2.5	1
310	355	31,500	36,000	DB	DF	226	132	114	201	2.5	1
35.0	53.0	3,600	5,400	DB	DF	81	55	110.5	124.5	1	0.6
79.0	109	8,050	11,100	DB	DF	112	72	112	138	1	0.6
130	163	13,300	16,700	DB	DF	129	77	115	150	2	1
116	147	11,900	15,000	DB	DF	137	85	115	150	2	1
254	283	25,900	28,900	DB	DF	157	85	117	178	2	1
231	258	23,500	26,300	DB	DF	196	124	117	178	2	1
355	420	36,500	43,000	DB	DF	193	95	119	211	2.5	1
330	385	33,500	39,500	DB	DF	236	138	119	211	2.5	1
50.5	76.0	5,150	7,750	DB	DF	88	56	115.5	134.5	1	0.6
80.0	112	8,150	11,400	DB	DF	115	75	117	143	1	0.6
149	186	15,200	18,900	DB	DF	137	81	120	160	2	1
134	167	13,600	17,100	DB	DF	145.5	89.5	120	160	2	1
276	315	28,100	32,500	DB	DF	166	90	122	188	2	1
250	289	25,500	29,400	DB	DF	206	130	122	188	2	1
400	490	41,000	50,000	DB	DF	202	102	124	226	2.5	1
365	455	37,500	46,000	DB	DF	248	148	124	226	2.5	1
51.5	79.5	5,250	8,100	DB	DF	94	62	125.5	144.5	1	0.6
99.0	139	10,100	14,200	DB	DF	126	82	127	158	1	0.6
152	197	15,500	20,100	DB	DF	143	87	130	170	2	1
136	178	13,900	18,100	DB	DF	154	98	130	170	2	1
269	325	27,400	33,000	DB	DF	221	141	132	203	2	1
297	355	30,500	36,000	DB	DF	177	97	132	203	2	1
400	505	41,000	51,500	DB	DF	220	110	134	246	2.5	1
365	460	37,500	47,000	DB	DF	269	159	134	246	2.5	1
68.5	106	6,950	10,800	DB	DF	103	67	137	158	1	0.6
121	175	12,400	17,800	DB	DF	137	89	138.5	171.5	1.5	1
191	251	19,400	25,600	DB	DF	128.5	62.5	142	187.5	2	1

Angular Contact Ball Bearings (Single, Duplex)

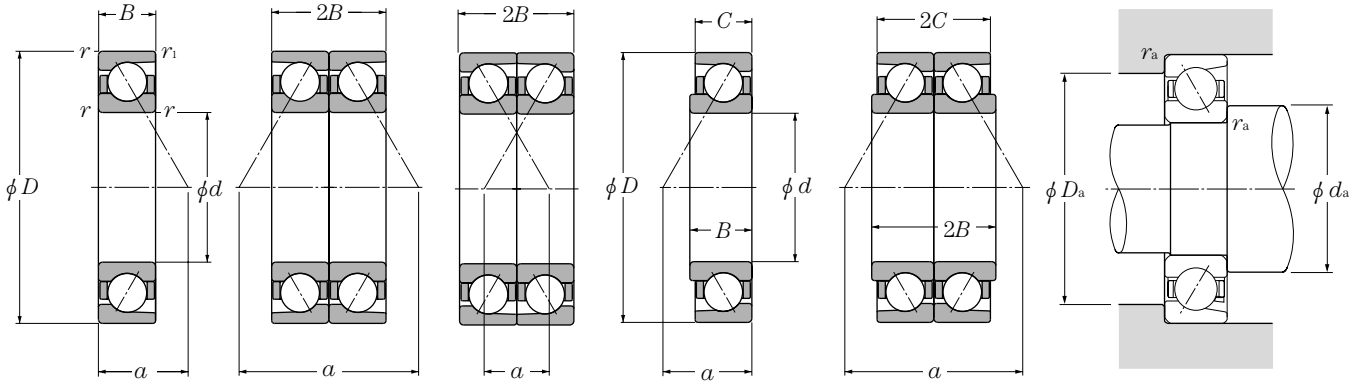

single | back-to-back arrangement (DB) | face-to-face arrangement (DF) | single | back-to-back arrangement (DB)

d 130～160mm

Boundary dimensions mm						contact angle	Basic load ratings dynamic kN	Basic load ratings static kN	dynamic kgf	static kgf	Bearing numbers	Drawing ❶ No.	Load center	Mass
							single				single			single
d	D	B	C	$r_{s\,min}$ ❷	$r_{ls\,min}$ ❷	α	C_r	C_{or}	C_r	C_{or}			mm a	kg (approx.)
130	200	33	—	2	1	30	117	125	12,000	12,800	7026	A	64	3.73
	200	33	—	2	1	40	105	113	10,700	11,500	7026B	A	86	3.78
	205	24	—	2.5	1	30	75.0	90.0	7,650	9,150	SF2608	A	60.5	2.98
	230	40	—	3	1.1	30	196	198	20,000	20,200	7226	A	72	7.15
	230	40	—	3	1.1	40	177	180	18,100	18,300	7226B	A	95.5	7.15
	280	58	—	4	1.5	30	273	293	27,900	29,800	7326	A	88	17.6
	280	58	—	4	1.5	40	250	268	25,500	27,400	7326B	A	115	17.6
140	175	18	—	1.1	0.6	30	43.0	55.5	4,350	5,650	7828	A	54.5	0.97
	190	24	—	1.5	1	30	75.5	90.0	7,700	9,150	7928	A	59.5	1.94
	210	33	—	2	1	30	120	133	12,200	13,500	7028	A	67	3.96
	210	33	—	2	1	40	107	119	10,900	12,100	7028B	A	90	4.01
	250	42	—	3	1.1	30	203	215	20,700	21,900	7228	A	77.5	8.78
	250	42	—	3	1.1	40	183	195	18,700	19,900	7228B	A	103	8.78
	300	62	—	4	1.5	30	300	335	30,500	34,500	7328	A	94.5	21.5
	300	62	—	4	1.5	40	275	310	28,100	31,500	7328B	A	123	21.5
145	220	38	—	2.5	1.5	30	148	158	15,100	16,100	SF2951	A	71.7	5.15
150	190	20	—	1.1	0.6	30	54.5	70.5	5,550	7,200	7830	A	59	1.35
	210	28	—	2	1	30	97.5	117	9,900	11,900	7930	A	66	2.96
	225	35	—	2.1	1.1	30	137	154	14,000	15,700	7030	A	71.5	4.82
	225	35	—	2.1	1.1	40	122	138	12,500	14,000	7030B	A	96	4.88
	270	45	—	3	1.1	30	232	259	23,700	26,400	7230	A	83	11
	270	45	—	3	1.1	40	210	235	21,400	24,000	7230B	A	111	11
	320	65	—	4	1.5	30	330	380	33,500	39,000	7330	A	100	25.1
	320	65	—	4	1.5	40	300	350	30,500	36,000	7330B	A	131	25.1
160	200	20	—	1.1	0.6	30	55.5	74.0	5,650	7,550	7832	A	62	1.42
	215	28	25	2.5	1.1	40	75.5	93.0	7,700	9,450	SF3208	F	91	2.74
	220	28	—	2	1	30	98.5	121	10,000	12,300	7932	A	69	3.13
	229.5	33	—	2.5	1	40	111	128	11,300	13,100	SF3209	A	98.5	4.52
	229.5	33	—	2.5	1	40	111	128	11,300	13,100	SF3214	C	98.5	4.52
	230	33	—	2.5	1	30	124	147	12,600	15,000	SF3210	A	73	4.15
	240	38	—	2.1	1.1	30	155	176	15,800	18,000	7032	A	77	5.96
	240	38	—	2.1	1.1	40	139	158	14,100	16,100	7032B	A	103	5.98
	290	48	—	3	1.1	30	263	305	26,800	31,500	7232	A	89	13.7
	290	48	—	3	1.1	40	238	279	24,200	28,400	7232B	A	118	13.7
	340	68	—	4	1.5	30	345	420	35,500	43,000	7332	A	106	29.8

❶ Drawing details are shown in Page B-15.
❷ Smallest allowable dimension for chamfer dimension r or r_1.

Angular Contact Ball Bearings (Single, Duplex)

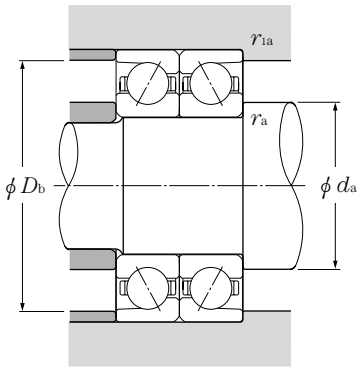

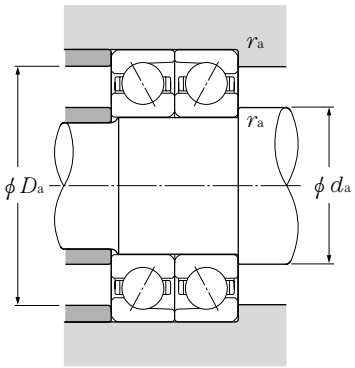

Equivalent bearing load

dynamic

$P_r = XF_r + YF_a$

Contact angle	e	Single				DB, DF			
		$F_a/F_r \leqq e$		$F_a/F_r > e$		$F_a/F_r \leqq e$		$F_a/F_r > e$	
		X	Y	X	Y	X	Y	X	Y
30°	0.80	1	0	0.39	0.76	1	0.78	0.63	1.24
40°	1.14	1	0	0.35	0.57	1	0.55	0.57	0.93

static

$P_{or} = X_o F_r + Y_o F_a$

Contact angle	Single		DB, DF	
	X_o	Y_o	X_o	Y_o
30°	0.5	0.33	1	0.66
40°	0.5	0.26	1	0.52

For single, When $P_{or} < F_r$ use $P_{or} = F_r$

Basic load ratings dynamic (duplex) KN C_r	Basic load ratings static (duplex) KN C_{or}	Basic load ratings dynamic (duplex) kgf C_r	Basic load ratings static (duplex) kgf C_{or}	Bearing numbers (duplex) DB	Bearing numbers (duplex) DF	Load center mm a DB	Load center mm a DF	Abutment and fillet dimensions mm d_a min	D_a max	r_{as} max	r_{las} max
191	251	19,400	25,600	DB	DF	161	95	140	190	2	1
171	226	17,400	23,100	DB	DF	171.5	105.5	140	190	2	1
122	180	12,500	18,300	DB	DF	120.5	72.5	142	193	2	1
320	395	32,500	40,500	DB	DF	184	104	144	216	2.5	1
288	360	29,400	36,500	DB	DF	231	151	144	216	2.5	1
445	585	45,500	59,500	DB	DF	234	118	148	262	3	1.5
405	535	41,500	54,500	DB	DF	288	172	148	262	3	1.5
69.5	111	7,100	11,300	DB	DF	109	73	147	168	1	0.6
123	180	12,500	18,300	DB	DF	143	95	148.5	181.5	1.5	1
194	265	19,800	27,000	DB	DF	167	101	150	200	2	1
174	237	17,700	24,200	DB	DF	180	114	150	200	2	1
330	430	33,500	44,000	DB	DF	197	113	154	236	2.5	1
297	390	30,500	40,000	DB	DF	248	164	154	236	2.5	1
490	670	50,000	68,500	DB	DF	251	127	158	282	3	1.5
445	615	45,500	63,000	DB	DF	308	184	158	282	3	1.5
241	315	24,500	32,000	DB	DF	143.5	67.5	157	208	2	1.5
88.5	141	9,000	14,400	DB	DF	118	78	157	183	1	0.6
158	234	16,100	23,900	DB	DF	160	104	160	200	2	1
222	305	22,700	31,500	DB	DF	178	108	162	213	2	1
199	275	20,300	28,100	DB	DF	192.5	122.5	162	213	2	1
375	515	38,500	53,000	DB	DF	211	121	164	256	2.5	1
340	470	34,500	48,000	DB	DF	267	177	164	256	2.5	1
535	765	54,500	78,000	DB	DF	265	135	168	302	3	1.5
490	700	50,000	71,500	DB	DF	327	197	168	302	3	1.5
90.5	148	9,200	15,100	DB	DF	124	84	167	193	1	0.6
123	186	12,500	18,900	DB	—	182.5	132.5	172	203	2	1
160	241	16,300	24,600	DB	DF	166	110	170	210	2	1
180	256	18,300	26,100	DB	DF	196.5	130.5	172	217.5	2	1
180	256	18,300	26,100	—	DF	196.5	130.5	172	217.5	2	1
201	293	20,500	29,900	DB	DF	145.5	79.5	172	218	2	1
252	355	25,700	36,000	DB	DF	192	116	172	228	2	1
225	315	23,000	32,500	DB	DF	206	130	172	228	2	1
425	615	43,500	62,500	DB	DF	226	130	174	276	2.5	1
385	555	39,500	57,000	DB	DF	284	188	174	276	2.5	1
565	845	57,500	86,000	DB	DF	280	144	178	322	3	1.5

Angular Contact Ball Bearings (Single, Duplex)

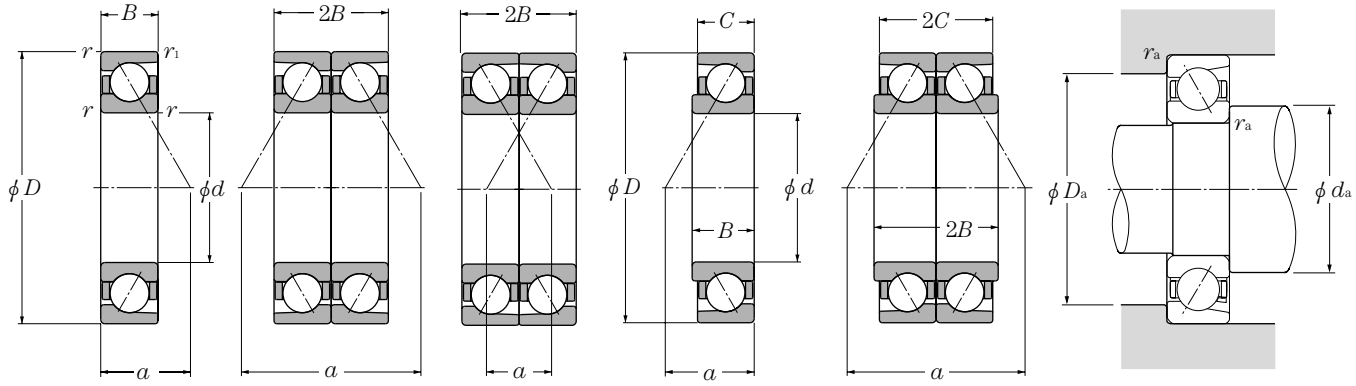

single | back-to-back arrangement (DB) | face-to-face arrangement (DF) | single | back-to-back arrangement (DB)

d 160～195mm

d	Boundary dimensions mm D	B	C	$r_{s\,min}$ ❷	$r_{ls\,min}$ ❷	contact angle α	Basic load ratings dynamic single kN C_r	static single kN C_{or}	dynamic single kgf C_r	static single kgf C_{or}	Bearing numbers single	Drawing No. ❶	Load center mm a	Mass single kg (approx.)
160	340	68	—	4	1.5	40	315	385	32,000	39,500	7332B	A	139	29.8
170	215	22	—	1.1	0.6	30	68.5	90.5	6,950	9,250	7834	A	66.5	1.88
	230	28	—	2	1	30	102	129	10,400	13,100	7934	A	71.5	3.29
	260	42	—	2.1	1.1	30	186	214	18,900	21,900	7034	A	83	7.96
	260	42	—	2.1	1.1	40	166	193	17,000	19,700	7034B	A	111.5	8.02
	310	52	—	4	1.5	30	295	360	30,000	36,500	7234	A	95.5	17
	310	52	—	4	1.5	40	266	325	27,200	33,000	7234B	A	127	17
	360	72	—	4	1.5	30	390	485	39,500	49,500	7334	A	113	35.3
	360	72	—	4	1.5	40	355	445	36,000	45,500	7334B	A	147	35.3
180	225	22	—	1.1	0.6	30	70.0	95.0	7,100	9,700	7836	A	69.5	1.98
	250	33	—	2	1	30	131	163	13,400	16,600	7936	A	78.5	4.87
	259.5	33	—	2.5	1	40	138	166	14,100	16,900	SF3618	B	109	5.7
	259.5	33	—	2.5	1	30	178	211	18,200	21,500	SF3629	C	80	5.8
	259.5	33	—	2.5	1	30	178	211	18,200	21,500	SF3639	B	80	5.75
	259.5	33	—	2.5	1	30	155	190	15,800	19,400	SF3641	C	80	5.65
	280	46	—	2.1	1.1	30	219	266	22,300	27,100	7036	A	89.5	10.4
	280	46	—	2.1	1.1	40	196	240	20,000	24,400	7036B	A	119.5	10.5
	320	52	—	4	1.5	30	305	385	31,000	39,000	7236	A	98	17.7
	320	52	—	4	1.5	40	276	350	28,100	35,500	7236B	A	131	17.7
	380	75	—	4	1.5	30	410	535	41,500	54,500	7336	A	118	40.9
	380	75	—	4	1.5	40	375	490	38,000	50,000	7336B	A	155	40.9
190	240	24	—	1.5	1	30	85.0	116	8,650	11,800	7838	A	74	2.55
	255	33	29	2.5	1.5	40	108	138	11,000	14,100	SF3806	F	108	4.16
	259.5	33	—	2	1	30	133	169	13,500	17,200	SF3816	C	81.5	5.1
	260	33	—	2	1	30	133	169	13,500	17,200	7938	A	81.5	5.1
	269.5	33	—	2.5	1.5	30	132	168	13,500	17,100	SF3802	A	83	5.95
	269.5	33	—	2.5	2.5	40	134	166	13,600	16,900	SF3807	B	113	6.05
	290	46	—	2.1	1.1	30	224	280	22,800	28,600	7038	A	92.5	10.8
	290	46	—	2.1	1.1	40	201	253	20,400	25,800	7038B	A	124	10.9
	340	55	—	4	1.5	30	305	390	31,000	39,500	7238	A	104	21.3
	340	55	—	4	1.5	40	273	355	27,800	36,000	7238B	A	139	21.3
	400	78	—	5	2	30	430	585	44,000	59,500	7338	A	124	47
	400	78	—	5	2	40	390	535	40,000	54,500	7338B	A	163	47
195	270	35	—	2.5	1.5	30	153	196	15,600	20,000	SF3901	C	84.5	6.2

❶ Drawing details are shown in Page B-15.
❷ Smallest allowable dimension for chamfer dimension r or r_1.

Angular Contact Ball Bearings (Single, Duplex)

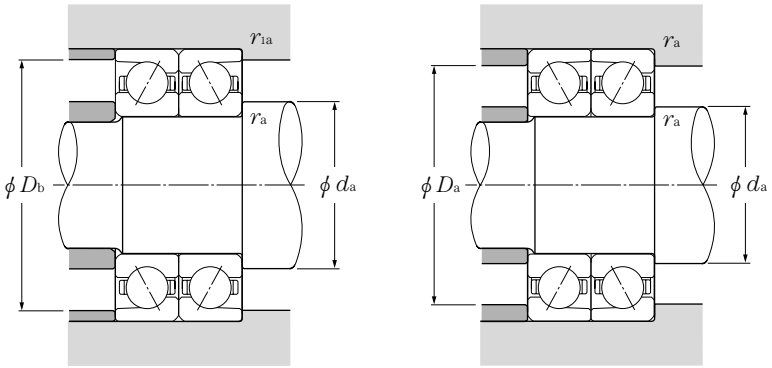

Equivalent bearing load

dynamic

$P_r = XF_r + YF_a$

Contact angle	e	Single				DB, DF			
		$F_a/F_r \leqq e$		$F_a/F_r > e$		$F_a/F_r \leqq e$		$F_a/F_r > e$	
		X	Y	X	Y	X	Y	X	Y
30°	0.80	1	0	0.39	0.76	1	0.78	0.63	1.24
40°	1.14	1	0	0.35	0.57	1	0.55	0.57	0.93

static

$P_{or} = X_o F_r + Y_o F_a$

Contact angle	Single		DB, DF	
	X_o	Y_o	X_o	Y_o
30°	0.5	0.33	1	0.66
40°	0.5	0.26	1	0.52

For single, When $P_{or} < F_r$ use $P_{or} = F_r$

Basic load ratings dynamic (duplex) KN C_r	Basic load ratings static (duplex) KN C_{or}	Basic load ratings dynamic kgf C_r	Basic load ratings static kgf C_{or}	Bearing numbers (duplex) DB	Bearing numbers (duplex) DF	Load center mm a DB	Load center mm a DF	Abutment and fillet dimensions mm d_a min	D_a max	r_{as} max	r_{las} max
515	770	52,500	79,000	DB	DF	346	210	178	322	3	1.5
111	181	11,300	18,500	DB	DF	133	89	177	208	1	0.6
165	257	16,900	26,200	DB	DF	171	115	180	220	2	1
300	430	31,000	43,500	DB	DF	208	124	182	248	2	1
270	385	27,600	39,500	DB	DF	222.5	138.5	182	248	2	1
480	715	49,000	73,000	DB	DF	243	139	188	292	3	1.5
435	650	44,000	66,500	DB	DF	306	202	188	292	3	1.5
630	970	64,500	99,000	DB	DF	298	154	188	342	3	1.5
575	890	59,000	90,500	DB	DF	366	222	188	342	3	1.5
113	190	11,600	19,400	DB	DF	139	95	187	218	1	0.6
213	325	21,700	33,500	DB	DF	190	124	190	240	2	1
224	330	22,800	34,000	DB	—	217.5	151.5	192	247.5	2	1
290	420	29,600	43,000	—	DF	160	94	192	247.5	2	1
290	420	29,600	43,000	DB	DF	160	80	192	247.5	2	1
251	380	25,600	38,500	—	DF	160	94	192	247.5	2	1
355	530	36,500	54,000	DB	DF	225	133	192	268	2	1
320	480	32,500	49,000	DB	DF	239	147	192	268	2	1
495	770	50,500	78,500	DB	DF	248	144	198	302	3	1.5
450	700	45,500	71,000	DB	DF	314	210	198	302	3	1.5
665	1,070	68,000	109,000	DB	DF	311	161	198	362	3	1.5
605	975	62,000	99,500	DB	DF	385	235	198	362	3	1.5
138	232	14,100	23,700	DB	DF	148	100	198.5	231.5	1.5	1
175	276	17,800	28,200	DB	—	215.5	157.5	202	243	2	1.5
216	335	22,000	34,500	—	DF	163	97	200	249.5	2	1
216	335	22,000	34,500	DB	DF	196	130	200	250	2	1
215	335	21,900	34,500	DB	DF	166	83	202	257.5	2	1.5
217	330	22,100	34,000	DB	—	226	160	202	257.5	2	2
365	560	37,000	57,000	DB	DF	231	139	202	278	2	1
325	505	33,000	51,500	DB	DF	247.5	155.5	202	278	2	1
495	780	50,000	79,500	DB	DF	263	153	208	322	3	1.5
445	705	45,000	72,000	DB	DF	333	223	208	322	3	1.5
695	1,170	71,000	119,000	DB	DF	326	170	212	378	4	2
635	1,070	64,500	109,000	DB	DF	404	248	212	378	4	2
249	390	25,400	40,000	—	DF	169	99	207	258	2	1.5

Angular Contact Ball Bearings (Single, Duplex)

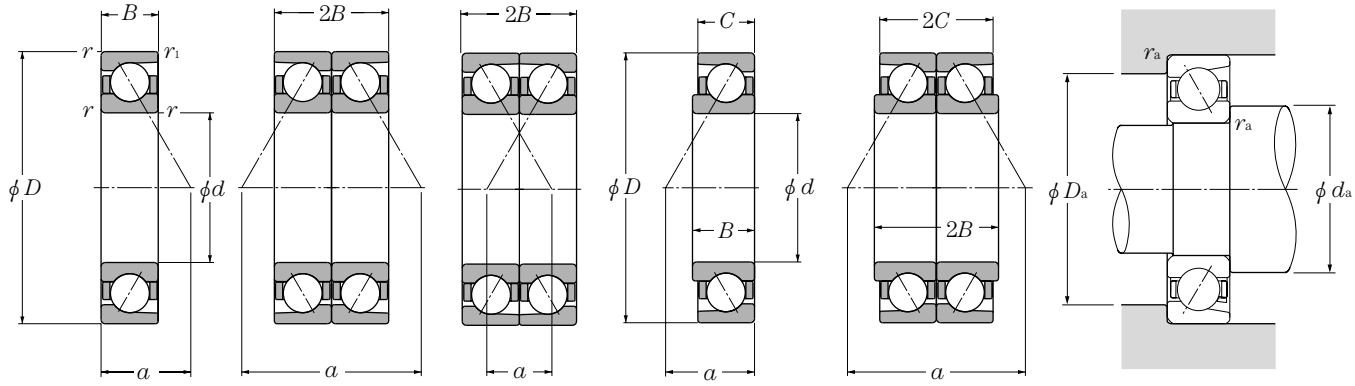

single | back-to-back arrangement (DB) | face-to-face arrangement (DF) | single | back-to-back arrangement (DB)

d 200～250mm

Boundary dimensions mm						contact angle	Basic load ratings dynamic kN		static kN		Bearing numbers	Drawing No.❶	Load center	Mass
							dynamic	static	dynamic	static				
							single		kgf		single			single
d	D	B	C	$r_{s\,min}$❷	$r_{ls\,min}$❷	α	C_r	C_{or}	C_r	C_{or}			mm a	kg (approx.)
200	250	24	—	1.5	1	30	87.0	122	8,850	12,400	7840	A	77	2.68
	279.5	38	—	2.5	1.5	40	165	202	16,800	20,600	SF4006	A	119.5	7.15
	280	38	—	2.1	1.1	30	185	231	18,900	23,600	7940	A	88.5	7.15
	289.5	38	—	2.5	1.5	40	188	238	19,200	24,200	SF4017	C	122	8.25
	310	51	—	2.1	1.1	30	252	325	25,700	33,000	7040	A	99	14
	310	51	—	2.1	1.1	40	226	293	23,000	29,900	7040B	A	132.5	14.1
	360	58	—	4	1.5	30	335	450	34,500	46,000	7240	A	110	25.3
	360	58	—	4	1.5	40	305	410	31,000	41,500	7240B	A	146	25.3
	420	80	—	5	2	30	450	605	46,000	62,000	7340	A	130	53.1
	420	80	—	5	2	40	410	555	42,000	56,500	7340B	A	170	53.1
203.2	330.2	88.9	—	3	1.5	30	219	285	22,400	29,100	SF4104	A	99	14.7
220	270	24	—	1.5	1	30	89.0	131	9,100	13,300	7844	A	82.5	2.91
	300	38	—	2.1	1.1	30	187	239	19,000	24,300	7944	A	94	7.74
	300	38	35	2.5	1.5	40	149	189	15,200	19,300	SF4407	F	126.5	7.25
	309.5	38	—	2.1	1.1	40	190	246	19,400	25,100	SF4421	B	130	8.9
	309.5	38	—	2.1	1.1	40	190	246	19,400	25,100	SF4433	C	130	8.9
	319.5	46	—	2.1	1.1	35	226	299	23,000	30,500	SF4438	C	117.5	12.2
	340	56	—	3	1.1	30	286	390	29,100	39,500	7044	A	109	18.2
	340	56	—	3	1.1	40	238	325	24,300	33,000	7044B	A	145.5	18.4
	400	65	—	4	1.5	30	345	485	35,000	49,500	7244	A	122	37.1
	460	88	—	5	2	30	495	725	50,500	74,000	7344	A	142	72.4
230	329.5	40	—	2.5	1.5	40	154	202	15,700	20,600	SF4614	E	135.5	11
240	300	28	—	2	1	30	101	155	10,300	15,800	7848	A	92	4.49
	320	38	—	2.1	1.1	30	193	255	19,600	26,000	7948	A	100	8.34
	329.5	40	—	2.1	1.1	30	221	305	22,600	31,000	SF4839	C	102.5	10
	329.5	40	—	2.5	1.5	40	197	265	20,100	27,000	SF4814	A	139.5	10.1
	329.5	40	—	2.5	1.5	40	197	265	20,100	27,000	SF4818	B	139.5	10.1
	340	40	—	2.5	1.5	30	211	289	21,500	29,400	SF4802	A	160.5	11.5
	360	56	—	3	1.1	30	279	400	28,500	40,500	7048	A	114.5	19.5
	360	56	—	3	1.1	40	249	355	25,400	36,000	7048B	A	154	19.8
	440	72	—	4	1.5	30	420	630	42,500	64,500	7248	A	135.5	49.8
	500	95	—	5	2	30	515	795	52,500	81,000	7348	A	154.5	92.2
250	340	38	—	2.5	1	40	169	222	17,200	22,600	SF5005	F	141.5	9.55
	349.5	46	—	3	1.5	30	233	325	23,700	33,000	SF5004	A	109.5	13.6

❶ Drawing details are shown in Page B-15.
❷ Smallest allowable dimension for chamfer dimension r or r_1.

Angular Contact Ball Bearings (Single, Duplex)

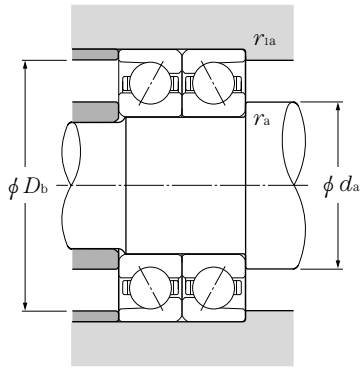

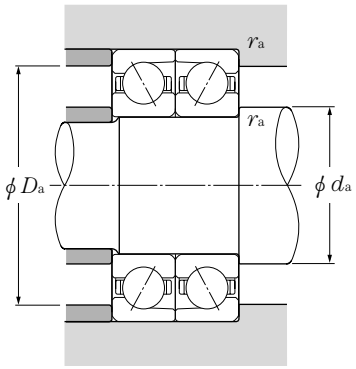

Equivalent bearing load

dynamic

$P_r = XF_r + YF_a$

Contact angle	e	Single				DB, DF			
		$F_a/F_r \leqq e$		$F_a/F_r > e$		$F_a/F_r \leqq e$		$F_a/F_r > e$	
		X	Y	X	Y	X	Y	X	Y
30°	0.80	1	0	0.39	0.76	1	0.78	0.63	1.24
40°	1.14	1	0	0.35	0.57	1	0.55	0.57	0.93

static

$P_{or} = X_o F_r + Y_o F_a$

Contact angle	Single		DB, DF	
	X_o	Y_o	X_o	Y_o
30°	0.5	0.33	1	0.66
40°	0.5	0.26	1	0.52

For single, When $P_{or} < F_r$ use $P_{or} = F_r$

Basic load ratings dynamic (duplex) KN C_r	Basic load ratings static (duplex) KN C_{or}	Basic load ratings dynamic (duplex) kgf C_r	Basic load ratings static (duplex) kgf C_{or}	Bearing numbers (duplex) DB	Bearing numbers (duplex) DF	Load center mm a DB	Load center mm a DF	Abutment and fillet dimensions mm d_a min	D_a max	r_{as} max	r_{las} max
141	244	14,400	24,900	DB	DF	154	106	208.5	241.5	1.5	1
268	405	27,400	41,000	DB	DF	239	163	212	267.5	2	1.5
300	465	30,500	47,000	DB	DF	215	139	212	268	2	1
305	475	31,000	48,500	—	DF	243.5	167.5	212	277.5	2	1.5
410	650	41,500	66,000	DB	DF	249	147	212	298	2	1
365	585	37,500	60,000	DB	DF	265	163	212	298	2	1
550	900	56,000	92,000	DB	DF	278	162	218	342	3	1.5
495	815	50,500	83,000	DB	DF	350	234	218	342	3	1.5
730	1,210	74,500	124,000	DB	DF	340	180	222	398	4	2
665	1,110	68,000	113,000	DB	DF	420	260	222	398	4	2
355	570	36,500	58,000	DB	DF	198.5	109.5	217.2	316.2	2.5	1.5
145	261	14,800	26,600	DB	DF	165.5	117.5	228.5	261.5	1.5	1
305	475	31,000	48,500	DB	DF	226	150	232	288	2	1
243	380	24,700	38,500	DB	—	253	183	232	288	2	1.5
310	490	31,500	50,000	DB	—	260.5	184.5	232	297.5	2	1
310	490	31,500	50,000	—	DF	260.5	184.5	232	297.5	2	1
365	600	37,500	61,000	—	DF	235	143	232	307.5	2	1
465	780	47,500	79,500	DB	DF	217.5	105.5	234	326	2.5	1
385	650	39,500	66,000	DB	DF	291	179	234	326	2.5	1
560	975	57,000	99,000	DB	DF	244	114	238	382	3	1.5
805	1,450	82,000	148,000	DB	DF	284.5	108.5	242	438	4	2
251	405	25,600	41,000	DB	—	270.8	191	242	317.5	2	1.5
164	310	16,800	31,500	DB	DF	184	128	250	290	2	1
315	510	32,000	52,000	DB	DF	238	162	252	308	2	1
360	605	36,500	62,000	—	DF	204.5	124.5	252	317.5	2	1
320	530	32,500	54,000	DB	DF	279	199	252	317.5	2	1.5
320	530	32,500	54,000	DB	—	279	199	252	317.5	2	1.5
345	575	35,000	59,000	DB	DF	207.5	127.5	252	328	2	1.5
455	795	46,000	81,000	DB	DF	229.5	117.5	254	346	2.5	1
405	710	41,500	72,500	DB	DF	308	196	254	346	2.5	1
680	1,260	69,000	129,000	DB	DF	271	127	258	422	3	1.5
840	1,590	85,500	162,000	DB	DF	309	119	262	478	4	2
275	445	28,000	45,500	DB	—	282.5	212.5	262	328	2	1
380	650	38,500	66,000	DB	DF	219	127	264	335.5	2.5	1.5

Angular Contact Ball Bearings (Single, Duplex)

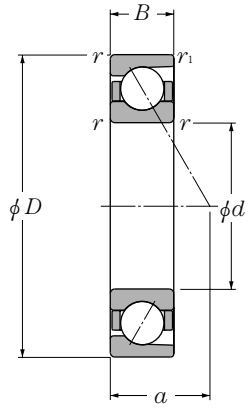

single

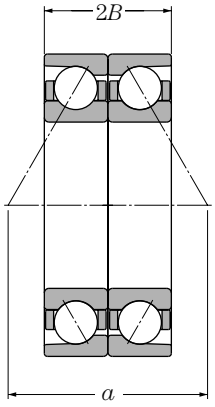

back-to-back arrangement (DB)

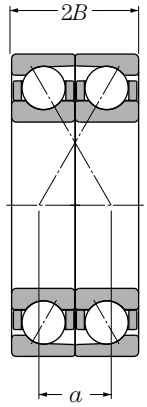

face-to-face arrangement (DF)

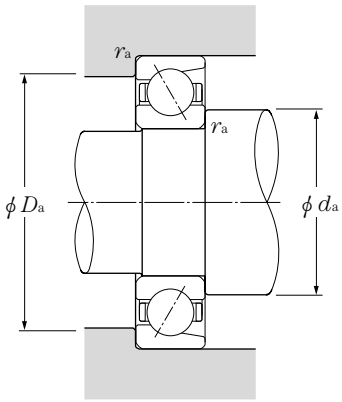

d 260～340mm

Boundary dimensions mm						contact angle	Basic load ratings dynamic kN	Basic load ratings static kN	Basic load ratings dynamic kgf	Basic load ratings static kgf	Bearing numbers	Drawing❶ No.	Load center	Mass
							single	single	single	single	single			single
													mm	kg
d	D	B	C	$r_{s\,min}$❷	$r_{ls\,min}$❷	α	C_r	C_{or}	C_r	C_{or}			a	(approx.)
260	320	28	—	2	1	30	127	192	12,900	19,600	**7852**	A	97.5	4.83
	360	46	—	2.1	1.1	30	258	375	26,300	38,000	**7952**	A	112	14
	369.5	46	—	2.5	1.5	40	235	340	23,900	34,500	**SF5206**	C	155	16.1
	369.5	46	—	2.5	1.5	40	235	340	23,900	34,500	**SF5225**	B	155	15.7
	369.5	46	—	2.5	1.5	40	235	340	23,900	34,500	**SF5224**	A	155	15.7
	369.5	46	—	2.5	1.5	30	242	350	24,700	35,500	**SF5210**	D	114	15.7
	379.5	56	—	4	2	40	264	385	26,900	39,500	**SF5218**	A	162.5	19.1
	400	65	—	4	1.5	30	315	455	32,000	46,500	**7052**	A	128	28.7
	400	65	—	4	1.5	40	282	410	28,700	41,500	**7052B**	A	171	29
	480	80	—	5	2	30	480	750	48,500	76,500	**7252**	A	147	66
	540	102	—	6	3	30	590	960	60,000	98,000	**7352**	A	166.5	115
280	350	33	—	2	1	30	164	247	16,700	25,200	**7856**	A	107.5	7.17
	380	46	—	2.1	1.1	30	261	385	26,600	39,500	**7956**	A	118	14.8
	389.5	46	—	2.1	1.1	40	223	325	22,700	33,000	**SF5606**	A	163.5	16
	389.5	46	—	2.5	1.5	30	250	370	25,500	38,000	**SF5608**	D	119.5	16
	420	65	—	4	1.5	30	390	595	40,000	60,500	**7056**	A	133.5	30.7
	420	65	—	4	1.5	40	350	540	35,500	55,000	**7056B**	A	179.5	30.9
	500	80	—	5	2	30	535	860	54,500	87,500	**7256**	A	152.5	69.7
	580	108	—	6	3	30	670	1,140	68,000	116,000	**7356**	A	178	140
285	380	46	—	2.5	2	40	206	305	21,000	31,000	**SF5702**	A	162.5	14.7
290	419.5	60	—	5	2.5	40	292	455	29,800	46,500	**SF5803**	B	179	26.9
300	380	38	—	2.1	1.1	30	193	290	19,700	29,500	**7860**	A	117	10.1
	420	56	—	3	1.1	30	325	520	33,500	53,000	**7960**	A	132	23.7
	460	74	—	4	1.5	30	440	715	45,000	73,000	**7060**	A	146.5	43.4
	460	74	—	4	1.5	40	395	645	40,500	66,000	**7060B**	A	196.5	43.7
	540	85	—	5	2	30	550	930	56,500	94,500	**7260**	A	164	87.2
310	429.5	60	—	4	2	40	297	470	30,500	48,000	**SF6203**	A	185.5	26.7
320	400	38	—	2.1	1.1	30	197	305	20,100	31,000	**7864**	A	123	10.7
	440	56	—	3	1.1	30	330	540	34,000	55,000	**7964**	A	137.5	24.7
	480	74	—	4	1.5	30	450	760	46,000	77,500	**7064**	A	152.5	45.7
	580	92	—	5	2	30	635	1,120	64,500	114,000	**7264**	A	176	109
340	420	38	—	2.1	1.1	30	204	325	20,800	33,500	**7868**	A	128.5	11.3

❶ Drawing details are shown in Page B-15.
❷ Smallest allowable dimension for chamfer dimension r or r_1.

Angular Contact Ball Bearings (Single, Duplex)

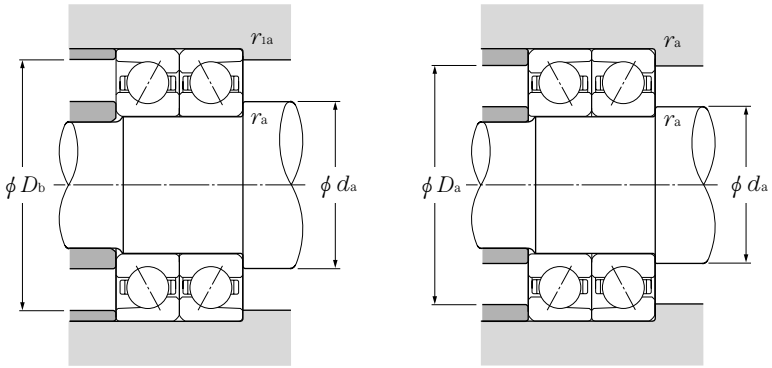

Equivalent bearing load

dynamic

$P_r = XF_r + YF_a$

Contact angle	e	Single				DB, DF			
		$F_a/F_r \leqq e$		$F_a/F_r > e$		$F_a/F_r \leqq e$		$F_a/F_r > e$	
		X	Y	X	Y	X	Y	X	Y
30°	0.80	1	0	0.39	0.76	1	0.78	0.63	1.24
40°	1.14	1	0	0.35	0.57	1	0.55	0.57	0.93

static

$P_{or} = X_o F_r + Y_o F_a$

Contact angle	Single		DB, DF	
	X_o	Y_o	X_o	Y_o
30°	0.5	0.33	1	0.66
40°	0.5	0.26	1	0.52

For single, When $P_{or} < F_r$ use $P_{or} = F_r$

Basic load ratings dynamic (duplex) KN C_r	Basic load ratings static (duplex) KN C_{or}	Basic load ratings dynamic (duplex) kgf C_r	Basic load ratings static (duplex) kgf C_{or}	Bearing numbers (duplex) DB	Bearing numbers (duplex) DF	Load center mm a DB	Load center mm a DF	Abutment and fillet dimensions mm d_a min	D_a max	r_{as} max	r_{las} max
206	385	21,000	39,000	DB	DF	195.5	139.5	270	310	2	1
420	750	42,500	76,500	DB	DF	270	178	272	348	2	1
380	680	39,000	69,000	—	DF	310.5	218.5	272	357.5	2	1.5
380	680	39,000	69,000	DB	—	310.5	218.5	272	357.5	2	1.5
380	680	39,000	69,000	DB	DF	310.5	218.5	272	357.5	2	1.5
395	695	40,000	71,000	DB	DF	228	136	272	357.5	2	1.5
430	775	44,000	79,000	DB	DF	324.5	212.5	278	361.5	3	2
510	905	52,000	92,500	DB	DF	255.5	125.5	278	382	3	1.5
458	820	46,500	83,500	DB	DF	342	212	278	382	3	1.5
775	1,500	79,000	153,000	DB	DF	294	134	282	458	4	2
960	1,920	98,000	196,000	DB	DF	333	129	288	512	5	2.5
267	495	27,200	50,500	DB	DF	215	148	290	340	2	1
425	775	43,000	79,000	DB	DF	282	190	292	368	2	1
360	650	37,000	66,500	DB	DF	327	235	292	377.5	2	1
405	745	41,500	76,000	DB	DF	239.5	147.5	292	377.5	2	1.5
635	1,190	64,500	121,000	DB	DF	267	137	298	402	3	1.5
570	1,080	58,000	110,000	DB	DF	359	229	298	402	3	1.5
870	1,720	88,500	175,000	DB	DF	305	145	258	478	4	2
1,080	2,270	111,000	232,000	DB	DF	356.5	140.5	308	552	5	2.5
335	605	34,000	62,000	DB	DF	325	233	297	368	2	2
475	910	48,500	93,000	DB	—	357.5	237.5	312	397.5	4	2
315	580	32,000	59,000	DB	DF	234.5	158.5	312	368	2	1
530	1,040	54,000	106,000	DB	DF	320	208	314	406	2.5	1
715	1,430	73,000	146,000	DB	DF	293.5	145.5	318	442	3	1.5
640	1,290	65,500	132,000	DB	DF	393	245	318	442	3	1.5
895	1,860	91,500	189,000	DB	DF	327.5	157.5	322	518	4	2
480	945	49,000	96,000	DB	—	370.5	250.5	328	411.5	3	2
320	610	32,500	62,000	DB	DF	246	170	332	388	2	1
540	1,080	55,000	110,000	DB	DF	275.5	163.5	334	426	2.5	1
735	1,520	75,000	155,000	DB	DF	305	152.5	338	462	3	1.5
1,030	2,230	105,000	228,000	DB	DF	352	168	342	558	4	2
330	650	34,000	66,500	DB	DF	257.5	181.5	352	408	2	1

Angular Contact Ball Bearings (Single, Duplex)

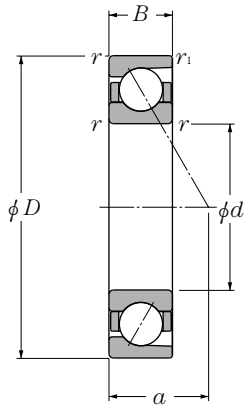

single

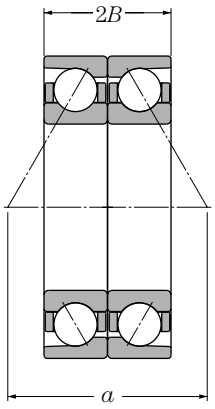

back-to-back arrangement (DB)

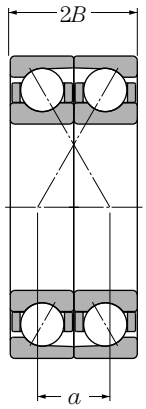

face-to-face arrangement (DF)

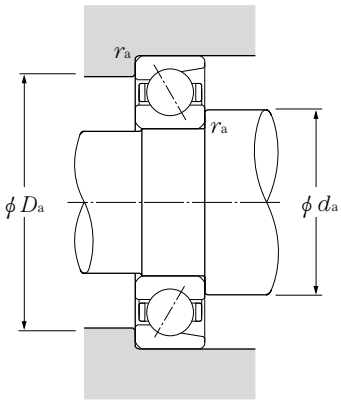

d 340～480mm

d	Boundary dimensions mm D	B	C	$r_{s\,min}$ ❷	$r_{ls\,min}$ ❷	contact angle α	Basic load ratings dynamic kN C_r	static kN C_{or}	dynamic single kgf C_r	static kgf C_{or}	Bearing numbers single	Drawing No. ❶	Load center mm a	Mass single kg (approx.)
340	460	56	—	3	1.1	30	345	575	35,000	59,000	**7968**	A	143.5	26.0
	479.5	65	—	4	2	30	395	680	40,500	69,500	**SF6807**	A	151	36.7
	520	82	—	5	2	30	520	905	53,000	92,500	**7068**	A	165	61.1
	620	92	—	5	2	30	650	1,200	66,500	122,000	**7268**	A	184.5	127
360	440	38	—	2.1	1.1	30	226	365	23,100	37,000	**7872**	A	134.5	11.9
	480	56	—	3	1.1	30	350	595	35,500	60,500	**7972**	A	149.5	27.3
	509.5	70	—	5	2	40	390	685	40,000	69,500	**SF7203**	A	217.5	45
	540	82	—	5	2	30	530	960	54,500	98,000	**7072**	A	171	63.4
	650	95	—	6	3	30	670	1,280	68,500	130,000	**7272**	A	193.5	143
380	480	46	—	2.1	1.1	30	281	475	28,700	48,500	**7876**	A	147	19.5
	519.5	65	—	4	2	40	345	610	35,500	62,500	**SF7603**	A	221.5	41.3
	520	65	—	4	1.5	30	390	700	40,000	71,000	**7976**	A	162.5	39.6
	540	164	—	4	2	40	440	810	45,000	83,000	**SF7601**	A	234	61
	560	82	—	5	2	30	545	1,010	55,500	103,000	**7076**	A	176.5	66.3
400	500	46	—	2.1	1.1	30	287	500	29,300	51,000	**7880**	A	153	20.4
	540	65	—	4	1.5	30	395	720	40,000	73,500	**7980**	A	168	41
	600	90	—	5	2	30	615	1,180	63,000	121,000	**7080**	A	189.5	86.1
420	520	46	—	2.1	1.1	30	310	555	31,500	56,500	**7884**	A	158.5	21.1
	560	65	—	4	1.5	30	410	765	41,500	78,000	**7984**	A	174	42.8
	620	90	—	5	2	30	630	1,250	64,500	127,000	**7084**	A	195	89.7
440	540	46	—	2.1	1.1	30	310	565	31,500	58,000	**7888**	A	164.5	22
	600	74	—	4	1.5	30	445	860	45,500	87,500	**7988**	A	187	59.3
	650	94	—	6	3	30	645	1,310	65,500	134,000	**7088**	A	204.5	103
460	540	40	—	2.1	1.1	30	249	455	25,400	46,000	**SF9211**	A	164.5	15.8
	580	56	—	3	1.1	30	380	725	39,000	74,000	**7892**	A	178	33.5
	620	74	—	4	1.5	30	450	885	46,000	90,000	**7992**	A	193	61.6
	680	100	—	6	3	30	720	1,510	73,500	154,000	**7092**	A	214.5	119
470	570	50	—	2.1	1.1	30	320	605	32,500	62,000	**SF9404**	A	175	25.7
480	600	56	—	3	1.1	30	390	760	40,000	77,500	**7896**	A	184	34.9
	650	78	—	5	2	30	530	1,090	54,000	111,000	**7996**	A	202	71.8
	700	100	—	6	3	30	715	1,520	73,000	155,000	**7096**	A	220.5	123

❶ Drawing details are shown in Page B-15.
❷ Smallest allowable dimension for chamfer dimension r or r_1.

Angular Contact Ball Bearings (Single, Duplex)

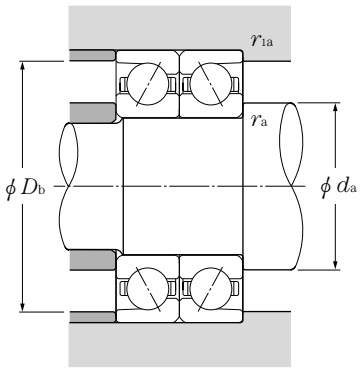

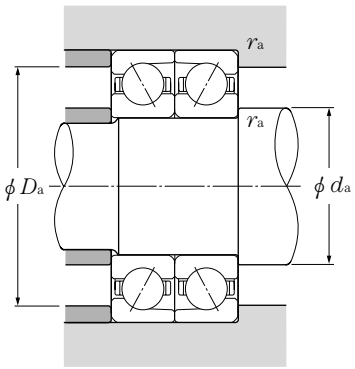

Equivalent bearing load

dynamic

$P_r = XF_r + YF_a$

Contact angle	e	Single				DB, DF			
		$F_a/F_r \leqq e$		$F_a/F_r > e$		$F_a/F_r \leqq e$		$F_a/F_r > e$	
		X	Y	X	Y	X	Y	X	Y
30°	0.80	1	0	0.39	0.76	1	0.78	0.63	1.24
40°	1.14	1	0	0.35	0.57	1	0.55	0.57	0.93

static

$P_{or} = X_o F_r + Y_o F_a$

Contact angle	Single		DB, DF	
	X_o	Y_o	X_o	Y_o
30°	0.5	0.33	1	0.66
40°	0.5	0.26	1	0.52

For single, When $P_{or} < F_r$ use $P_{or} = F_r$

Basic load ratings dynamic (duplex) KN C_r	Basic load ratings static (duplex) KN C_{or}	Basic load ratings dynamic kgf C_r	Basic load ratings static kgf C_{or}	Bearing numbers (duplex) DB	Bearing numbers (duplex) DF	Load center mm a DB	Load center mm a DF	Abutment and fillet dimensions mm d_a min	D_a max	r_{as} max	r_{las} max
560	1,150	57,000	118,000	DB	DF	287	175	354	446	2.5	1
645	1,360	65,500	139,000	—	DF	301.5	171.5	358	461.5	3	2
845	1,810	86,000	185,000	DB	DF	330.5	166.5	362	498	4	2
1,060	2,400	108,000	244,000	DB	DF	369	185	362	598	4	2
370	725	37,500	74,000	DB	DF	269	193	372	428	2	1
565	1,190	57,500	121,000	DB	DF	298.5	186.5	374	466	2.5	1
635	1,370	64,500	140,000	DB	—	435	295	382	487.5	4	2
865	1,920	88,000	196,000	DB	DF	342	178	382	518	4	2
1,090	2,550	111,000	260,000	DB	DF	386.5	196.5	388	622	5	2.5
455	955	46,500	97,500	DB	DF	294.5	202.5	392	468	2	1
565	1,220	57,500	125,000	DB	—	442.5	312.5	398	501.5	3	2
635	1,400	64,500	142,000	DB	DF	325	195	398	502	3	1.5
715	1,620	73,000	166,000	—	DF	468	304	398	522	3	2
865	1,920	88,000	196,000	DB	DF	342	178	402	538	4	2
465	1,000	47,500	102,000	DB	DF	306	214	412	488	2	1
640	1,440	65,500	147,000	DB	DF	336.5	206.5	418	522	3	1.5
1,000	2,370	102,000	241,000	DB	DF	379	199	422	578	4	2
505	1,110	51,500	113,000	DB	DF	317.5	225.5	432	508	2	1
660	1,530	67,500	156,000	DB	DF	348	218	438	542	3	1.5
1,030	2,500	105,000	255,000	DB	DF	390.5	210.5	442	598	4	2
505	1,130	51,500	116,000	DB	DF	329	237	452	528	2	1
720	1,720	73,500	175,000	DB	DF	374.5	226.5	458	582	3	1.5
1,050	2,630	107,000	268,000	DB	DF	409	221	468	622	5	2.5
405	905	41,500	92,500	DB	—	328.5	248.5	472	528	2	1
620	1,450	63,000	148,000	DB	DF	356.5	244.5	474	566	2.5	1
730	1,770	74,500	180,000	DB	DF	386	238	478	602	3	1.5
117	300	12,000	31,000	DB	DF	429	229	488	652	5	2.5
520	1,210	53,000	124,000	DB	—	350	250	482	558	2	1
635	1,520	64,500	155,000	DB	DF	368	256	494	586	2.5	1
860	2,180	88,000	223,000	DB	DF	404.5	248.5	502	628	4	2
1,170	3,050	119,000	310,000	DB	DF	441	241	508	672	5	2.5

Angular Contact Ball Bearings (Single, Duplex)

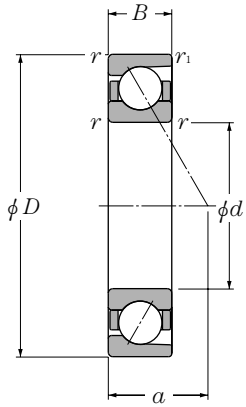

single

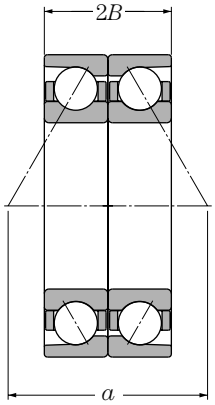

back-to-back arrangement (DB)

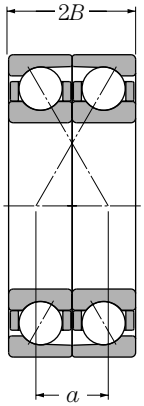

face-to-face arrangement (DF)

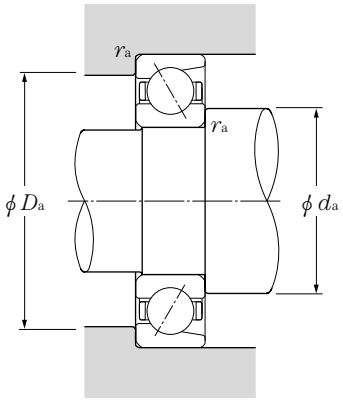

d 500～1,060mm

d	Boundary dimensions mm D	B	C	$r_{s\,min}$ ❷	$r_{ls\,min}$ ❷	contact angle α	Basic load ratings dynamic kN C_r	static kN C_{or}	dynamic single kgf C_r	static kgf C_{or}	Bearing numbers single	Drawing No. ❶	Load center mm a	Mass single kg (approx.)
500	620	56	—	3	1.1	30	395	780	40,000	79,500	**78/500**	A	189.5	36.5
	670	78	—	5	2	30	540	1,120	55,000	115,000	**79/500**	A	208	74.9
	720	100	—	6	3	30	735	1,590	75,000	163,000	**70/500**	A	226	129
560	700	100	—	5	2.5	30	670	1,450	68,000	147,000	**SF10013**	A	223	87.3
	750	85	—	5	2	30	620	1,380	63,500	141,000	**79/560**	A	231.5	105
630	780	69	—	4	1.5	30	500	1,140	51,000	116,000	**78/630A**	A	238	72.2
670	820	69	—	4	1.5	30	475	1,080	48,000	110,000	**78/670**	A	249.5	76.3
	820	69	—	4	1.5	40	420	945	43,000	96,500	**78/670B**	A	347	76.3
700	900	74	—	4	1.5	30	530	1,290	54,000	131,000	**SF14001**	A	268	117
1,000	1,420	130	—	7.5	4	30	1,440	4,650	147,000	470,000	**SF20001**	A	414.5	654
1,060	1,280	100	—	6	3	30	880	2,680	895,000	273,000	**78/1060**	A	387.5	255

❶ Drawing details are shown in Page B-15.
❷ Smallest allowable dimension for chamfer dimension r or r_1.

Angular Contact Ball Bearings (Single, Duplex)

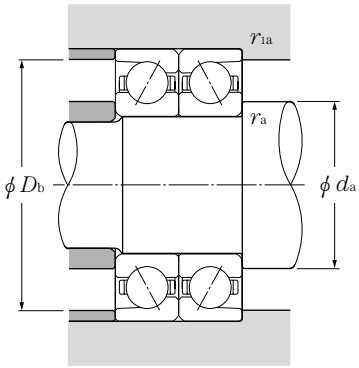

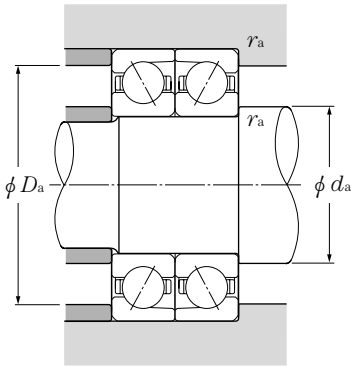

Equivalent bearing load

dynamic

$P_r = XF_r + YF_a$

Contact angle	e	Single				DB, DF			
		$F_a/F_r \leqq e$		$F_a/F_r > e$		$F_a/F_r \leqq e$		$F_a/F_r > e$	
		X	Y	X	Y	X	Y	X	Y
30°	0.80	1	0	0.39	0.76	1	0.78	0.63	1.24
40°	1.14	1	0	0.35	0.57	1	0.55	0.57	0.93

static

$P_{or} = X_o F_r + Y_o F_a$

Contact angle	Single		DB, DF	
	X_o	Y_o	X_o	Y_o
30°	0.5	0.33	1	0.66
40°	0.5	0.26	1	0.52

For single, When $P_{or} < F_r$ use $P_{or} = F_r$

Basic load ratings dynamic (duplex) KN C_r	Basic load ratings static (duplex) KN C_{or}	Basic load ratings dynamic (duplex) kgf C_r	Basic load ratings static (duplex) kgf C_{or}	Bearing numbers (duplex) DB	Bearing numbers (duplex) DF	Load center mm a DB	Load center mm a DF	Abutment and fillet dimensions mm d_a min	D_a max	r_{as} max	r_{las} max
640	1,560	65,000	159,000	**DB**	**DF**	379.5	267.5	514	606	2.5	1
875	2,250	89,000	229,000	**DB**	**DF**	416	260	522	648	4	2
1,190	3,200	122,000	325,000	**DB**	**DF**	452.5	252.5	528	692	5	2.5
1,080	2,890	111,000	295,000	**DB**	**DF**	446.5	246.5	522	678	4	2
1,010	2,760	103,000	281,000	**DB**	**DF**	463.5	293.5	582	728	4	2
815	2,270	83,000	232,000	**DB**	**DF**	476	338	648	762	3	1.5
770	2,150	78,500	219,000	**DB**	**DF**	499	361	688	802	3	1.5
680	1,890	69,500	193,000	**DB**	**DF**	694	556	688	802	3	1.5
860	2,580	88,000	263,000	**DB**	**DF**	536	388	718	882	3	1.5
2,340	9,250	238,000	945,000	**DB**	**DF**	828.5	568.5	1,036	1,384	6	3
1,430	5,350	146,000	545,000	**DB**	**DF**	775.5	575.5	1,088	1,252	5	2.5

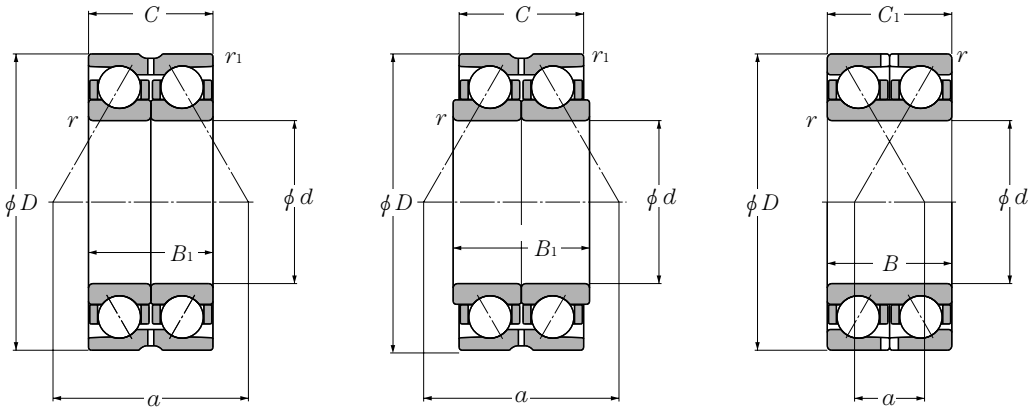

d 100～190mm

Boundary dimensions mm						Contact angle	Basic load ratings dynamic kN		Basic load ratings static kgf		Bearing numbers	Drawing No.[1]
d	D	B or B_1	C or C_1	$r_{s\,min}$[2]	$r_{1s\,min}$[2]	α	C_r	C_{or}	C_r	C_{or}		
100	170	60.3	60.3	2.5	2.5	40	160	179	16,300	18,200	DE2010	D
110	169.5	56	56	2.5	—	30	149	186	15,200	18,900	DE2208	B
120	190	66	66	2.5	1	30	187	236	19,000	24,100	DE2405	F
	190	66	66	2.5	1	30	187	236	19,000	24,100	DE2409	D
130	200	66	66	2.5	—	30	191	251	19,400	25,600	DE2601	B
140	210	66	66	2	—	40	203	266	20,700	27,100	DE2812	A
	210	66	66	1	—	40	179	248	18,300	25,300	DE2806	B
	210	66	66	2.5	—	30	194	265	19,800	27,000	DE2807	B
150	225	70	70	2.5	—	30	222	305	22,700	31,500	DE3010	A
	225	70	70	2.5	—	30	222	305	22,700	31,500	DE3011	B
	225	73	73	2.5	—	30	216	293	22,000	29,900	DE3009	A
	230	70	70	2.5	1.5	30	222	305	22,700	31,500	DE3007	F
	230	70	70	2	2	40	198	275	20,200	28,100	DE3019	D
160	215	56	50	2	1.1	40	123	186	12,500	18,900	DE3207	C
	240	76	76	2.5	—	30	252	355	25,700	36,000	DE3201	A
170	260	84	84	2.5	—	30	300	430	31,000	43,500	DE3402	A
175	280	92	92	2.5	—	40	320	480	32,500	49,000	DE3502	A
	280	92	92	2.5	—	40	320	480	32,500	49,000	DE3501	A
180	250	66	66	2.5	—	40	185	275	18,900	28,000	DE3606	A
	250	70	70	2.5	1	40	190	285	19,300	29,100	DE3609	F
	259.5	66	66	2.5	1	30	212	325	21,600	33,000	DE3610	D
	259.5	66	66	2.5	1	30	212	325	21,600	33,000	DE3601	F
	259.5	66	66	2.5	—	40	224	330	22,800	34,000	DE3608	B
	259.5	66	66	2	—	40	224	330	22,800	34,000	DE3615	A
	259.5	66	66	2.5	—	30	251	380	25,600	38,500	DE3603	A
	259.5	66	66	2.5	2.5	30	212	325	21,600	33,000	DE3612	D
	280	92	92	2.5	—	30	345	505	35,000	51,500	DE3605	A
190	269.5	66	66	2.5	1	30	215	335	21,900	34,500	DE3807	D
	269.5	66	66	2.5	1	30	215	335	21,900	34,500	DE3801	F

[1] Drawing details are shown in Page B-16.
[2] Smallest allowable dimension for chamfer dimension r or r_1.

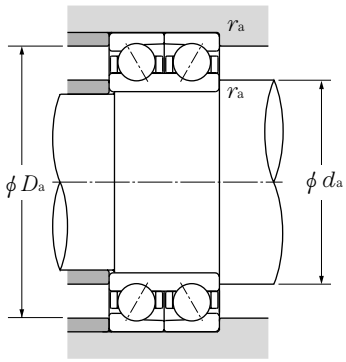

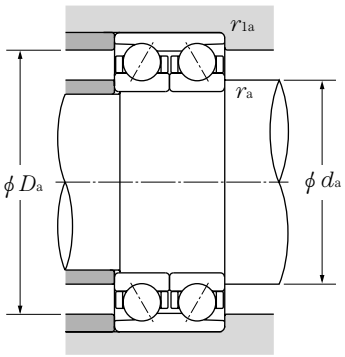

Equivalent bearing load

dynamic

$P_r = XF_r + YF_a$

Contact angle	e	Single				DB, DF			
		$F_a/F_r \leqq e$		$F_a/F_r > e$		$F_a/F_r \leqq e$		$F_a/F_r > e$	
		X	Y	X	Y	X	Y	X	Y
30°	0.80	1	0	0.39	0.76	1	0.78	0.63	1.24
40°	1.14	1	0	0.35	0.57	1	0.55	0.57	0.93

static

$P_{or} = X_o F_r + Y_o F_a$

Contact angle	Single		DB, DF	
	X_o	Y_o	X_o	Y_o
30°	0.5	0.33	1	0.66
40°	0.5	0.26	1	0.52

For single, When $P_{or} < F_r$ use $P_{or} = F_r$

Abutment and fillet dimensions mm				Load center mm	Mass kg
d_a min	D_a max	r_{as} max	r_{las} max	a	(approx.)
158	112	2	2	143	5.64
157.5	112	2	—	54.5	4.61
184.5	132	2	1	122	7.09
184.5	132	2	1	122	7.09
188	142	2	—	64	7.54
198	150	2	—	90	8
204.5	152	2	—	90	7.76
198	152	2	—	67	7.72
213	162	2	—	71.5	9.74
213	162	2	—	71.5	9.74
213	162	2	—	72.5	9.69
221.5	162	2	1.5	143	9.74
221.5	158.5	2	2	194	9.74
208	170	2	1	182	5.71
228	172	2	—	76.5	12
248	182	2	—	111	16.1
268	187	2	—	119	21.7
268	187	2	—	88.5	21.7
238	192	2	—	106	9.83
244.5	192	2	1	215	10.4
254	192	2	1	160	10.4
254	192	2	1	160	10.4
247.5	192	2	—	109	10.7
249.5	190	2	—	109	10.7
247.5	192	2	—	80	10.7
247.5	192	2	2	160	10.4
268	192	2	—	89.5	20.9
264	202	2	1	166	11.9
264	202	2	1	166	11.9

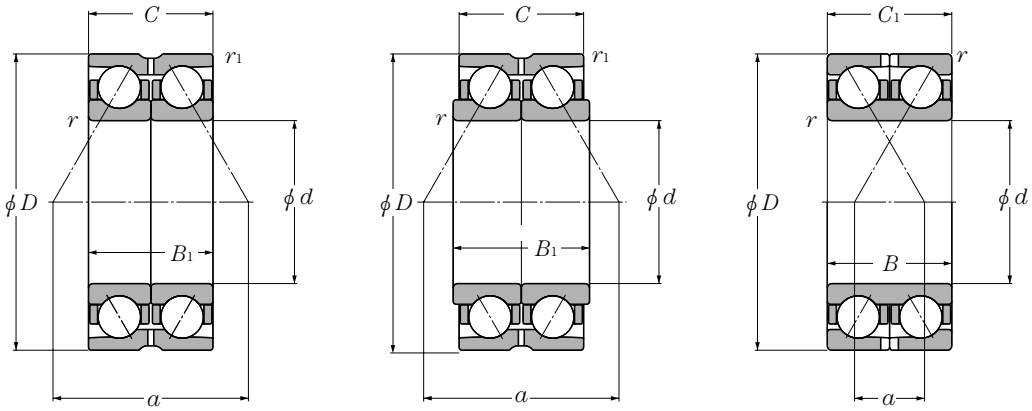

d 200～360mm

d	Boundary dimensions mm D	B or B1	C or C1	r s min ❷	r 1s min ❷	Contact angle α	Basic load ratings dynamic kN Cr	static kN Cor	dynamic kgf Cr	static kgf Cor	Bearing numbers	Drawing No.❶
200	279.5	76	76	2.5	1.5	30	253	405	25,800	41,500	DE4004	F
	279.5	76	76	2.5	—	30	253	405	25,800	41,500	DE4008	B
	289.5	76	76	2.5	1.5	40	260	385	26,500	39,500	DE4010	G
	289.5	76	76	2.5	2.1	30	269	420	27,500	42,500	DE4019	D
	289.5	76	76	2.5	1.5	30	269	420	27,500	42,500	DE4009	F
	289.5	76	76	2.5	1.5	30	269	420	27,500	42,500	DE4002	F
	289.5	76	76	2.5	1.5	30	269	420	27,500	42,500	DE4012	D
	310	102	102	2.5	—	30	410	650	41,500	66,000	DE4007	A
220	309.5	76	76	2.5	—	30	325	520	33,000	53,000	DE4403	A
	309.5	76	76	2.5	—	30	325	520	33,000	53,000	DE4404	A
	309.5	76	76	2.1	1.1	30	325	520	33,000	53,000	DE4408	D
	319.5	92	92	2.5	—	30	375	625	38,500	63,500	DE4409	A
	319.5	92	92	2.5	—	40	335	550	34,500	56,000	DE4406	A
230	329.5	80	80	2.5	1.5	30	350	585	36,000	59,500	DE4602	F
	329.5	80	80	2.5	1.5	30	350	585	36,000	59,500	DE4603	D
	329.5	80	80	2.5	1.5	30	350	585	36,000	59,500	DE4605	E
240	359.5	112	112	3	1.5	40	440	770	45,000	78,500	DE4803	F
250	340	76	70	2	2	30	272	480	27,800	49,000	DE5004	C
260	369.5	92	92	2.5	—	40	380	680	39,000	69,000	DE5213	A
	369.5	92	92	2.5	—	30	430	775	43,500	79,000	DE5211	A
	369.5	92	92	2.5	2.5	30	395	695	40,000	71,000	DE5212	F
280	389.5	92	92	2.1	1.1	30	405	745	41,500	76,000	DE5605	D
300	429.5	112	112	3	—	30	530	1,040	54,000	106,000	DE6001	A
360	540	164	164	5	—	30	725	1,630	74,000	166,000	DE7201	A

❶ Drawing details are shown in Page B-16.
❷ Smallest allowable dimension for chamfer dimension r or r_1.

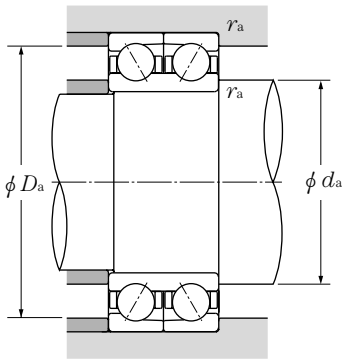

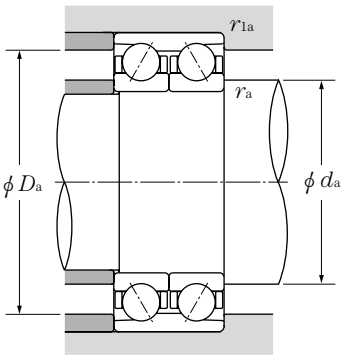

Equivalent bearing load

dynamic

$P_r = XF_r + YF_a$

Contact angle	e	Single				DB, DF			
		$F_a/F_r \leqq e$		$F_a/F_r > e$		$F_a/F_r \leqq e$		$F_a/F_r > e$	
		X	Y	X	Y	X	Y	X	Y
30°	0.80	1	0	0.39	0.76	1	0.78	0.63	1.24
40°	1.14	1	0	0.35	0.57	1	0.55	0.57	0.93

static

$P_{or} = X_o F_r + Y_o F_a$

Contact angle	Single		DB, DF	
	X_o	Y_o	X_o	Y_o
30°	0.5	0.33	1	0.66
40°	0.5	0.26	1	0.52

For single, When $P_{or} < F_r$ use $P_{or} = F_r$

Abutment and fillet dimensions mm				Load center mm	Mass kg
d_a min	D_a max	r_{as} max	r_{las} max	a	(approx.)
271	212	2	1.5	177	14.3
267.5	212	2	—	88.5	14.3
281	212	2	1.5	244	16.5
277.5	212	2	2	179	16.4
281	212	2	1.5	180	16.4
281	212	2	1.5	179	16.4
281	212	2	1.5	179	16.4
298	212	2	—	99	28.3
297.5	232	2	—	95.5	17.8
297.5	232	2	—	95.5	17.8
302.5	232	2	1	191	17.8
307.5	232	2	—	101	24.4
307.5	232	2	—	136	24.4
321	242	2	1.5	202	22
321	242	2	1.5	202	22
321	242	2	1.5	202	22
351	254	2.5	1.5	308	39.7
328	262	2	2	208	18.4
357.5	272	2	—	155	31.3
357.5	272	2	—	114	31.3
357.5	272	2	2	228	30.9
382.5	292	2	1	239	33.4
417.5	312	2.5	—	132	52.4
518	382	4	—	171	131

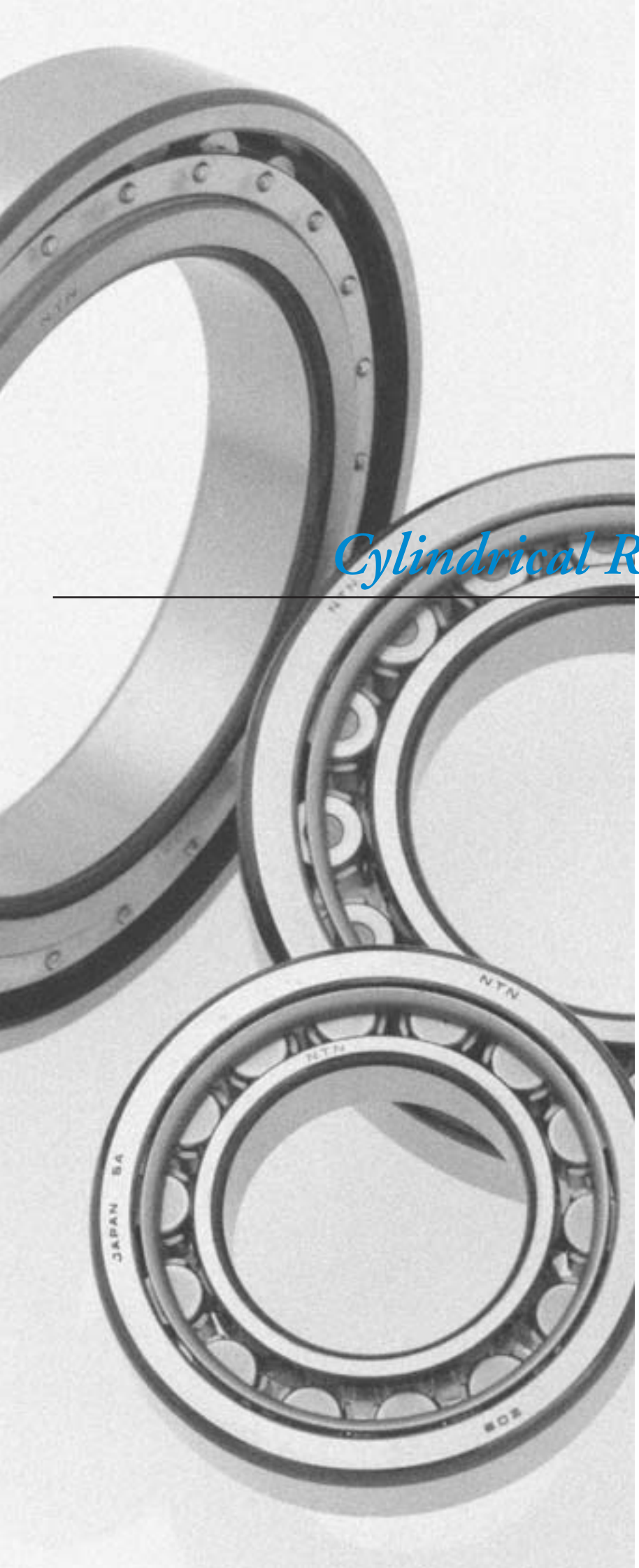

Cylindrical Roller Bearings

1. Structure and Characteristics

Since the rollers of the cylindrical roller bearings make line contact with the raceways, these bearings can support heavy radial loads and are suitable for high speed operation.

Assembly and disassembly are comparatively easy even if the inner or outer ring requires a shrink fit, as the bearing is a separation type.

Cylindrical roller bearings are classified as single row, double row and four row type, according to how many rollers are used, and there are models as shown in **Table 1** to **3**.

Although designed as a thin wall type, the SL Model double row cylindrical roller bearing can support enormous radial and impact loads. **Table 4** lists the configurations available.

Table 1 Model and characteristics of the single row cylindrical roller bearings

Model code	Drawing	Characteristics
Model NU **Model N**	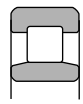 **Model NU** **Model N**	● Model NU has ribs on the outer ring and the inner ring can be separated from "the arranged set of outer ring, rollers and cage". Model N has ribs on the inner ring and the outer ring can be separated from "the arranged set of inner ring, rollers and cage". ● This bearing cannot support axial loads. ● The most suitable model widely used as the free end bearing.
Model NJ **Model NF**	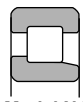 **Model NJ** 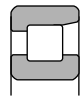 **Model NF**	● Model NJ has ribs on the outer ring and a rib on the inner ring. Model NF has a rib on the outer ring and ribs on the inner ring. ● These bearings support axial loads in one direction only. ● There may be a case to use two bearings adjacent when they are used regardless of the fixed end or free end.
Model NUP **Model NH (NJ+HJ)**	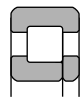 **Model NUP** 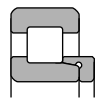 **Model NH**	● Model NUP has a rib ring added on the side of the inner ring where it did not have a rib. Model NJ with the added ring rib of Model L is Model NH. The inner ring should be fixed along the axial direction since each ring rib will be separated. ● These bearings support axial loads in either direction. ● There may be a case to use as the fixed end bearing.

Note: Model E provides higher load capacity designed with increased diameter,length and numbers of rollers but the boundary dimensions are same as the standard type bearings.

Table 2 Model and characteristics of the double row cylindrical roller bearings

Model code	Drawing	Characteristics
Model NNU **Model NN**	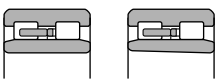 **Model NNU** **Cylindrical hole Tapered hole** 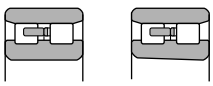 **Model NN** **Cylindrical hole Tapered hole**	● These bearings are used in the main shaft of machine tools, rolling mill rolls and printing machine plate cylinders where thin walled bearings are needed. ● To use the bearing in the main shaft of machine tools, adjust the radial internal clearance by inserting a tapered inner ring to the tapered shaft.

Table 3 Models and characters of four row cylindrical roller bearings

Drawing	Characteristics
Refer to the drawings. **Drawing numbers are listed in the dimensions table.**	● The bearing is mainly used for the roll neck of a rolling mill, and is designed so as to handle the maximum rating load for the allowable space in the roll neck part. Carbonized steel may be used to provide better resistance to cracking or impact to the inner ring. ● Consult **NTN** Engineering about the fitting and bearing internal clearance when the bearing is used for the preparing roll of a rolling mill. ● **NTN** provides bearings with special configurations: with tapered shaft holes; for high speed use; designed to prevent creeping; and, with dust and waterproof seals.

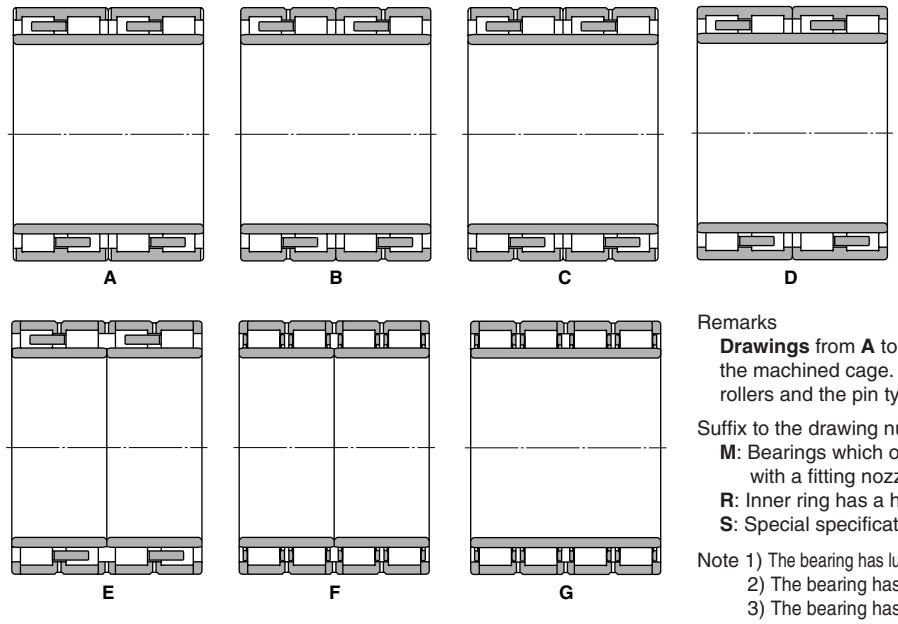

Remarks
Drawings from **A** to **E** show the long cylindrical rollers and the machined cage. **Drawings** from **F** to **G** show the hollow rollers and the pin type cage.

Suffix to the drawing number
M: Bearings which outer ring lubrication port is equipped with a fitting nozzle for oil mist.
R: Inner ring has a helical groove on its inner surface.
S: Special specifications.

Note 1) The bearing has lubricant grooves on both sides of the inner rings.
2) The bearing has lubricant grooves on one of the inner rings.
3) The bearing has lubricant grooves on one of the outer rings.
4) No lubricant groove and hole is designed on the outer ring spacer.

Drawings

Table 4 Model and Characteristics of the Model SL cylindrical roller bearings

	Model	Characteristics
Open type	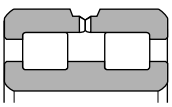 Model SL01 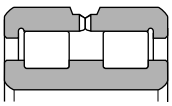 Model SL02	● Fixed end is Model SL01, free end is Model SL02. ● Since the outer ring is split in the circumference direction using a special method and fixed as a unit after mounting rollers, **the bearing side face should be securely fixed using the shaft or housing shoulder in the axial direction.** ● Outer ring has an oil groove and port. ● Model SL01 can support axial loads from both directions via rollers. ● Shoulder dimensions of shaft and bearings generally applies D_a and d_a dimensions in the dimensions table, but J and K dimensions are used when the moment or large axial loads are applied.
Enclosed type	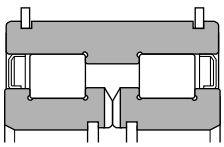 Model SL04	● Model SL04 only with the fixed side. ● Since the inner ring is split in the circumference direction using a special method and fixed as a unit after mounting rollers, the bearing side face should be securely fixed by using the shaft or housing shoulder in the axial direction. ● Inner ring has an oil groove and port. ● Model SL04 can support radial and axial loads in either directions. ● A sealed bearing prelubricated with grease, the outer ring is fitted with a locating snap ring, making it easy to handle and appropriate for sheaves and other applications. ● Surface coating is added for rust prevention.

Note: We also provide 3-row, 4-row and 5-row bearings for the Model SL cylindrical roller bearing. Consult **NTN** Engineering for further details.

2. Dimensional Accuracy/Rotation Accuracy

Refer to Table 3.3 (Page A-12,13)

3. Recommended Fitting

Refer to Table 4.2 (Page A-24)

4. Bearing Internal Clearance

Refer to Table 5.5 and 5.6 (Page A-31, 32, 33)

5. Permissible slant angle

It varies according to the bearing type and internal specifications, the values in the table below are widely used to avoid edge loads under general load conditions.

When the width series is 0 or 1 ·····0.001 rad (3.5')
When the width series is 2 ·····0.0005 rad (1.5')
Double row cylindrical roller bearing ❶ ···0.0005 rad (1.5')

❶ This is no applied to high accuracy bearings which are used as the main shaft of machine tools.

Table 5 Tolerance of inscribed circle diameter F_w of rollers and circumscribed circle diameter E_w of rollers for compatible bearings.

Unit μm

d mm		ΔF_w		ΔE_w	
over	Incl	high	low	low	high
50	120	+ 20	0	0	- 20
120	200	+ 25	0	0	- 25
200	250	+ 30	0	0	- 30
250	315	+ 35	0	0	- 35
315	400	+ 40	0	0	- 40
400	500	+ 45	0	0	- 45
500	630	+ 70	0	0	- 70
630	800	+ 80	0	0	- 80
800	1,000	+ 90	0	0	- 90
1,000	1,250	+105	0	0	-105
1,250	1,400	+125	0	0	-125

ΔF_w : Dimensional difference of inscribed circle diameter of rollers.❷
ΔE_w : Dimensional difference of circumscribed circle diameter of rollers.❷
❷ Regulation range of JIS is $d \leqq 500$mm for ΔF_w, and $d \leqq 400$mm for ΔE_w.

Table 6 Radial internal clearance of Model SL cylindrical roller bearing.

Unit μm

Nominal bore diameter d mm		CN (Normal)		C 3		C 4	
over	Incl	min	max	min	max	min	max
30	50	20	75	40	95	55	110
50	80	30	90	55	115	75	135
80	120	35	105	80	150	105	175
120	180	60	150	110	200	150	240
180	250	90	190	155	255	205	305
250	315	110	225	195	310	255	370
315	400	140	265	245	370	320	445
400	500	180	320	300	440	395	535

6. Radial internal clearance of the Model SL cylindrical roller bearings.

Table 6 lists the radial internal clearance values of the Model SL cylindrical roller bearings.

7. Recommended fit of the Model SL cylindrical roller bearings, and selection of the radial internal clearance.

Table 7 lists the recommended fit for outer ring rotation such as sheaves and wheels, **Table 8** lists the relation between the fitting and the radial internal clearance.

For assembling and disassembling the bearing, it is necessary to evenly load around the circumference of the raceway end on the fitting side.

8. General Operating Cautions

Slippage between the rollers and raceways may occur when bearings are operated under small loads (about $F_r \leqq 0.04C_{or}$) and may cause smearing. This is most apparent when using large size cylindrical roller bearings due to the large cage mass. Please consult **NTN** Engineering for further details.

Table 7 Recommended fit

Conditions		Tolerance range class of shaft	Tolerance range class of housing
Outer ring rotating load	Heavy load with a thin walled housing.	g6 or h6	P7
	Normal load, heavy load		N7 ❸
	Light load, changing load		M7

❸ Be sure to use N7 for sheaves.

Table 8 Relation between fit and radial internal clearance.

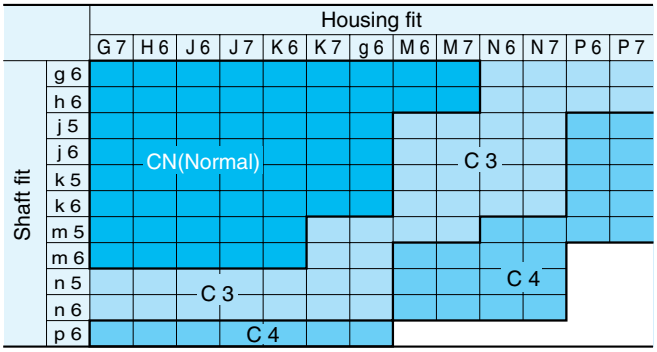

Note: When the shaft fit is g6, housing fit is N7(N6) and used at low speed (for sheaves), apply CN(normal) clearance.

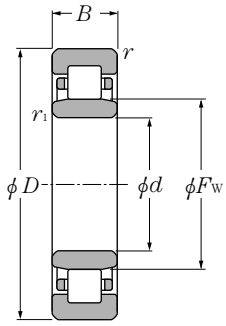

Type NU

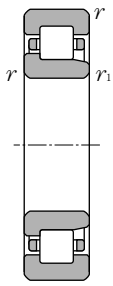

Type NJ

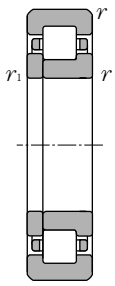

Type NUP

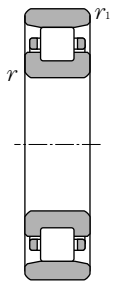

Type N

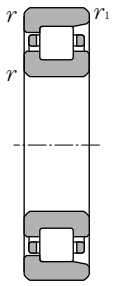

Type NF

d 100～120mm

Boundary dimensions mm					Basic load ratings dynamic kN	static kN	dynamic kgf	static kgf	Bearing numbers type NU	Dimensions mm
d	D	B	$r_{s\,min}$ ❶	$r_{ls\,min}$ ❶	C_r	C_{or}	C_r	C_{or}		F_w
100	140	20	1.1	1	70.0	98.0	7,100	10,000	NU1920	110
	150	24	1.5	1.1	93.0	126	9,500	12,800	NU1020	113
	180	34	2.1	2.1	183	217	18,600	22,200	NU220	120
	180	34	2.1	2.1	249	305	25,400	31,000	NU220E	119
	180	46	2.1	2.1	258	340	26,300	34,500	NU2220	120
	180	46	2.1	2.1	335	445	34,000	45,500	NU2220E	119
	215	47	3	3	299	335	30,500	34,500	NU320	129.5
	215	47	3	3	380	425	38,500	43,500	NU320E	127.5
	215	73	3	3	410	505	42,000	51,500	NU2320	129.5
	215	73	3	3	570	715	58,000	73,000	NU2320E	127.5
105	160	26	2	1.1	105	142	10,700	14,500	NU1021	119.5
	190	36	2.1	2.1	201	241	20,500	24,600	NU221	126.8
	190	65.1	2.1	2.1	360	505	36,500	51,500	NU3221	126.8
	225	49	3	3	320	360	32,500	36,500	NU321	135
110	150	20	1.1	1	72.5	106	7,400	10,800	NU1922	120
	170	28	2	1.1	131	174	13,400	17,700	NU1022	125
	200	38	2.1	2.1	240	290	24,500	29,500	NU222	132.5
	200	38	2.1	2.1	293	365	29,800	37,000	NU222E	132.5
	200	53	2.1	2.1	320	415	32,500	42,000	NU2222	132.5
	200	53	2.1	2.1	385	515	39,000	52,500	NU2222E	132.5
	200	69.8	2.1	2.1	425	605	43,500	62,000	NU3222	132.5
	240	50	3	3	360	400	36,500	41,000	NU322	143
	240	50	3	3	450	525	46,000	53,500	NU322E	143
	240	80	3	3	605	790	61,500	80,500	NU2322	143
	240	80	3	3	675	880	69,000	89,500	NU2322E	143
	240	92.1	3	3	715	985	73,000	100,000	NU3322A	143
120	165	22	1.1	1	89.5	134	9,150	13,700	NU1924	132
	165	27	1.1	1	116	188	11,900	19,100	NU2924	132
	180	28	2	1.1	139	191	14,100	19,500	NU1024	135
	215	40	2.1	2.1	260	320	26,500	32,500	NU224	143.5
	215	40	2.1	2.1	335	420	34,000	43,000	NU224E	143.5
	215	58	2.1	2.1	350	460	35,500	47,000	NU2224	143.5
	215	58	2.1	2.1	450	620	46,000	63,000	NU2224E	143.5
	215	76	2.1	2.1	540	815	55,000	83,000	NU3224	143.5
	260	55	3	3	450	510	46,000	52,000	NU324	154
	260	55	3	3	530	610	54,000	62,000	NU324E	154

❶ Minimal allowable dimension for chamfer dimension r or r_1.

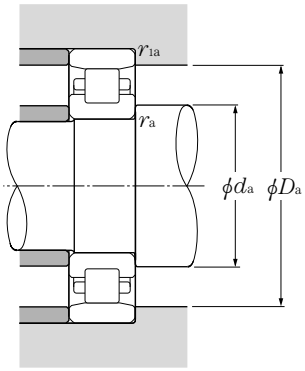

Type N

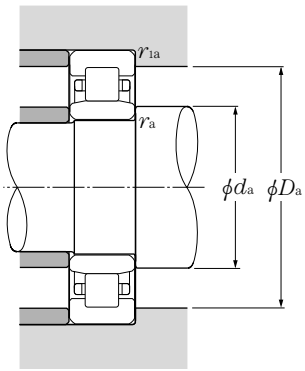

Type NU

Equivalent bearing load

dynamic

$P_r = F_r$

static

$P_{or} = F_r$

Abutment and fillet dimensions				Mass
mm				kg
d_a min	D_a max	r_{as} max	r_{las} max	type **NU** (approx.)
105	133.5	1	1	1.01
106.5	142	1.5	1	1.45
111	169	2	2	3.33
111	169	2	2	3.66
111	169	2	2	4.57
111	169	2	2	5.01
113	202	2.5	2.5	7.49
113	202	2.5	2.5	8.57
113	202	2.5	2.5	11.7
113	202	2.5	2.5	12.8
111.5	151	2	1	1.84
116	179	2	2	3.95
116	179	2	2	8.25
118	212	2.5	2.5	8.53
115	143.5	1	1	1.09
116.5	161	2	1	2.33
121	189	2	2	4.63
121	189	2	2	4.27
121	189	2	2	6.56
121	189	2	2	7.4
121	189	2	2	9.85
123	227	2.5	2.5	10
123	227	2.5	2.5	11.1
123	227	2.5	2.5	17.1
123	227	2.5	2.5	19.4
123	227	2.5	2.5	20.2
125	158.5	1	1	1.48
125	158.5	1	1	1.81
126.5	171	2	1	2.44
131	204	2	2	5.57
131	204	2	2	5.97
131	204	2	2	8.19
131	204	2	2	9.18
131	204	2	2	12.2
133	247	2.5	2.5	12.8
133	247	2.5	2.5	13.9

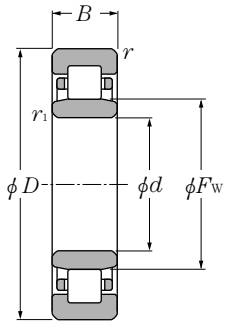

Type NU

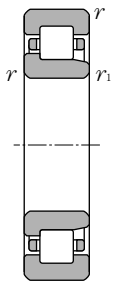

Type NJ

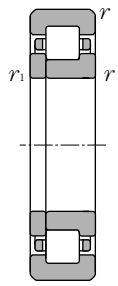

Type NUP

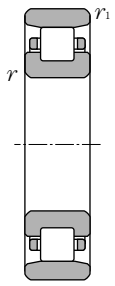

Type N

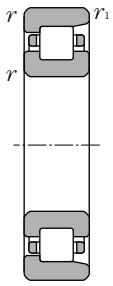

Type NF

d 120～150mm

Boundary dimensions mm					Basic load ratings dynamic kN	static kN	dynamic kgf	static kgf	Bearing numbers type NU	Dimensions mm
d	D	B	$r_{s\,min}$ ❶	$r_{ls\,min}$ ❶	C_r	C_{or}	C_r	C_{or}		F_w
120	260	86	3	3	710	920	72,500	93,500	NU2324	154
	260	86	3	3	795	1,030	81,000	105,000	NU2324E	154
	260	106	3	3	845	1,150	86,000	117,000	NU3324	154
130	180	24	1.5	1.1	106	161	10,800	16,400	NU1926	143
	180	30	1.5	1.1	149	248	15,200	25,300	NU2926	143
	200	33	2	1.1	172	238	17,500	24,200	NU1026	148
	230	40	3	3	270	340	27,600	35,000	NU226	156
	230	40	3	3	365	455	37,000	46,000	NU226E	153.5
	230	64	3	3	380	530	38,500	54,000	NU2226	156
	230	64	3	3	530	735	54,000	75,000	NU2226E	153.5
	230	80	3	3	600	955	61,000	97,500	NU3226	156
	280	58	4	4	560	665	57,000	68,000	NU326	167
	280	58	4	4	615	735	63,000	75,000	NU326E	167
	280	93	4	4	840	1,130	85,500	115,000	NU2326	167
	280	93	4	4	920	1,230	94,000	126,000	NU2326E	167
	280	112	4	4	975	1,360	99,500	139,000	NU3326	167
140	190	30	1.5	1.1	151	258	15,400	26,300	NU2928	153
	210	33	2	1.1	176	250	17,900	25,500	NU1028	158
	210	53	2	2	350	585	36,000	60,000	NU3028	158
	250	42	3	3	310	400	31,500	40,500	NU228	169
	250	42	3	3	395	515	40,000	52,500	NU228E	169
	250	68	3	3	445	635	45,500	64,500	NU2228	169
	250	68	3	3	575	835	58,500	85,000	NU2228E	169
	250	88	3	3	695	1,120	70,500	114,000	NU3228	169
	300	62	4	4	615	745	63,000	76,000	NU328	180
	300	62	4	4	665	795	67,500	81,500	NU328E	180
	300	102	4	4	920	1,250	94,000	127,000	NU2328	180
	300	102	4	4	1,020	1,380	104,000	141,000	NU2328E	180
150	210	28	2	1.1	147	219	15,000	22,300	NU1930	165
	210	36	2	1.1	204	335	20,800	34,000	NU2930	165
	225	35	2.1	1.5	202	294	20,600	29,900	NU1030	169.5
	270	45	3	3	345	435	35,000	44,500	NU230	182
	270	45	3	3	450	595	45,500	60,500	NU230E	182
	270	73	3	3	500	710	51,000	72,500	NU2230	182
	270	73	3	3	660	980	67,500	100,000	NU2230E	182
	270	96	3	3	800	1,300	81,500	132,000	NU3230	182

❶ Minimal allowable dimension for chamfer dimension r or r_1.

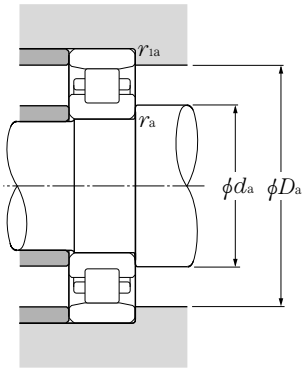

Type N

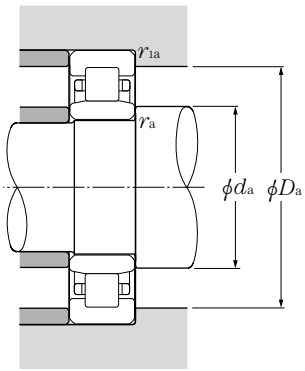

Type NU

Equivalent bearing load
dynamic
$P_r = F_r$

static
$P_{or} = F_r$

Abutment and fillet dimensions				Mass
mm				kg
d_a min	D_a max	r_{as} max	r_{las} max	type **NU** (approx.)
133	247	2.5	2.5	21.5
133	247	2.5	2.5	26.1
133	247	2.5	2.5	27.1
136.5	172	1.5	1	1.95
136.5	172	1.5	1	2.44
136.5	191	2	1	3.69
143	217	2.5	2.5	6.3
143	217	2.5	2.5	6.9
143	217	2.5	2.5	10.2
143	217	2.5	2.5	11.8
143	217	2.5	2.5	14.6
146	264	3	3	17.4
146	264	3	3	19.4
146	264	3	3	26.9
146	264	3	3	30.9
146	264	3	3	33.1
146.5	182	1.5	1	2.59
146.5	201	2	1	4.05
149	201	2	2	6.8
153	237	2.5	2.5	7.88
153	237	2.5	2.5	8.73
153	237	2.5	2.5	12.9
153	237	2.5	2.5	15.8
153	237	2.5	2.5	19.1
156	284	3	3	21.2
156	284	3	3	23.2
156	284	3	3	33.8
156	284	3	3	38.7
156.5	201	2	1	3.17
156.5	201	2	1	4.08
158	214	2	1.5	4.77
163	257	2.5	2.5	9.92
163	257	2.5	2.5	11
163	257	2.5	2.5	16.3
163	257	2.5	2.5	19.7
163	257	2.5	2.5	24.5

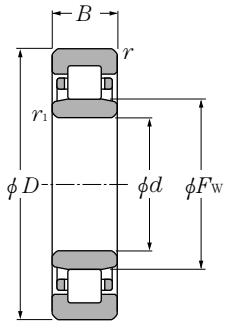

Type NU

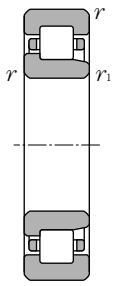

Type NJ

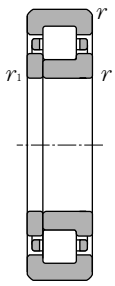

Type NUP

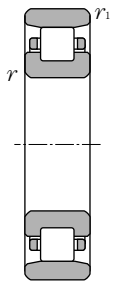

Type N

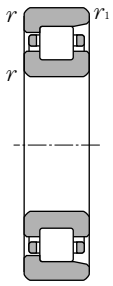

Type NF

d 150～180mm

Boundary dimensions mm					Basic load ratings dynamic kN	static kN	dynamic kgf	static kgf	Bearing numbers type NU	Dimensions mm
d	D	B	$r_{s\,min}$ ❶	$r_{ls\,min}$ ❶	C_r	C_{or}	C_r	C_{or}		F_w
150	320	65	4	4	665	805	67,500	82,500	NU330	193
	320	65	4	4	760	920	77,500	94,000	NU330E	193
	320	108	4	4	1,020	1,400	104,000	143,000	NU2330	193
	320	108	4	4	1,160	1,600	118,000	163,000	NU2330E	193
160	220	28	2	1.1	154	236	15,700	24,100	NU1932	175
	220	36	2	1.1	213	360	21,700	36,500	NU2932	175
	240	38	2.1	1.5	238	340	24,200	35,000	NU1032	180
	270	86	2.1	2.1	400	565	40,500	57,500	NU3132	189
	290	48	3	3	430	570	43,500	58,000	NU232	195
	290	48	3	3	500	665	51,000	68,000	NU232E	195
	290	80	3	3	630	940	64,500	96,000	NU2232	195
	290	80	3	3	810	1,190	82,500	121,000	NU2232E	193
	340	68	4	4	700	875	71,000	89,500	NU332	208
	340	68	4	4	860	1,050	87,500	107,000	NU332E	204
	340	114	4	4	1,070	1,520	109,000	155,000	NU2332	208
	340	114	4	4	1,310	1,820	134,000	186,000	NU2332E	204
170	230	28	2	1.1	160	254	16,300	25,900	NU1934	185
	230	36	2	1.1	222	385	22,600	39,500	NU2934	185
	260	42	2.1	2.1	278	400	28,300	41,000	NU1034	193
	310	52	4	4	475	635	48,500	65,000	NU234	208
	310	52	4	4	605	800	61,500	81,500	NU234E	207
	310	86	4	4	715	1,080	73,000	110,000	NU2234	208
	310	86	4	4	965	1,410	98,500	144,000	NU2234E	205
	310	110	4	4	1,020	1,690	104,000	172,000	NU3234	208
	360	72	4	4	795	1,010	81,500	103,000	NU334	220
	360	120	4	4	1,220	1,750	125,000	179,000	NU2334	220
180	250	33	2	1.1	215	335	21,900	34,000	NU1936	197
	250	42	2	1.1	293	495	29,900	50,500	NU2936	197
	280	46	2.1	2.1	340	485	35,000	49,500	NU1036	205
	280	74	2.1	2.1	610	1,030	62,000	105,000	NU3036	205
	320	52	4	4	495	675	50,500	69,000	NU236	218
	320	52	4	4	625	850	64,000	87,000	NU236E	217
	320	86	4	4	745	1,140	76,000	117,000	NU2236	218
	320	86	4	4	1,010	1,510	103,000	154,000	NU2236E	215
	320	112	4	4	1,010	1,700	103,000	174,000	NU3236	218
	380	75	4	4	905	1,150	92,000	118,000	NU336	232

❶ Minimal allowable dimension for chamfer dimension r or r_1.

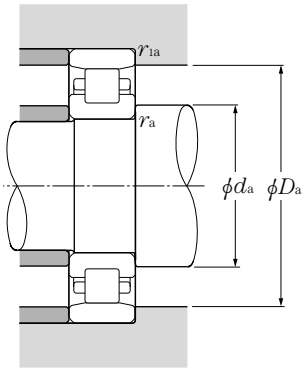

Type N

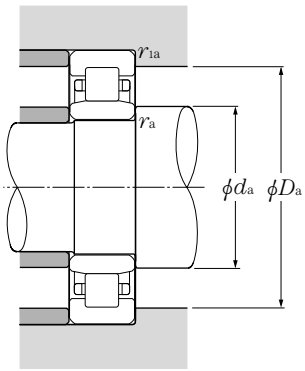

Type NU

Equivalent bearing load
dynamic
$P_r = F_r$

static
$P_{or} = F_r$

Abutment and fillet dimensions				Mass
mm				kg
d_a min	D_a max	r_{as} max	r_{las} max	type **NU** (approx.)
166	304	3	3	25.3
166	304	3	3	28.4
166	304	3	3	40.6
166	304	3	3	47.2
166.5	211	2	1	3.35
166.5	211	2	1	4.3
168	229	2	1.5	5.9
171	259	2	2	20.6
173	277	2.5	2.5	13.7
173	277	2.5	2.5	15.6
173	277	2.5	2.5	22
173	277	2.5	2.5	25.1
176	324	3	3	31.3
176	324	3	3	34
176	324	3	3	50.5
176	324	3	3	56
176.5	221	2	1	3.52
176.5	221	2	1	4.53
181	249	2	2	7.88
186	294	3	3	17
186	294	3	3	19.6
186	294	3	3	27.2
186	294	3	3	31
186	294	3	3	37.4
186	344	3	3	37
186	344	3	3	59.5
186.5	241	2	1	5.21
186.5	241	2	1	6.63
191	269	2	2	10.3
191	269	2	2	17.8
196	304	3	3	17.7
196	304	3	3	20.4
196	304	3	3	28.4
196	304	3	3	31.9
196	304	3	3	39.6
196	364	3	3	44.2

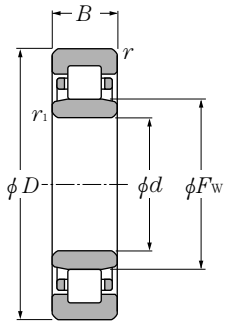

Type NU

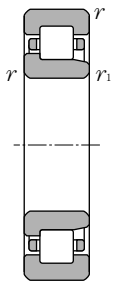

Type NJ

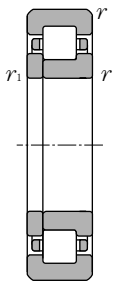

Type NUP

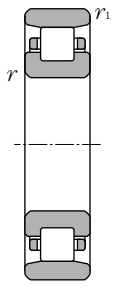

Type N

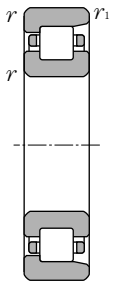

Type NF

d 180～240mm

Boundary dimensions mm					Basic load ratings dynamic kN	static kN	dynamic kgf	static kgf	Bearing numbers type NU	Dimensions mm
d	D	B	$r_{s\,min}$ ❶	$r_{ls\,min}$ ❶	C_r	C_{or}	C_r	C_{or}		F_w
180	380	126	4	4	1,380	1,990	141,000	203,000	NU2336	232
	380	150	4	4	1,600	2,410	163,000	246,000	NU3336	232
190	260	42	2	1.1	299	515	30,500	52,500	NU2938	207
	290	46	2.1	2.1	350	510	36,000	52,000	NU1038	215
	340	55	4	4	555	770	56,500	78,500	NU238	231
	340	55	4	4	695	955	71,000	97,500	NU238E	230
	340	92	4	4	830	1,290	84,500	131,000	NU2238	231
	340	92	4	4	1,100	1,670	113,000	170,000	NU2238E	228
	340	120	4	4	1,240	2,160	126,000	220,000	NU3238	231
	400	78	5	5	975	1,260	99,500	129,000	NU338	245
	400	132	5	5	1,520	2,220	155,000	226,000	NU2338	245
	400	155	5	5	1,550	2,280	158,000	233,000	NU3338	245
200	280	38	2.1	2.1	259	405	26,400	41,500	NU1940	220
	280	48	2.1	1.5	365	630	37,000	64,500	NU2940	220
	310	51	2.1	2.1	390	580	40,000	59,500	NU1040	229
	310	82	2.1	2.1	735	1,240	75,000	127,000	NU3040	227
	340	112	3	3	1,130	1,820	115,000	186,000	NU3140A	235
	360	58	4	4	620	865	63,500	88,500	NU240	244
	360	58	4	4	765	1,060	78,000	108,000	NU240E	243
	360	98	4	4	925	1,440	94,000	147,000	NU2240	244
	360	98	4	4	1,220	1,870	125,000	191,000	NU2240E	241
	360	128	4	4	1,260	2,150	128,000	219,000	NU3240	244
	420	80	5	5	975	1,270	99,500	130,000	NU340	260
	420	138	5	5	1,510	2,240	154,000	229,000	NU2340	260
	420	165	5	5	1,870	2,930	190,000	299,000	NU3340	260
220	300	48	2.1	1.5	390	705	39,500	72,000	NU2944	240
	340	56	3	3	500	750	51,000	76,500	NU1044	250
	340	90	3	3	860	1,490	87,500	152,000	NU3044	250
	370	120	4	4	1,180	2,090	120,000	213,000	NU3144	262
	400	65	4	4	760	1,080	77,500	110,000	NU244	270
	400	108	4	4	1,140	1,810	116,000	184,000	NU2244	270
	400	144	4	4	1,540	2,680	157,000	273,000	NU3244	270
	460	88	5	5	1,190	1,570	122,000	161,000	NU344	284
	460	145	5	5	1,780	2,620	181,000	268,000	NU2344	284
240	320	48	2.1	1.5	400	755	41,000	77,000	NU2948	260

❶ Minimal allowable dimension for chamfer dimension r or r_1.

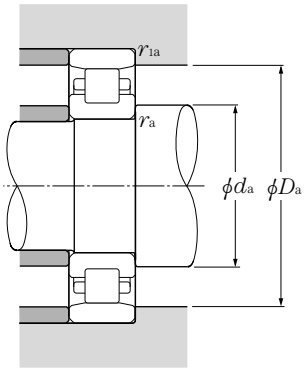

Type N

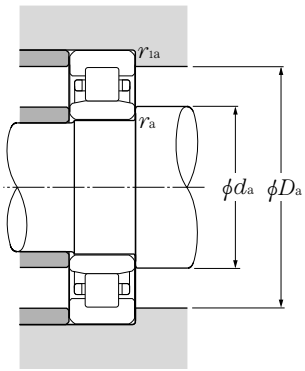

Type NU

Equivalent bearing load
dynamic
$P_r = F_r$

static
$P_{or} = F_r$

Abutment and fillet dimensions				Mass
mm				kg
d_a min	D_a max	r_{as} max	r_{las} max	type **NU** (approx.)
196	364	3	3	69.5
196	364	3	3	88
196.5	251	2	1	6.93
201	279	2	2	10.7
206	324	3	3	21.3
206	324	3	3	24.2
206	324	3	3	34.4
206	324	3	3	39.5
206	324	3	3	48.2
210	380	4	4	49.4
210	380	4	4	80.5
210	380	4	4	101
211	269	2	2	7.65
208	269	2	1.5	9.66
211	299	2	2	13.9
211	299	2	2	24.1
213	327	2.5	2.5	42.8
216	344	3	3	25.3
216	344	3	3	28.1
216	344	3	3	41.3
216	344	3	3	47.8
216	344	3	3	58
220	400	4	4	55.8
220	400	4	4	92.6
220	400	4	4	118
231	289	2	1.5	10.5
233	327	2.5	2.5	18.2
233	327	2.5	2.5	31.7
236	354	3	3	55.7
236	384	3	3	37.7
236	384	3	3	59
236	384	3	3	84.2
240	440	4	4	73.4
240	440	4	4	116
248	309	2	1.5	11.3

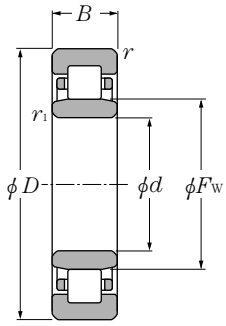

Type NU

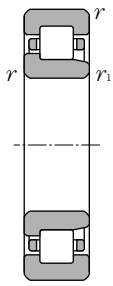

Type NJ

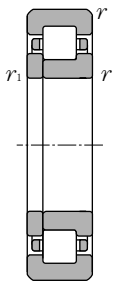

Type NUP

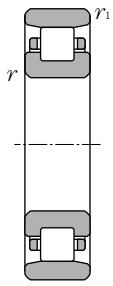

Type N

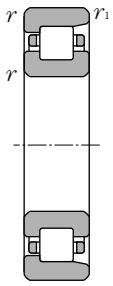

Type NF

d 240～320mm

Boundary dimensions mm					Basic load ratings dynamic kN	static kN	dynamic kgf	static kgf	Bearing numbers type NU	Dimensions mm
d	D	B	$r_{s\,min}$ ❶	$r_{ls\,min}$ ❶	C_r	C_{or}	C_r	C_{or}		F_w
240	360	56	3	3	530	820	54,000	83,500	NU1048	270
	360	92	3	3	940	1,710	95,500	174,000	NU3048	270
	440	72	4	4	935	1,340	95,500	136,000	NU248	295
	440	120	4	4	1,440	2,320	146,000	236,000	NU2248	295
	500	95	5	5	1,430	1,950	146,000	198,000	NU348	310
	500	155	5	5	2,100	3,200	214,000	325,000	NU2348	310
260	360	46	2.1	2.1	400	665	41,000	67,500	NU1952	285
	360	60	2.1	2.1	545	985	55,500	100,000	NU2952	285
	400	65	4	4	645	1,000	65,500	102,000	NU1052	296
	400	104	4	4	1,150	2,020	117,000	206,000	NU3052	294
	440	144	4	4	1,810	3,150	185,000	320,000	NU3152	305
	480	80	5	5	1,150	1,660	117,000	170,000	NU252	320
	480	130	5	5	1,780	2,930	182,000	299,000	NU2252	320
	540	102	6	6	1,620	2,230	165,000	228,000	NU352	336
	540	165	6	6	2,340	3,600	239,000	365,000	NU2352	336
	540	206	6	6	2,930	4,800	299,000	490,000	NU3352	336
280	380	46	2.1	2.1	415	710	42,500	72,500	NU1956	305
	380	60	2.1	2.1	565	1,060	58,000	108,000	NU2956	305
	420	65	4	4	660	1,050	67,000	107,000	NU1056	316
	420	106	4	4	1,240	2,260	126,000	230,000	NU3056	314
	500	80	5	5	1,190	1,760	121,000	180,000	NU256	340
	500	130	5	5	1,840	3,100	188,000	315,000	NU2256	340
	580	108	6	6	1,820	2,540	185,000	259,000	NU356	362
	580	175	6	6	2,700	4,250	275,000	430,000	NU2356	362
300	380	60	2.1	2.1	505	1,230	51,500	125,000	NU3860	324
	420	56	3	3	560	935	57,000	95,500	NU1960	330
	420	72	3	3	780	1,440	79,500	147,000	NU2960	330
	460	74	4	4	855	1,340	87,000	137,000	NU1060	340
	460	118	4	4	1,610	3,000	164,000	305,000	NU3060	340
	540	85	5	5	1,400	2,070	143,000	211,000	NU260	364
	540	140	5	5	2,180	3,650	223,000	370,000	NU2260	364
	620	185	7.5	7.5	3,250	5,150	330,000	525,000	NU2360	385
320	400	60	2.1	2.1	525	1,310	53,500	134,000	NU3864	344
	440	56	3	3	580	1,010	59,500	103,000	NU1964	350
	480	74	4	4	875	1,410	89,500	143,000	NU1064	360

❶ Minimal allowable dimension for chamfer dimension r or r_1.

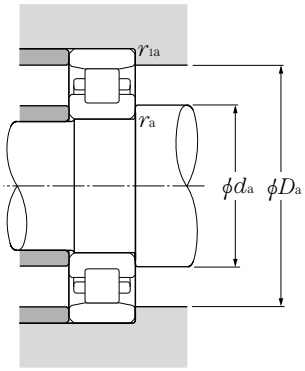

Type N

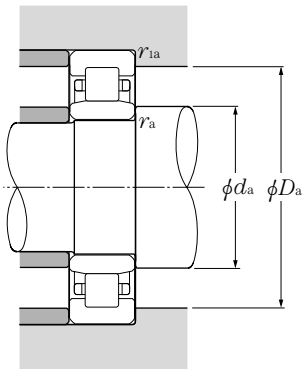

Type NU

Equivalent bearing load
dynamic
$P_r = F_r$

static
$P_{or} = F_r$

Abutment and fillet dimensions				Mass
mm				kg
d_a min	D_a max	r_{as} max	r_{las} max	type **NU** (approx.)
253	347	2.5	2.5	19.6
253	347	2.5	2.5	34.7
256	424	3	3	50.2
256	424	3	3	80
260	480	4	4	93.4
260	480	4	4	147
271	349	2	2	14.9
271	349	2	2	19.5
276	384	3	3	29.1
276	384	3	3	50.4
276	424	3	3	95.1
280	460	4	4	66.9
280	460	4	4	104
284	516	5	5	117
284	516	5	5	182
284	516	5	5	242
291	369	2	2	15.9
291	369	2	2	20.8
296	404	3	3	30.9
296	404	3	3	54.4
300	480	4	4	70.8
300	480	4	4	109
304	556	5	5	142
304	556	5	5	222
311	369	2	2	17.1
313	407	2.5	2.5	25.4
313	407	2.5	2.5	32.6
316	444	3	3	43.6
316	444	3	3	75.2
320	520	4	4	88.2
320	520	4	4	138
332	588	6	6	316
331	389	2	2	18.1
333	427	2.5	2.5	26.8
336	464	3	3	46

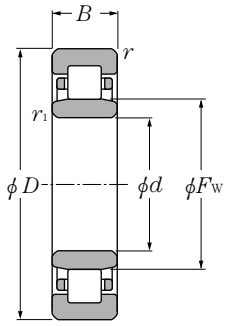

Type NU

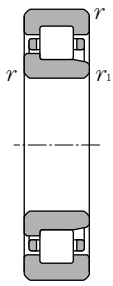

Type NJ

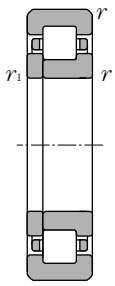

Type NUP

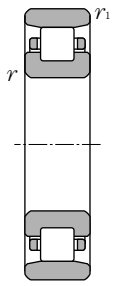

Type N

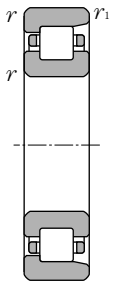

Type NF

d 320～420mm

Boundary dimensions mm					Basic load ratings dynamic kN	static kN	dynamic kgf	static kgf	Bearing numbers type NU	Dimensions mm
d	D	B	$r_{s\,min}$ ❶	$r_{ls\,min}$ ❶	C_r	C_{or}	C_r	C_{or}		F_w
320	480	121	4	4	1,580	2,890	161,000	295,000	NU3064	358
	540	176	5	5	2,530	4,550	258,000	465,000	NU3164	376
	580	92	5	5	1,600	2,390	164,000	244,000	NU264	390
	580	150	5	5	2,550	4,350	260,000	445,000	NU2264	390
	670	200	7.5	7.5	3,750	5,800	385,000	595,000	NU2364	410
340	460	56	3	3	590	1,040	60,500	107,000	NU1968	370
	460	72	3	3	830	1,610	84,500	164,000	NU2968	370
	520	82	5	5	1,050	1,670	107,000	170,000	NU1068	385
	520	133	5	5	2,030	3,900	207,000	400,000	NU3068	385
	580	190	5	5	3,050	5,450	310,000	555,000	NU3168	400
	620	165	6	6	2,880	4,650	294,000	475,000	NU2268	410
	620	224	6	6	4,000	7,100	410,000	725,000	NU3268	410
	710	118	7.5	7.5	2,250	3,300	230,000	340,000	NU368	450
	710	212	7.5	7.5	4,250	6,600	430,000	675,000	NU2368	435
360	440	60	2.1	2.1	460	1,090	47,000	111,000	NU3872	382
	480	56	3	3	615	1,120	62,500	114,000	NU1972	390
	480	72	3	3	860	1,720	87,500	176,000	NU2972	390
	540	82	5	5	1,080	1,750	110,000	179,000	NU1072	405
	540	134	5	5	1,990	4,200	202,000	430,000	NU3072	413
	600	192	5	5	3,150	5,500	320,000	560,000	NU3172A	416
	650	232	6	6	4,150	7,600	425,000	775,000	NU3272	435
	750	224	7.5	7.5	4,500	7,000	460,000	710,000	NU2372	460
380	520	65	4	4	740	1,330	75,500	136,000	NU1976	416
	520	82	4	4	1,110	2,230	113,000	227,000	NU2976	416
	560	82	5	5	1,100	1,840	112,000	187,000	NU1076	425
	560	135	5	5	2,200	4,450	224,000	455,000	NU3076	426
	680	175	6	6	3,350	5,800	340,000	590,000	NU2276	460
	680	240	6	6	4,300	7,650	440,000	780,000	NU3276	460
400	500	75	2.1	2.1	870	2,250	88,500	229,000	NU3880	430
	600	90	5	5	1,320	2,190	134,000	223,000	NU1080	450
	600	148	5	5	2,520	5,050	257,000	515,000	NU3080	450
420	560	65	4	4	800	1,510	81,500	154,000	NU1984	456
	560	82	4	4	1,190	2,530	122,000	258,000	NU2984	456
	620	90	5	5	1,350	2,290	138,000	233,000	NU1084	470

❶ Minimal allowable dimension for chamfer dimension r or r_1.

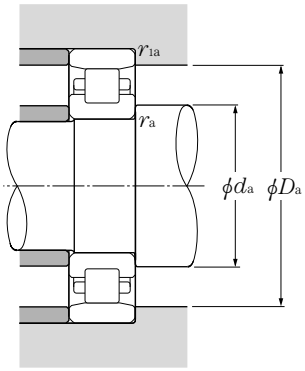

Type N

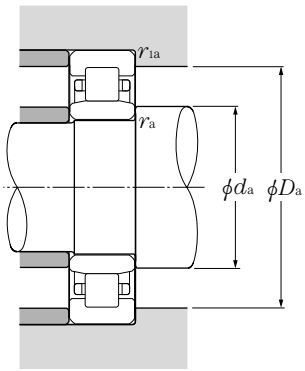

Type NU

Equivalent bearing load
dynamic
$P_r = F_r$

static
$P_{or} = F_r$

Abutment and fillet dimensions				Mass
mm				kg
d_a min	D_a max	r_{as} max	r_{las} max	type **NU** (approx.)
336	464	3	3	81.2
340	520	4	4	175
340	560	4	4	111
340	560	4	4	172
352	638	6	6	402
353	447	2.5	2.5	28.2
353	447	2.5	2.5	36.2
360	500	4	4	61.8
360	500	4	4	108
360	560	4	4	220
364	596	5	5	260
364	596	5	5	316
372	678	6	6	246
372	678	6	6	477
371	429	2	2	20.1
373	467	2.5	2.5	29.6
373	467	2.5	2.5	38
380	520	4	4	64.7
380	520	4	4	114
380	580	4	4	232
384	626	5	5	356
392	718	6	6	562
396	504	3	3	42.9
396	504	3	3	54.1
400	540	4	4	67.5
400	540	4	4	120
404	656	5	5	326
404	656	5	5	400
411	489	2	2	35.4
420	580	4	4	87.6
420	580	4	4	155
436	544	3	3	46.7
436	544	3	3	59
440	600	4	4	91

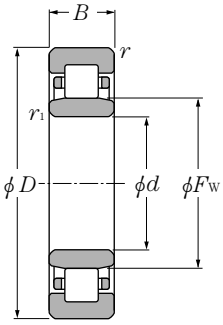

Type NU

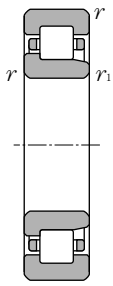

Type NJ

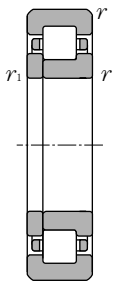

Type NUP

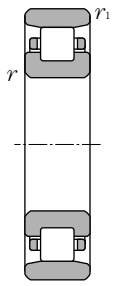

Type N

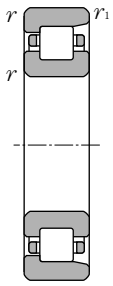

Type NF

d 440～670mm

Boundary dimensions mm					Basic load ratings dynamic kN	static kN	dynamic kgf	static kgf	Bearing numbers type NU	Dimensions mm
d	D	B	$r_{s\,min}$ ❶	$r_{ls\,min}$ ❶	C_r	C_{or}	C_r	C_{or}		F_w
440	600	95	4	4	1,520	3,100	155,000	320,000	NU2988	480
	650	94	6	6	1,430	2,430	146,000	248,000	NU1088	493
	650	157	6	6	2,770	5,700	283,000	580,000	NU3088	493
460	580	72	3	3	990	2,230	101,000	227,000	NU2892	490
	680	100	6	6	1,540	2,630	157,000	269,000	NU1092	516
480	650	78	5	5	1,140	2,150	116,000	219,000	NU1996	523
	650	100	5	5	1,640	3,450	168,000	350,000	NU2996	523
	700	100	6	6	1,580	2,750	161,000	280,000	NU1096	536
500	620	72	3	3	1,030	2,390	105,000	244,000	NU28/500	530
	670	78	5	5	1,160	2,220	118,000	226,000	NU19/500	543
	720	100	6	6	1,610	2,870	164,000	292,000	NU10/500	556
530	710	82	5	5	1,290	2,480	132,000	253,000	NU19/530	576
	710	106	5	5	1,870	4,000	191,000	410,000	NU29/530	576
	780	112	6	6	1,930	3,450	197,000	350,000	NU10/530	595
	780	185	6	6	3,650	7,400	375,000	755,000	NU30/530	590
560	680	72	3	3	1,090	2,680	111,000	273,000	NU28/560	590
	680	90	3	3	1,250	3,200	127,000	325,000	NU38/560	590
	750	85	5	5	1,470	2,840	150,000	290,000	NU19/560	607
	750	112	5	5	2,010	4,250	205,000	435,000	NU29/560	607
	820	115	6	6	2,190	3,900	223,000	400,000	NU10/560	626
600	730	78	3	3	1,210	3,000	124,000	310,000	NU28/600	633
	800	90	5	5	1,620	3,200	165,000	325,000	NU19/600	650
	800	118	5	5	2,270	4,950	231,000	505,000	NU29/600	650
	870	200	6	6	4,450	9,350	455,000	955,000	NU30/600	670
630	780	88	4	4	1,520	3,650	155,000	370,000	NU28/630	667
	850	100	6	6	1,910	3,700	195,000	380,000	NU19/630	684
	850	128	6	6	2,710	5,850	277,000	595,000	NU29/630	684
	920	128	7.5	7.5	2,560	4,650	261,000	475,000	NU10/630	705
670	820	88	4	4	1,580	3,900	161,000	395,000	NU28/670	707
	820	112	4	4	2,010	5,500	205,000	560,000	NU38/670	709
	900	103	6	6	1,980	3,950	202,000	405,000	NU19/670	729

❶ Minimal allowable dimension for chamfer dimension r or r_1.

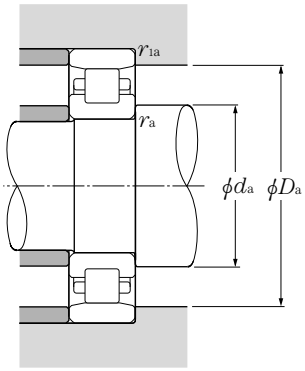

Type N

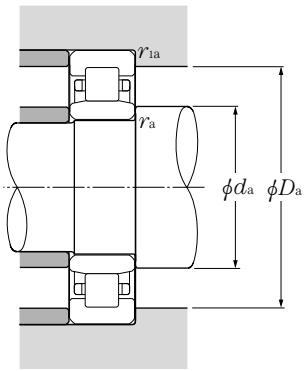

Type NU

Equivalent bearing load
dynamic
$P_r = F_r$

static
$P_{or} = F_r$

Abutment and fillet dimensions				Mass
mm				kg
d_a min	D_a max	r_{as} max	r_{las} max	type **NU** (approx.)
456	584	3	3	82.8
464	626	5	5	105
464	626	5	5	188
473	567	2.5	2.5	47.1
484	656	5	5	122
500	630	4	4	78.5
560	630	4	4	101
504	676	5	5	126
513	607	2.5	2.5	50.7
520	650	4	4	81.3
524	696	5	5	130
550	690	4	4	95.9
550	690	4	4	124
554	756	5	5	192
554	756	5	5	318
573	667	2.5	2.5	56.1
573	667	2.5	2.5	72.7
580	730	4	4	111
580	730	4	4	146
584	796	5	5	216
613	717	2.5	2.5	70.7
620	780	4	4	132
620	780	4	4	173
624	846	5	5	416
646	764	3	3	97.5
654	826	5	5	171
654	826	5	5	218
662	888	6	6	302
686	804	3	3	103
686	804	3	3	136
694	876	5	5	195

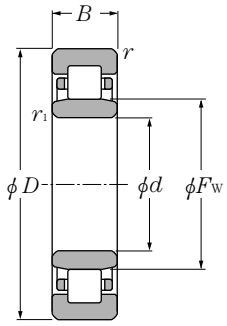

Type NU

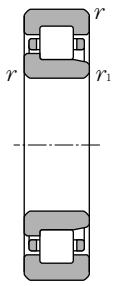

Type NJ

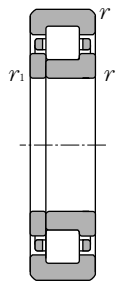

Type NUP

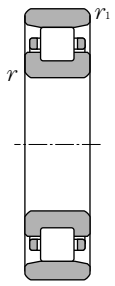

Type N

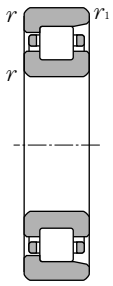

Type NF

d 670～1,250mm

Boundary dimensions mm					Basic load ratings dynamic kN	static kN	dynamic kgf	static kgf	Bearing numbers type NU	Dimensions mm
d	*D*	*B*	$r_{s\,min}$ ❶	$r_{1s\,min}$ ❶	C_r	C_{or}	C_r	C_{or}		F_w
670	900	136	6	6	2,940	6,600	300,000	675,000	**NU29/670**	729
710	950	106	6	6	2,260	4,600	231,000	465,000	**NU19/710**	770
	950	140	6	6	3,300	7,500	340,000	765,000	**NU29/710**	770
750	1,000	112	6	6	2,340	4,850	239,000	495,000	**NU19/750**	815
	1,000	145	6	6	3,600	8,400	365,000	860,000	**NU29/750**	815
800	980	106	5	5	2,310	5,950	236,000	605,000	**NU28/800**	845
	1,060	150	6	6	3,850	8,850	390,000	900,000	**NU29/800**	865
	1,150	155	7.5	7.5	4,100	7,800	415,000	795,000	**NU10/800**	887
850	1,030	106	5	5	2,390	6,350	244,000	645,000	**NU28/850**	895
	1,120	118	6	6	2,920	6,150	297,000	625,000	**NU19/850**	917
	1,120	155	6	6	4,000	9,250	410,000	945,000	**NU29/850**	917
1,060	1,400	195	7.5	7.5	6,100	14,500	620,000	1,480,000	**NU29/1060**	1,145
1,180	1,540	206	7.5	7.5	6,900	17,000	705,000	1,730,000	**NU29/1180**	1,270
1,250	1,630	170	7.5	7.5	5,550	12,500	565,000	1,280,000	**NU19/1250**	1,345

❶ Minimal allowable dimension for chamfer dimension r or r_1.

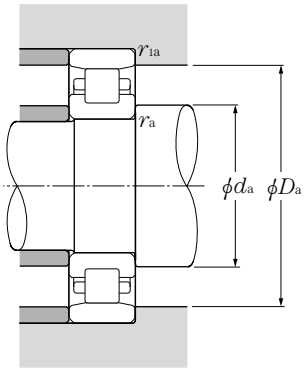

Type N

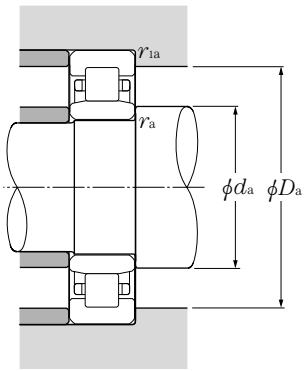

Type NU

Equivalent bearing load
dynamic
$P_r = F_r$

static
$P_{or} = F_r$

Abutment and fillet dimensions				Mass
mm				kg
d_a min	D_a max	r_{as} max	r_{las} max	type **NU** (approx.)
694	876	5	5	257
734	926	5	5	221
734	926	5	5	292
774	976	5	5	257
774	976	5	5	332
820	960	4	4	178
824	1,036	5	5	380
832	1,118	6	6	554
870	1,010	4	4	188
874	1,096	5	5	329
874	1,096	5	5	432
1,092	1,368	6	6	855
1,212	1,508	6	6	1,060
1,282	1,598	6	6	975

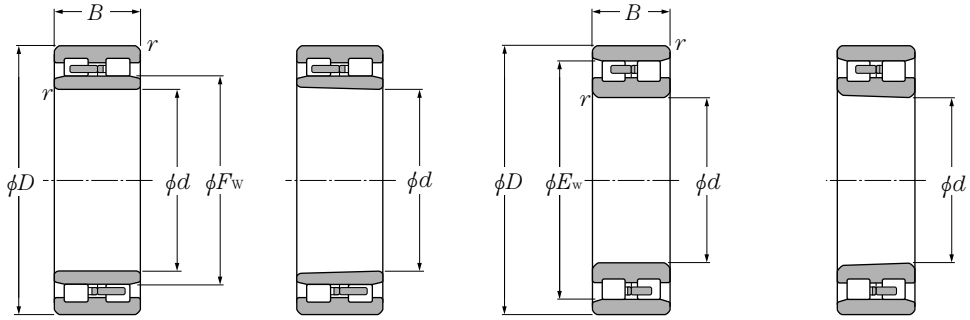

Type NNU

Cylindrical bore | **Tapered bore taper 1:12**

Type NN

Cylindrical bore | **Tapered bore taper 1:12**

d 100～180mm

Boundary dimensions mm				Basic load ratings dynamic kN	static kN	dynamic kgf	static kgf	Bearing numbers type NNU		type NN	
								Cylindrical bore	tapered bore❶	Cylindrical bore	tapered bore❶
d	*D*	*B*	$r_{s\,min}$❷	C_r	C_{or}	C_r	C_{or}				
100	140	40	1.1	131	260	13,300	26,500	NNU4920	NNU4920K	NN4920	NN4920K
	150	37	1.5	153	256	15,600	26,100	—	—	NN3020	NN3020K
105	145	40	1.1	133	268	13,500	27,400	NNU4921	NNU4921K	NN4921	NN4921K
	160	41	2	198	320	20,200	33,000	—	—	NN3021	NN3021K
110	150	30	1.1	107	206	10,900	21,000	—	—	NN3922	—
	150	40	1.1	137	284	14,000	28,900	NNU4922	NNU4922K	NN4922	NN4922K
	170	45	2	229	375	23,300	38,000	NNU3022	NNU3022K	NN3022	NN3022K
120	165	45	1.1	183	360	18,700	37,000	NNU4924	NNU4924K	NN4924	NN4924K
	180	46	2	233	390	23,700	40,000	NNU3024	—	NN3024	NN3024K
130	180	37	1.5	169	315	17,300	32,000	—	—	NN3926	NN3926K
	180	50	1.5	220	440	22,400	45,000	NNU4926	NNU4926K	NN4926	NN4926K
	200	52	2	284	475	29,000	48,500	NNU3026	—	NN3026	NN3026K
	210	64	2	340	560	35,000	57,000	—	—	NN3126	—
140	190	37	1.5	175	335	17,800	34,000	—	—	NN3928	—
	190	50	1.5	227	470	23,100	48,000	NNU4928	NNU4928K	NN4928	NN4928K
	210	53	2	298	515	30,500	52,500	NNU3028	—	NN3028	NN3028K
150	210	45	2	256	475	26,100	48,500	—	—	NN3930	—
	210	60	2	345	690	35,000	70,500	NNU4930	NNU4930K	NN4930	NN4930K
	225	56	2.1	335	585	34,000	60,000	NNU3030	—	NN3030	NN3030K
	225	75	2.1	435	825	44,500	84,000	—	—	NN4030	—
	250	80	2.1	555	900	56,500	92,000	NNU3130	—	—	—
160	220	45	2	265	505	27,000	51,500	—	—	NN3932	NN3932K
	220	60	2	355	740	36,500	75,500	NNU4932	NNU4932K	NN4932	NN4932K
	240	60	2.1	375	660	38,000	67,500	—	—	NN3032	NN3032K
170	230	45	2	268	520	27,400	53,000	—	—	NN3934	NN3934K
	230	60	2	360	765	37,000	78,000	NNU4934	NNU4934K	NN4934	NN4934K
	260	67	2.1	440	775	45,000	79,000	NNU3034	NNU3034K	NN3034	NN3034K
	280	88	2.1	635	1,050	65,000	107,000	NNU3134	—	NN3134	—
180	250	52	2	340	665	35,000	67,500	—	—	NN3936	NN3936K
	250	69	2	460	965	46,500	98,500	NNU4936	NNU4936K	NN4936	NN4936K

❶ "**K**" indicates bearings have tapered bore with a taper ratio of 1: 12. ❷ Smallest allowable dimension for chamfer dimension r.

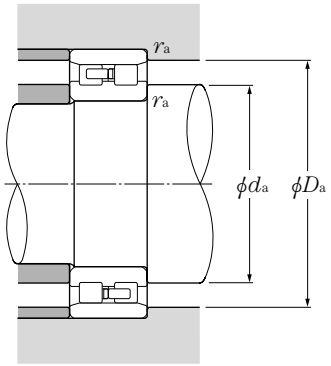

Type NN

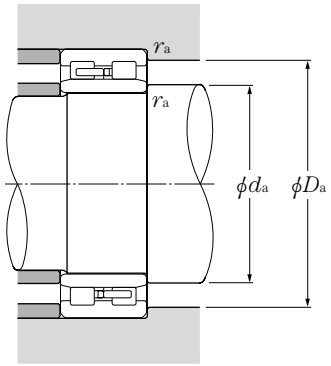

Type NNU

Equivalent bearing load
dynamic
$P_r = F_r$
static
$P_{or} = F_r$

Dimensions mm		Abutment and fillet dimensions mm			Mass (approx.) kg	
		d_a	D_a	r_{as}	type NNU	type NN
F_w	E_w	min	max	max	Cylindrical bore	Cylindrical bore
113	129	106.5	133.5	1	1.83	1.75
—	137	108	—	1.5	—	2.26
118	134	111.5	138.5	1	1.91	1.82
—	146	114	—	2	—	2.89
—	139	116.5	—	1	—	1.54
123	139	116.5	143.5	1	1.99	1.9
127	155	119	161	2	3.87	3.69
134.5	154.5	126.5	158.5	1	2.75	2.63
137	165	129	171	2	4.24	3.98
—	168	138	—	1.5	—	—
146	168	138	172	1.5	3.69	3.52
150	182	139	191	2	6.15	5.92
—	189	139	—	2	—	8.59
—	178	148	—	1.5	—	3.01
156	178	148	182	1.5	3.94	3.76
160	192	149	201	2	6.64	6.44
—	196.5	159	—	2	—	4.79
168.5	196.5	159	201	2	6.18	5.9
172	206	161	214	2	8.06	7.81
—	206	161	—	2	—	10.4
177	—	161	239	2	16.4	—
—	206.5	169	—	2	—	5.06
178.5	206.5	169	211	2	6.53	6.24
—	219	171	—	2	—	8.92
—	216.5	179	—	2	—	5.33
188.5	216.5	179	221	2	6.87	6.56
196	236	181	249	2	13.3	12.6
201	253	181	269	2	22.3	21.5
—	234	189	—	2	—	7.72
202	234	189	241	2	9.9	9.45

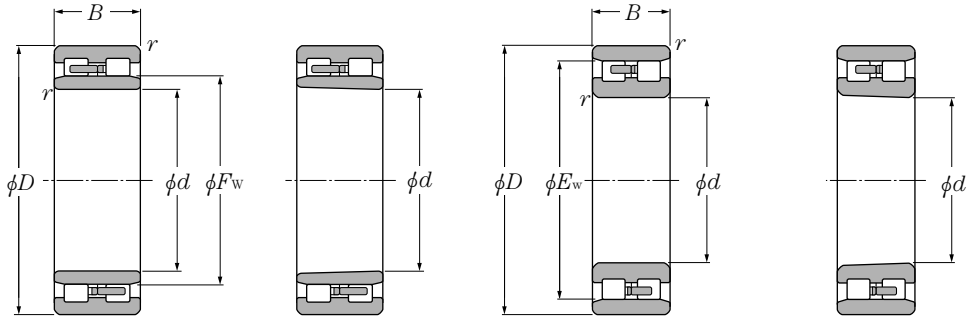

Type NNU

Cylindrical bore | **Tapered bore taper 1:12**

Type NN

Cylindrical bore | **Tapered bore taper 1:12**

d 180～320mm

Boundary dimensions mm				Basic load ratings dynamic kN	static kN	dynamic kgf	static kgf	Bearing numbers type NNU Cylindrical bore	type NNU tapered bore❶	type NN Cylindrical bore	type NN tapered bore❶
d	*D*	*B*	$r_{s\,min}$❷	C_r	C_{or}	C_r	C_{or}				
180	280	74	2.1	565	995	57,500	102,000	**NNU3036**	—	**NN3036**	**NN3036K**
190	260	52	2	355	705	36,000	72,000	—	—	**NN3938**	—
	260	69	2	475	1,030	48,500	105,000	**NNU4938**	**NNU4938K**	**NN4938**	**NN4938K**
	290	75	2.1	580	1,040	59,000	106,000	**NNU3038**	—	**NN3038**	**NN3038K**
200	280	60	2.1	445	890	45,500	91,000	—	—	**NN3940**	—
	280	80	2.1	555	1,180	56,500	120,000	**NNU4940**	**NNU4940K**	**NN4940**	**NN4940K**
	310	82	2.1	655	1,170	66,500	119,000	**NNU3040**	—	**NN3040**	**NN3040K**
	310	109	2.1	890	1,730	90,500	177,000	—	—	**NN4040**	—
	340	112	3	970	1,660	99,000	169,000	—	—	**NN3140**	—
220	300	60	2.1	470	975	48,000	99,500	—	—	**NN3944**	**NN3944K**
	300	80	2.1	585	1,300	59,500	132,000	**NNU4944**	**NNU4944K**	**NN4944**	**NN4944K**
	340	90	3	815	1,480	83,000	151,000	**NNU3044**	—	**NN3044**	**NN3044K**
	370	120	4	1,080	1,890	111,000	193,000	**NNU3144**	—	**NN3144**	—
240	320	60	2.1	490	1,060	50,000	109,000	**NNU3948**	—	**NN3948**	**NN3948K**
	320	80	2.1	610	1,410	62,500	144,000	**NNU4948**	**NNU4948K**	**NN4948**	**NN4948K**
	360	92	3	855	1,600	87,000	163,000	**NNU3048**	—	**NN3048**	**NN3048K**
	400	128	4	1,250	2,230	127,000	228,000	—	—	**NN3148**	—
260	360	75	2.1	660	1,390	67,000	141,000	—	—	**NN3952**	**NN3952K**
	360	100	2.1	900	2,070	92,000	211,000	**NNU4952**	**NNU4952K**	**NN4952**	**NN4952K**
	400	104	4	1,060	1,990	108,000	203,000	—	—	**NN3052**	**NN3052K**
	400	140	4	1,500	3,100	153,000	315,000	**NNU4052**	—	**NN4052**	—
280	350	52	2	320	765	32,500	78,000	**NNU3856**	—	—	—
	350	69	2	505	1,300	51,000	132,000	**NNU4856**	**NNU4856K**	—	—
	380	75	2.1	690	1,510	70,500	154,000	—	—	**NN3956**	**NN3956K**
	380	100	2.1	925	2,200	94,500	224,000	**NNU4956**	**NNU4956K**	**NN4956**	**NN4956K**
	420	106	4	1,080	2,080	110,000	212,000	—	—	**NN3056**	**NN3056K**
300	420	90	3	945	2,050	96,000	209,000	—	—	**NN3960**	**NN3960K**
	420	118	3	1,200	2,800	122,000	285,000	**NNU4960**	**NNU4960K**	**NN4960**	**NN4960K**
	460	118	4	1,330	2,560	135,000	261,000	**NNU3060**	—	**NN3060**	**NN3060K**
	460	160	4	1,890	4,050	193,000	410,000	—	—	**NN4060**	—
320	400	80	2.1	610	1,600	62,500	163,000	**NNU4864**	—	—	—

❶ "**K**" indicates bearings have tapered bore with a taper ratio of 1: 12. ❷ Smallest allowable dimension for chamfer dimension r.

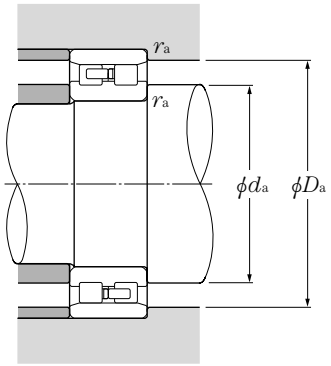

Type NN

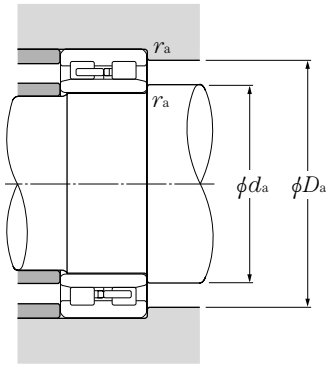

Type NNU

Equivalent bearing load
dynamic
$P_r = F_r$
static
$P_{or} = F_r$

Dimensions mm		Abutment and fillet dimensions mm			Mass (approx.) kg	
		d_a	D_a	r_{as}	type NNU	type NN
F_w	E_w	min	max	max	Cylindrical bore	Cylindrical bore
209	255	191	269	2	17.4	16.6
—	244	199	—	2	—	8.08
212	244	199	251	2	10.4	9.93
219	265	201	279	2	18.4	18
—	261	211	—	2	—	11.4
225	261	211	269	2	14.7	14
232	282	211	299	2	23.5	21.6
—	282	211	—	2	—	30.2
—	304	213	—	2.5	—	41.8
—	281	231	—	2	—	12.3
245	281	231	289	2	15.9	15.2
254	310	233	327	2.5	31.0	29.3
263.5	331.5	236	354	3	54.4	52.4
265	301	251	309	2	13.8	13.3
265	301	251	309	2	17.2	16.4
274	330	253	347	2.5	33.9	32.8
—	361	256	—	3	—	64.7
—	336	271	—	2	—	22.9
292	336	271	349	2	29.6	28.3
—	364	276	—	3	—	47.4
298	362	276	384	3	66.2	63.8
301	—	289	341	2	11.7	—
301	—	289	341	2	15.6	—
—	356	291	—	2	—	24.4
312	356	291	369	2	31.6	30.2
—	384	296	—	3	—	51.1
—	391	313	—	2.5	—	38.4
339	391	313	407	2.5	48.6	46.4
346	418	316	444	3	73.4	70.8
—	418	316	—	3	—	96
344	—	331	389	2	23.6	—

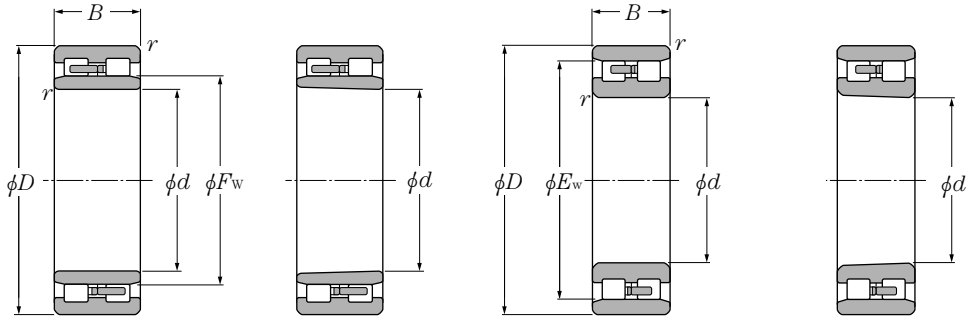

Type NNU

Cylindrical bore | **Tapered bore taper 1:12**

Type NN

Cylindrical bore | **Tapered bore taper 1:12**

d 320～500mm

Boundary dimensions mm				Basic load ratings dynamic kN	static kN	dynamic kgf	static kgf	Bearing numbers type NNU		type NN	
								Cylindrical bore	tapered bore❶	Cylindrical bore	tapered bore❶
d	*D*	*B*	$r_{s\,min}$❷	C_r	C_{or}	C_r	C_{or}				
320	440	90	3	975	2,180	99,000	222,000	—	—	NN3964	NN3964K
	440	118	3	1,240	2,970	126,000	305,000	NNU4964	NNU4964K	NN4964	NN4964K
	480	121	4	1,350	2,670	138,000	272,000	NNU3064	—	NN3064	NN3064K
	540	176	5	2,160	3,950	220,000	400,000	NNU3164	—	—	—
340	460	118	3	1,280	3,150	131,000	320,000	NNU4968	NNU4968K	NN4968	NN4968K
	520	133	5	1,620	3,200	165,000	325,000	NNU3068	—	NN3068	NN3068K
360	480	90	3	1,030	2,430	105,000	248,000	—	—	NN3972	—
	480	118	3	1,290	3,250	131,000	330,000	NNU4972	NNU4972K	—	—
	540	134	5	1,650	3,300	169,000	340,000	NNU3072	—	NN3072	NN3072K
	540	180	5	2,470	5,550	252,000	570,000	NNU4072	—	—	—
380	520	140	4	1,630	4,050	167,000	415,000	NNU4976	NNU4976K	—	—
	560	135	5	1,690	3,450	172,000	355,000	NNU3076	—	NN3076	NN3076K
400	500	100	2.1	1,070	2,950	109,000	300,000	NNU4880	—	—	—
	540	140	4	1,690	4,300	172,000	435,000	NNU4980	NNU4980K	—	—
	600	148	5	2,040	4,150	208,000	420,000	—	—	NN3080	NN3080K
420	560	106	4	1,370	3,350	140,000	340,000	—	—	NN3984	—
	560	140	4	1,740	4,500	177,000	460,000	NNU4984	NNU4984K	—	—
	620	150	5	2,080	4,300	212,000	440,000	—	—	NN3084	NN3084K
	700	224	6	3,400	6,400	345,000	650,000	NNU3184	—	—	—
440	600	160	4	2,150	5,550	219,000	565,000	NNU4988	NNU4988K	—	—
	650	157	6	2,420	5,100	247,000	520,000	NNU3088	—	NN3088	NN3088K
	650	212	6	3,250	7,750	330,000	790,000	NNU4088	—	—	—
460	620	160	4	2,220	5,850	226,000	595,000	NNU4992	NNU4992K	—	—
	680	163	6	2,550	5,350	260,000	545,000	—	—	NN3092	NN3092K
480	600	90	3	1,010	2,570	103,000	262,000	—	—	NN3896	—
	650	170	5	2,280	5,900	233,000	600,000	NNU4996	NNU4996K	—	—
	790	248	7.5	4,100	8,100	420,000	825,000	—	—	NN3196	—
500	620	90	3	1,140	2,880	116,000	293,000	NNU38/500	—	—	—
	670	170	5	2,360	6,200	240,000	635,000	NNU49/500	NNU49/500K	—	—
	720	167	6	2,650	5,750	270,000	590,000	—	—	NN30/500	—

❶ "**K**" indicates bearings have tapered bore with a taper ratio of 1: 12. ❷ Smallest allowable dimension for chamfer dimension r.

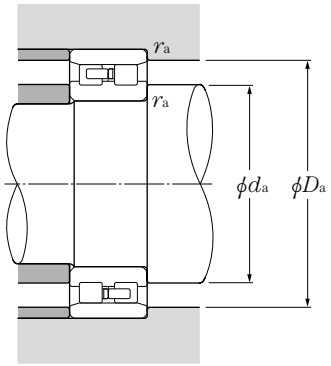

Type NN

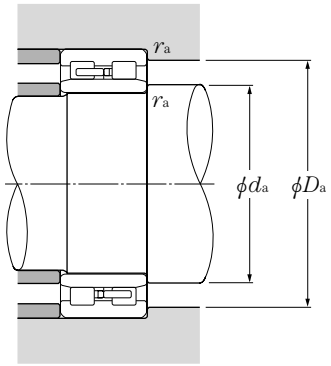

Type NNU

Equivalent bearing load
dynamic
$P_r = F_r$
static
$P_{or} = F_r$

Dimensions mm		Abutment and fillet dimensions mm			Mass (approx.) kg	
		d_a	D_a	r_{as}	type NNU	type NN
F_w	E_w	min	max	max	Cylindrical bore	Cylindrical bore
—	411	333	—	2.5	—	40.5
359	411	333	427	2.5	51.4	49
366	438	336	464	3	79.3	76.2
383	—	340	520	4	170	—
379	431	353	447	2.5	54.2	52.2
393	473	360	500	4	105	102
—	451	373	—	2.5	—	44.8
398	—	373	467	2.5	57	—
413	493	380	520	4	111	107
415	—	380	520	4	136	—
425	—	396	504	3	84.5	—
432	512	400	540	4	117	113
430.5	—	411	489	2	46.1	—
445	—	416	524	3	88.2	—
—	547	420	—	4	—	146
—	522	436	—	3	—	71.7
465	—	436	544	3	92	—
—	567	440	—	4	—	154
500	—	444	676	5	359	—
492	—	456	584	3	127	—
500	596	464	626	5	184	178
505	—	464	626	5	248	—
512	—	476	604	3	132	—
—	622	484	—	5	—	202
—	566	493	—	2.5	—	57.5
534	—	500	630	4	156	—
—	710	512	—	6	—	482
532	—	513	607	2.5	61.9	—
556	—	520	650	4	162	—
—	664	524	—	5	—	221

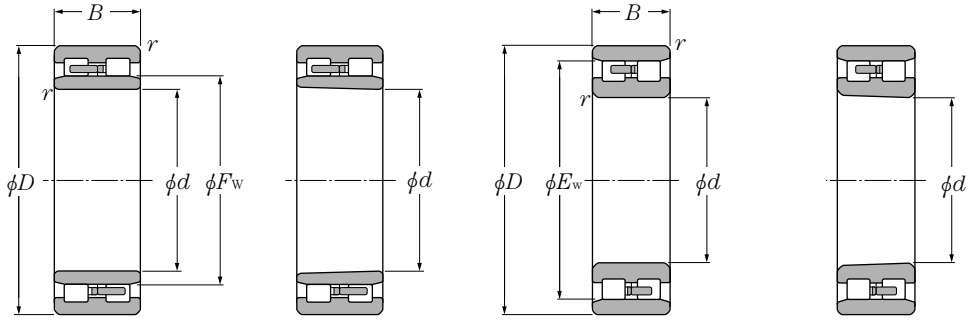

Type NNU

Cylindrical bore | **Tapered bore taper 1:12**

Type NN

Cylindrical bore | **Tapered bore taper 1:12**

d 530～950mm

Boundary dimensions mm				Basic load ratings dynamic kN	static kN	dynamic kgf	static kgf	Bearing numbers type NNU		type NN	
								Cylindrical bore	tapered bore❶	Cylindrical bore	tapered bore❶
d	D	B	$r_{s\,min}$❷	C_r	C_{or}	C_r	C_{or}				
530	650	90	3	1,060	2,840	108,000	289,000	—	—	NN38/530	—
	710	180	5	2,740	7,150	279,000	730,000	NNU49/530	NNU49/530K	—	—
560	680	90	3	1,060	2,960	108,000	300,000	—	—	NN38/560	—
	750	190	5	3,150	8,450	325,000	860,000	NNU49/560	NNU49/560K	NN49/560	—
	820	195	6	3,550	7,700	365,000	785,000	NNU30/560	—	—	—
600	730	128	3	1,840	5,400	188,000	550,000	NNU48/600	—	—	—
	870	200	6	3,700	8,250	375,000	845,000	—	—	NN30/600	—
630	780	150	4	2,200	6,200	224,000	630,000	NNU48/630	—	—	—
	850	165	6	5,750	5,300	585,000	1,560,000	NNU39/630	—	—	—
750	920	128	5	2,340	6,450	238,000	660,000	NNU38/750	—	—	—
	1,000	250	6	4,850	3,200	495,000	1,340,000	NNU49/750	—	—	—
800	980	136	5	2,430	6,700	248,000	680,000	NNU38/800	—	—	—
	1,060	195	6	3,900	10,200	400,000	1,040,000	NNU39/800	—	—	—
950	1,250	300	7.5	7,150	1,200	730,000	2,160,000	—	—	NN49/950	—

❶ "**K**" indicates bearings have tapered bore with a taper ratio of 1: 12. ❷ Smallest allowable dimension for chamfer dimension r.

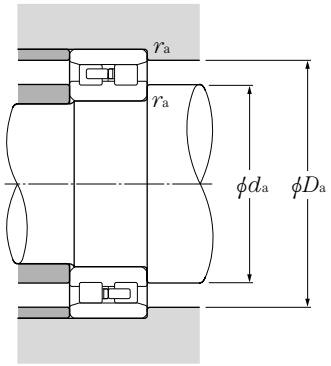

Type NN

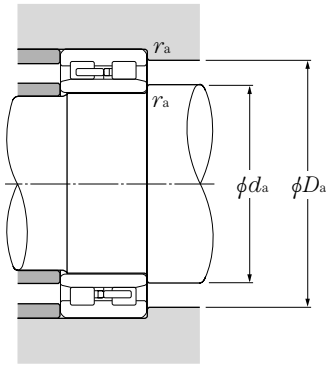

Type NNU

Equivalent bearing load
dynamic
$P_r = F_r$
static
$P_{or} = F_r$

Dimensions mm		Abutment and fillet dimensions mm			Mass (approx.) kg	
		d_a	D_a	r_{as}	type NNU	type NN
F_w	E_w	min	max	max	Cylindrical bore	Cylindrical bore
—	616	543	—	2.5	—	62.9
588	—	550	690	4	206	—
—	647	573	—	2.5	—	66.1
618	702	580	730	4	242	233
634	—	584	796	5	358	—
635	—	613	717	2.5	113	—
—	800	624	—	5	—	392
673	—	646	764	3	162	—
684	—	654	826	5	275	—
798	—	770	900	4	186	—
824	—	774	976	5	560	—
852	—	820	960	4	223	—
878	—	824	1,036	5	483	—
—	1,176	982	—	6	—	977

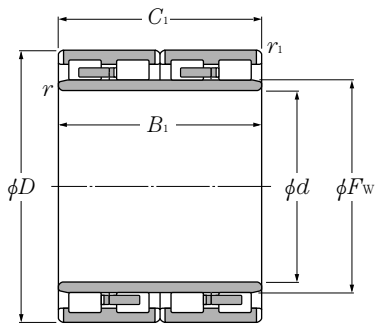

d 100～170mm

Boundary dimensions mm						Basic load ratings dynamic kN		static kgf		Bearing❶ numbers	Drawing❷ No.
d	D	B_1	C_1	$r_{s\,min}$❸	$r_{ls\,min}$❸	C_r	C_{or}	C_r	C_{or}		
100	150	74	74	2	2	262	510	26,700	52,500	**4R2035**	A
120	180	92	92	2.5	2.5	400	785	40,500	80,000	**4R2437**	A
	180	105	105	2.5	2.5	445	855	45,500	87,000	**4R2438**	A
130	200	104	104	2.5	2.5	490	955	49,500	97,000	**4R2628**	A
140	190	119	119	1.5	1.5	495	1,190	50,500	121,000	**4R2832**	B[2)]
	210	116	116	2.5	2.5	510	1,030	52,000	105,000	**4R2823**	A
145	210	155	155	2.5	2.5	705	1,640	71,500	168,000	**4R2906**	A
	225	156	156	2.5	2.5	810	1,750	82,500	178,000	**4R2904**	A
150	220	127	120	2.5	2.5	615	1,280	63,000	130,000	**4R3036**	A
	220	150	150	2.5	2.5	750	1,640	76,500	168,000	**4R3031**	A
	220	150	150	2.5	2.5	750	1,640	76,500	168,000	**4R3056**	A
	230	130	130	2.5	2.5	725	1,520	73,500	155,000	**4R3029**	A
	230	156	156	2.5	2.5	930	2,040	95,000	208,000	**4R3040**	A
	230	168	168	2	2	845	1,950	86,000	199,000	**4R3042**	A
	250	150	150	2.5	2.5	885	1,640	90,500	167,000	**4R3039**	A
151.5	230	168	168	1.5	2.5	850	2,060	87,000	210,000	**4R3033K**	A
160	220	180	180	2.5	2.5	920	2,490	93,500	254,000	**4R3224**	D[3)]
	230	130	130	2.5	2.5	665	1,340	68,000	136,000	**4R3226**	A
	230	168	168	2.5	2.5	915	2,170	93,500	222,000	**4R3232**	A
	230	168	168	2.5	2.5	895	2,200	91,500	225,000	**4R3229**	A
	230	168	168	2.5	2.5	895	2,210	91,000	225,000	**4R3231**	A
	230	180	180	2.5	2.5	920	2,490	93,500	254,000	**4R3228**	D[3)]
	240	170	170	2	2.5	980	2,290	100,000	234,000	**4R3225**	A
170	230	120	120	2.5	2.5	620	1,520	63,000	155,000	**4R3426**	A
	230	120	120	2	2	620	1,520	63,000	155,000	**4R3443**	C
	240	156	156	2.5	2.5	905	2,170	92,500	222,000	**4R3429**	A
	240	160	160	2.5	2.5	905	2,180	92,000	222,000	**4R3423**	A
	250	168	168	2.5	2.5	970	2,220	99,000	226,000	**4R3432**	A
	250	168	168	2.5	2.5	1,030	2,390	105,000	243,000	**4R3428**	A
	255	180	180	2.5	2.5	1,100	2,430	112,000	247,000	**4R3425**	A
	260	150	150	2.5	2.5	835	1,750	85,000	179,000	**4R3433**	A

❶ "**K**" indicates bearings have tapered bore with a taper ratio of 1: 12. ❷ Drawing details are shown in Page B-38.
❸ Minimal allowable dimension for chamfer dimension r or r_1.

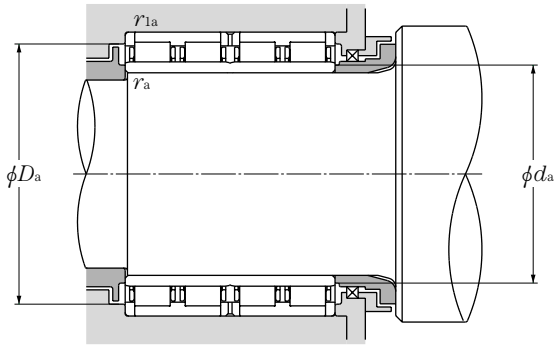

Abutment and fillet dimensions					Mass
	mm				kg
F_w	d_a min	D_a max	r_{as} max	r_{las} max	(approx.)
115	109	141	2.0	2.0	4.68
137	131	169	2	2	8.2
135	131	169	2	2	9.3
150	141	189	2	2	12.1
154	148	182	1.5	1.5	9.93
160	151	199	2	2	13.9
166	156	199	2	2	18
169	156	214	2	2	23.3
168	161	209	2	2	15.7
168	161	209	2	2	19.4
168	161	209	2	2	19.6
174	161	219	2	2	20
174	161	219	2	2	24.5
178	159	221	2	2	25.8
177	161	239	2	2	29.6
179	159.5	219	1.5	2	25.4
177	171	209	2	2	20.2
180	171	219	2	2	16.6
179	171	219	2	2	23.4
180	171	219	2	2	23.2
182	171	219	2	2	23.2
177	171	219	2	2	24.8
183	169	229	2	2	27.8
187	181	219	2	2	14.2
187	179	221	2	2	14.6
189	181	229	2	2	22.2
190	181	229	2	2	22.8
193	181	239	2	2	28.2
193	181	239	2	2	28.5
193	181	244	2	2	19.3
192	181	249	2	2	29.5

4-Row Cylindrical Roller Bearings

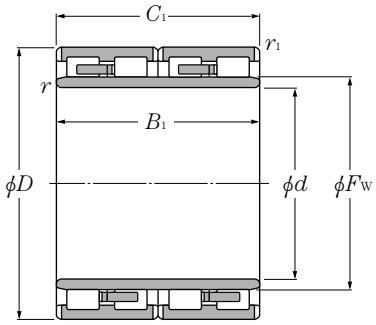

d 170～230mm

Boundary dimensions mm						Basic load ratings dynamic kN		static kgf		Bearing❶ numbers	Drawing❷ No.
d	D	B_1	C_1	$r_{s\,min}$❸	$r_{ls\,min}$❸	C_r	C_{or}	C_r	C_{or}		
170	260	225	225	2.5	2.5	1,310	3,150	134,000	320,000	**4R3431**	A
180	250	156	156	2.5	2.5	895	2,180	91,500	223,000	**4R3625**	A
	250	168	168	2	2	885	2,470	90,000	252,000	**4R3639**	A
	260	168	168	2.5	2.5	1,020	2,400	104,000	244,000	**4R3628**	A
	265	180	180	2.5	2.5	1,090	2,510	111,000	256,000	**4R3618**	A
190	260	168	168	2.5	2.5	980	2,600	100,000	265,000	**4R3820**	A
	270	170	170	2.5	2.5	1,090	2,660	111,000	272,000	**4R3818**	A
	270	200	200	2.5	2.5	1,260	3,100	128,000	315,000	**4R3821**	A
	270	200	200	2.5	2.5	1,230	3,200	125,000	330,000	**4R3817**	A
	280	200	200	2.5	2.5	1,240	2,910	126,000	297,000	**4R3823**	B
	280	200	200	2.5	2.5	1,240	2,910	126,000	297,000	**4R3830**	C
200	270	170	170	2.5	2.5	970	2,610	99,000	266,000	**4R4039**	A
	280	152	152	2.1	2.1	1,000	2,320	102,000	237,000	**4R4054**	B2)
	280	170	170	2.5	2.5	1,040	2,430	106,000	248,000	**4R4048**	A
	280	190	190	2.5	2.5	1,190	3,150	121,000	320,000	**4R4026**	A
	280	200	200	2.5	2.5	1,310	3,300	134,000	335,000	**4R4037**	A
	280	200	200	2.5	2.5	1,250	3,350	127,000	340,000	**4R4027**	A
	290	192	192	2.5	2.5	1,290	3,150	132,000	320,000	**4R4041**	A
210	290	192	192	2.5	2.5	1,230	3,350	126,000	340,000	**4R4206**	A
220	290	192	192	2.5	2.5	1,190	3,350	122,000	340,000	**4R4413**	A
	300	160	160	2.5	2.5	1,000	2,590	102,000	264,000	**4R4419**	A
	300	160	160	2.1	2.1	1,000	2,590	102,000	264,000	**4R4445**	C
	310	192	192	2.5	2.5	1,350	3,550	138,000	360,000	**4R4410**	A
	310	192	192	2.5	2.5	1,390	3,400	141,000	350,000	**4R4426**	A
	310	204	204	2.5	2.5	1,420	3,750	144,000	385,000	**4R4425**	A
	310	215	215	2.5	2.5	1,530	3,750	156,000	380,000	**4R4420**	A
	310	225	225	2.5	2.5	1,480	3,950	151,000	405,000	**4R4416**	A
	310	225	225	2.5	2.5	1,590	3,950	162,000	400,000	**4R4449**	A
	320	160	160	3	3	1,190	2,550	121,000	260,000	**4R4428**	A
	320	210	210	2.5	2.5	1,550	3,650	158,000	370,000	**4R4429**	A
	320	210	210	2.5	2.5	1,560	3,600	159,000	370,000	**4R4444**	A
230	330	206	206	2.5	2.5	1,510	3,900	154,000	395,000	**4R4610**	A
	330	206	206	2.5	2.5	1,520	3,800	155,000	385,000	**4R4614**	A

❶ Drawing details are shown in Page B-38.
❷ Minimal allowable dimension for chamfer dimension r or r_1.

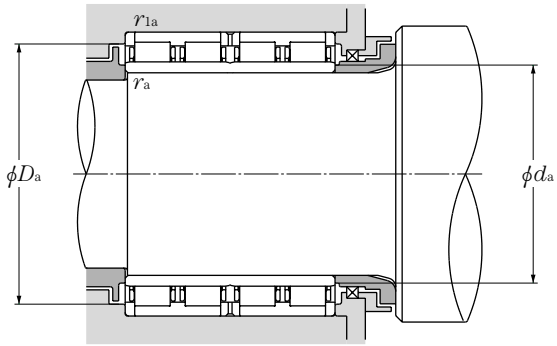

Abutment and fillet dimensions					Mass
	mm				kg
F_w	d_a min	D_a max	r_{as} max	r_{las} max	(approx.)
196	181	249	2	2	44
200	191	239	2	2	23.2
202	189	241	2	2	25.6
202	191	249	2	2	29.4
204	191	254	2	2	34.2
212	201	249	2	2	26.9
213	201	259	2	2	31.7
212	201	259	2	2	37.5
212	201	259	2	2	37.2
214	201	269	2	2	41.5
214	201	269	2	2	42.8
222	211	259	2	2	28.5
222	211	269	2	2	29.5
222	211	269	2	2	33
223	211	269	2	2	36.7
222	211	269	2	2	40.5
224	211	269	2	2	38.8
226	211	279	2	2	42.5
236	221	279	2	2	39.5
239	231	279	2	2	33.8
245	231	289	2	2	32.8
245	231	289	2	2	33.7
247	231	299	2	2	46.3
246	231	299	2	2	46.9
247	231	299	2	2	49.8
242	231	299	2	2	51.5
245	231	299	2	2	54.9
244	231	299	2	2	54.3
245	233	307	2.5	2.5	46.5
248	231	309	2	2	60.5
246	231	309	2	2	57.3
260	241	319	2	2	58.3
258	241	319	2	2	58.6

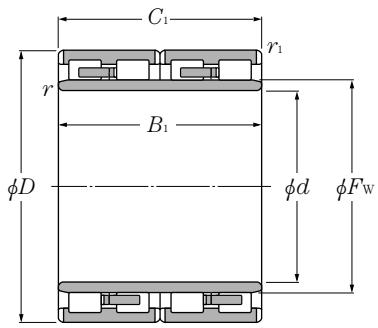

d 230～300mm

Boundary dimensions mm						Basic load ratings dynamic kN		dynamic kgf	static	Bearing numbers	Drawing❶ No.
d	D	B_1	C_1	$r_{s\,min}$❷	$r_{ls\,min}$❷	C_r	C_{or}	C_r	C_{or}		
230	340	260	260	3	3	2,050	5,100	209,000	520,000	**4R4611**	A
240	330	220	220	3	3	1,490	4,150	152,000	420,000	**4R4811**	C
	330	220	220	3	3	1,610	4,250	164,000	435,000	**4R4819**	A
	330	220	220	3	3	1,490	4,150	152,000	420,000	**4R4821**	C
	330	220	220	3	3	1,520	4,250	155,000	435,000	**4R4804**	A
	340	220	220	3	3	1,670	4,200	170,000	425,000	**4R4806**	A
	360	220	220	2.5	2.5	1,760	4,050	179,000	415,000	**4R4807**	A
	360	220	220	2.5	2.5	1,760	4,050	179,000	415,000	**4R4813**	A
250	350	220	220	3	3	1,730	4,300	176,000	440,000	**4R5008**	A
260	360	220	200	2.5	2.5	1,540	4,150	157,000	426,000	**4R5221**	D
	360	260	260	2.5	2.1	1,830	4,850	187,000	495,000	**4R5231**	C[1)]
	370	220	220	3	3	1,760	4,450	179,000	455,000	**4R5208**	A
	370	220	220	3	3	1,760	4,450	179,000	455,000	**4R5217**	A[1)]
	380	280	280	3	3	2,420	6,250	247,000	635,000	**4R5213**	A
	400	290	290	4	2	3,050	7,150	315,000	730,000	**4R5218**	E[4)]
265	370	234	234	1.5	1.5	2,020	5,000	206,000	510,000	**4R5306**	A[1)]
270	380	280	280	2.5	2.5	2,260	5,750	231,000	585,000	**4R5407**	A
	380	280	280	2.5	2.5	2,580	6,850	263,000	700,000	**4R5405**	F[4)]
280	350	208	208	2.5	2.5	1,290	3,950	132,000	405,000	**4R5614**	A
	390	220	220	3	3	1,780	4,650	181,000	475,000	**4R5611**	A
	390	220	220	3	3	1,820	4,800	186,000	490,000	**4R5604**	A
	390	275	275	2.5	2.5	2,290	6,250	233,000	635,000	**4R5612**	D[3)]
	420	280	280	4	4	2,430	6,150	248,000	630,000	**4R5605**	A
290	410	240	240	3	3	2,240	5,550	228,000	565,000	**4R5806**	A
	420	300	300	3	3	2,830	7,500	288,000	765,000	**4R5805**	A
300	400	300	300	3	3	2,480	7,500	253,000	765,000	**4R6014**	A
	420	240	240	3	3	2,020	5,450	206,000	555,000	**4R6017**	A[1)]
	420	240	240	3	3	2,020	5,450	206,000	555,000	**4R6012**	A
	420	240	240	3	3	2,010	5,450	205,000	555,000	**4R6023**	A[1)]
	420	240	240	3	3	2,280	5,750	233,000	585,000	**4R6027**	A
	420	300	300	3	3	2,990	8,150	305,000	835,000	**4R6030**	F[1)]

❶ Drawing details are shown in Page B-38.
❷ Minimal allowable dimension for chamfer dimension r or r_1.

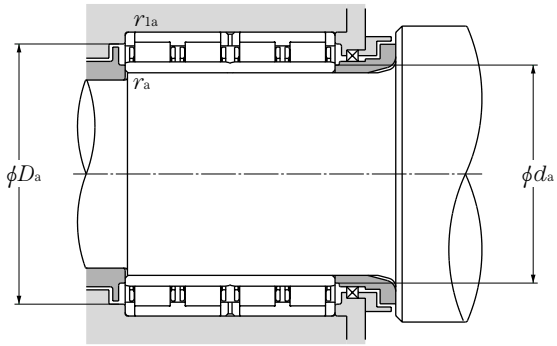

Abutment and fillet dimensions					Mass
	mm				kg
F_w	d_a min	D_a max	r_{as} max	r_{las} max	(approx.)
261	243	327	2.5	2.5	82.6
270	253	317	2.5	2.5	56.8
264	253	317	2.5	2.5	57.1
268	253	317	2.5	2.5	57.1
270	253	317	2.5	2.5	57.1
268	253	327	2.5	2.5	63.6
274	251	349	2	2	79.6
274	251	349	2	2	80.1
278	263	337	2.5	2.5	66
292	271	349	2	2	62.7
287	271	349	2	2	81.5
292	273	357	2.5	2.5	77.1
292	273	357	2.5	2.5	76.5
294	273	367	2.5	2.5	109
296	276	391	3	2	135
300	273	362	1.5	1.5	78.9
297	281	369	2	2	101
299.7	281	369	2	2	105
298	291	339	2	2	46.4
312	293	377	2.5	2.5	81.3
312	293	377	2.5	2.5	82
312	291	379	2	2	105
323	296	404	3	3	139
320	303	397	2.5	2.5	103
327	303	407	2.5	2.5	141
328	313	387	2.5	2.5	104
334	313	407	2.5	2.5	106
334	313	407	2.5	2.5	105
336	313	407	2.5	2.5	105
332	313	407	2.5	2.5	105
331	313	407	2.5	2.5	136

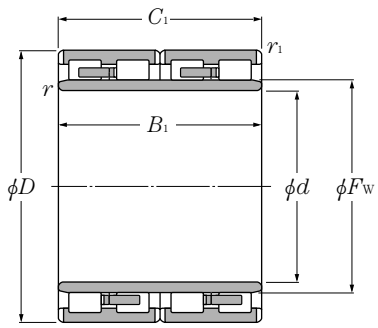

d 300～380mm

Boundary dimensions mm						Basic load ratings dynamic kN		static kN		Bearing numbers [1]	Drawing No. [2]
d	D	B_1	C_1	$r_{s\,min}$ [3]	$r_{ls\,min}$ [3]	C_r	C_{or}	C_r	C_{or}		
300	420	300	300	3	3	2,720	7,600	278,000	775,000	**4R6015**	A
	420	300	300	3	3	2,900	7,850	295,000	800,000	**4R6020**	F[1)]
	420	320	300	3	3	2,900	7,850	295,000	800,000	**4R6018**	F[2)]
	430	240	240	3	3	2,160	5,150	220,000	525,000	**4R6021**	A
	460	270	270	3	3	2,510	5,350	256,000	545,000	**4R6019**	A
310	430	240	240	3	3	2,240	5,950	228,000	605,000	**4R6202**	A
320	440	240	230	3	3	2,290	6,050	234,000	615,000	**4R6414**	A
	450	240	240	3	3	2,370	6,150	242,000	630,000	**4R6411**	A
	460	340	340	3	3	3,400	9,450	345,000	960,000	**4R6412**	A
	470	350	350	3	3	4,150	10,900	425,000	1,110,000	**4R6406**	F[4)]
330	440	200	200	3	3	1,820	4,850	186,000	495,000	**4R6603**	B
	440	200	200	5	3	1,720	4,550	176,000	465,000	**4R6608**	B[1)]
	460	340	340	4	4	3,250	8,850	330,000	905,000	**4R6605**	A
	460	340	340	4	4	3,300	9,550	335,000	975,000	**4R6602**	A
340	480	350	350	4	4	3,950	10,900	400,000	1,110,000	**4R6819**	FM[1)]
	480	370	350	5	5	3,450	9,650	350,000	985,000	**4R6811**	A
	490	300	300	4	4	3,350	8,300	340,000	845,000	**4R6804**	A
	490	300	300	5	5	3,100	7,950	315,000	810,000	**4R6805**	A
356.76	550	400	400	4	4	5,100	13,800	520,000	1,410,000	**4R7105K**	E
360	480	290	290	3	3	2,990	8,150	305,000	830,000	**4R7207**	A
	510	370	370	4	4	3,550	9,700	365,000	990,000	**4R7212**	C
	510	400	380	4	2	4,350	11,900	445,000	1,210,000	**4R7205**	E[1)]
	510	400	400	5	5	4,250	11,500	435,000	1,170,000	**4R7203**	B
370	480	230	230	5	5	2,100	6,250	214,000	635,000	**4R7405**	A
	480	250	250	3	3	2,200	6,450	225,000	660,000	**4R7408**	A
	520	380	380	5	5	3,900	10,800	400,000	1,100,000	**4R7411**	A
	520	400	400	5	5	4,650	13,500	475,000	1,370,000	**4R7404**	A
380	520	280	280	4	4	3,400	9,150	350,000	935,000	**4R7605**	A
	520	290	290	4	4	3,400	9,150	350,000	935,000	**4R7617**	A
	520	300	300	4	4	3,550	9,600	360,000	980,000	**4R7607**	G[1)]
	540	400	400	4	4	5,200	15,200	530,000	1,550,000	**4R7604**	G[2)]

[1] "**K**" indicates bearings have tapered bore with a taper ratio of 1: 12. [2] Drawing details are shown in Page B-38.
[3] Minimal allowable dimension for chamfer dimension r or r_1.

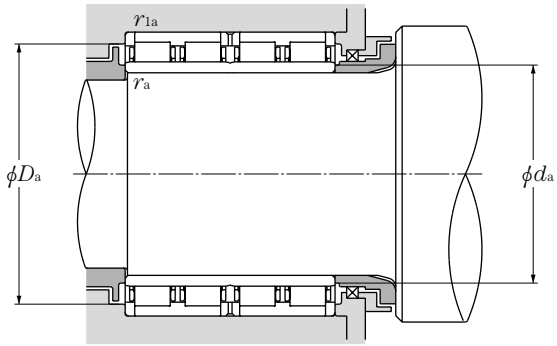

Abutment and fillet dimensions					Mass
	mm				kg
F_w	d_a min	D_a max	r_{as} max	r_{las} max	(approx.)
334	313	407	2.5	2.5	125
332	313	407	2.5	2.5	130
332	313	407	2.5	2.5	136
338	313	417	2.5	2.5	115
344	313	447	2.5	2.5	162
344.5	323	417	2.5	2.5	108
351	333	427	2.5	2.5	106
358	333	437	2.5	2.5	125
360	333	447	2.5	2.5	178
361.7	333	457	2.5	2.5	212
360	343	427	2.5	2.5	83.6
360	350	427	4	2.5	85.6
365	346	444	3	3	181
368	346	444	3	3	177
378	356	464	3	3	211
378	360	460	4	4	198
377	356	474	3	3	187
380	360	470	4	4	189
426	372.757	534	3	3	354
388	373	467	2.5	2.5	148
400	376	494	3	3	244
399	376	509	3	2	251
397	380	490	4	4	262
400	390	460	4	4	106
401	383	467	2.5	2.5	118
409	390	500	4	4	256
409	390	500	4	4	273
417	396	504	3	3	174
417	396	504	3	3	185
416	396	504	3	3	210
422	396	524	3	3	325

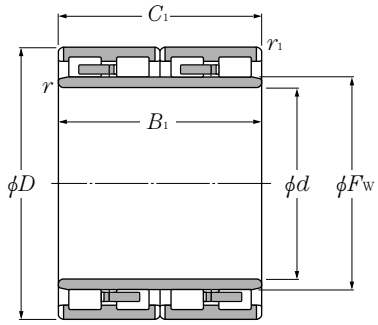

d 380～500mm

Boundary dimensions mm						Basic load ratings dynamic kN		dynamic kgf	static	Bearing numbers	Drawing❶ No.
d	D	B_1	C_1	$r_{s\,min}$❷	$r_{ls\,min}$❷	C_r	C_{or}	C_r	C_{or}		
380	540	400	400	4	4	4,950	14,400	505,000	1,470,000	4R7618	FM[1]
	540	400	400	5	5	4,550	12,700	465,000	1,300,000	4R7613	B[1) 3]
400	560	400	400	5	5	4,250	11,800	430,000	1,210,000	4R8007	B
	560	410	410	4	4	5,750	17,000	585,000	1,730,000	4R8010	F
	590	420	420	4	4	5,150	13,000	525,000	1,330,000	4R8011	A
420	560	280	280	4	4	3,150	8,750	320,000	895,000	4R8403	A
	580	230	230	4	4	2,430	6,250	248,000	635,000	4R8404	A
	600	440	440	6	2.5	6,350	18,100	650,000	1,850,000	4R8407	F[1]
	620	400	400	5	5	5,000	13,400	510,000	1,360,000	4R8401	D[3]
430	591	420	420	5	5	5,500	17,400	560,000	1,770,000	4R8605	FM[1) 4]
440	600	450	450	1.5	5	6,000	17,900	615,000	1,820,000	4R8806	FR[2]
	600	450	450	1.5	5	6,350	19,100	645,000	1,950,000	4R8805	FR[1]
	620	450	450	5	5	6,450	18,700	660,000	1,910,000	4R8803	F[1]
	620	450	450	5	5	6,450	18,700	660,000	1,910,000	4R8801	F
460	620	400	400	4	4	5,350	16,700	545,000	1,700,000	4R9211	GS
	620	400	400	4	4	4,950	15,000	505,000	1,530,000	4R9209	A
	620	460	460	4	4	5,950	19,100	605,000	1,950,000	4R9223	FM[1]
	650	470	470	5	5	7,150	20,600	730,000	2,100,000	4R9216	F[1]
470	660	470	470	5	5	7,300	21,300	745,000	2,170,000	4R9403	FM[1]
480	600	236	236	3	3	2,620	7,850	267,000	805,000	4R9610	A
	650	420	420	5	5	5,700	17,200	585,000	1,750,000	4R9613	G[1]
	650	420	420	5	5	5,950	18,100	605,000	1,840,000	4R9607	G
	680	500	500	6	6	7,950	24,000	810,000	2,450,000	4R9604	F
500	680	420	405	5	5	7,100	22,900	725,000	2,340,000	4R10010	F[2]
	680	420	405	5	5	6,300	18,800	640,000	1,920,000	4R10020	F[2]
	690	470	470	5	5	7,650	22,500	780,000	2,290,000	4R10016	F[1]
	690	510	510	5	5	7,750	24,600	790,000	2,500,000	4R10006	F
	700	515	515	5	5	7,900	24,100	805,000	2,450,000	4R10011	F
	710	480	480	6	6	8,650	24,700	880,000	2,520,000	4R10008	F[1]
	720	530	530	5	5	8,250	25,000	840,000	2,550,000	4R10015	F[1]
	720	530	530	5	5	8,250	25,000	840,000	2,550,000	4R10024	FM[1]

❶ Drawing details are shown in Page B-38.
❷ Minimal allowable dimension for chamfer dimension r or r_1.

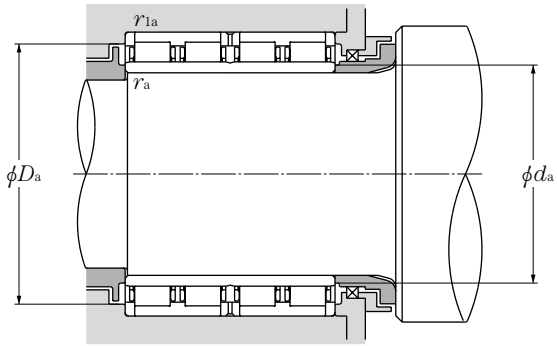

Abutment and fillet dimensions					Mass
	mm				kg
F_w	d_a min	D_a max	r_{as} max	r_{las} max	(approx.)
422	396	524	3	3	309
424	400	520	4	4	298
446	420	540	4	4	303
445	416	544	3	3	349
450	416	574	3	3	399
457	436	544	3	3	189
466	436	564	3	3	181
469.6	444	589	5	2	423
478	440	600	4	4	410
476	450	571	4	4	362
480	448	580	1.5	4	392
480	448	580	1.5	4	392
487	460	600	4	4	450
487	460	600	4	4	437
502	476	604	3	3	383
502	476	604	3	3	341
502	476	604	3	3	417
509	480	630	4	4	540
517	490	640	4	4	529
510	493	587	2.5	2.5	155
523	500	630	4	4	423
523	500	630	4	4	369
532	504	656	5	5	640
550	520	660	4	4	495
550	520	660	4	4	451
547	520	670	4	4	590
552	520	670	4	4	640
554	520	680	4	4	680
556	524	686	5	5	675
568	520	700	4	4	780
568	520	700	4	4	745

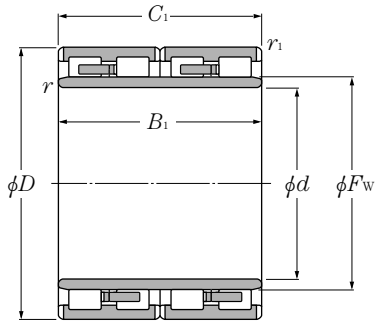

d 510～680mm

Boundary dimensions mm						Basic load ratings dynamic kN		static kN		Bearing numbers	Drawing❶ No.
d	D	B_1	C_1	$r_{s\,min}$❷	$r_{ls\,min}$❷	C_r	C_{or}	C_r	C_{or}		
510	670	320	320	5	5	4,550	13,500	465,000	1,380,000	4R10201	G[1]
	700	540	540	6	6	8,300	25,000	845,000	2,550,000	4R10202	F[1]
520	700	540	540	6	6	8,200	25,500	835,000	2,600,000	4R10403	F[1]
	720	550	550	5	5	9,400	27,700	960,000	2,820,000	4R10406	FR[1]
	735	535	535	5	5	9,000	26,600	915,000	2,710,000	4R10402	F[2]
530	700	540	540	6	6	7,850	25,400	800,000	2,590,000	4R10603	F[1]
	760	520	520	6	6	9,150	26,700	935,000	2,730,000	4R10601	F[1]
	780	570	570	6	6	10,300	29,100	1,050,000	2,970,000	4R10602	F[1]
	780	570	570	7.5	6	10,300	29,100	1,050,000	2,970,000	4R10606	FM[1]
536.18	762.03	558.8	558.8	5	6	10,100	29,200	1,030,000	2,980,000	4R10704	F[2]
550	800	520	520	6	6	9,450	27,000	965,000	2,750,000	4R11001	F[1]
560	680	360	360	3	3	4,650	16,500	475,000	1,680,000	4R11202	A
570	800	514	514	2.5	6	10,200	29,200	1,040,000	2,970,000	4R11404	FR[1]
	815	594	594	6	6	11,800	34,500	1,200,000	3,500,000	4R11402	F
600	820	575	575	7.5	7.5	10,000	31,500	1,020,000	3,200,000	4R12006	FM[1]
	870	540	540	7.5	7.5	10,600	29,600	1,090,000	3,000,000	4R12002	F[1]
	870	640	640	7.5	7.5	13,600	40,500	1,390,000	4,150,000	4R12001	F
610	870	660	660	9.5	7.5	12,600	40,000	1,280,000	4,100,000	4R12202	F[1] [4]
628	922	600	600	3	6	13,600	38,500	1,390,000	3,900,000	4R12602	F[1]
640	880	600	600	6	6	11,500	36,000	1,170,000	3,650,000	4R12802	F[2]
650	920	670	670	7.5	4	14,600	46,000	1,490,000	4,700,000	4R13005	F[1]
	920	680	680	7.5	7.5	14,800	47,000	1,520,000	4,800,000	4R13010	FR[1]
	920	690	690	7.5	7.5	14,300	46,500	1,460,000	4,750,000	4R13003	F
660	820	440	440	5	4	7,300	27,800	745,000	2,840,000	4R13201	F
680	1,020	650	650	6	6	15,700	48,000	1,600,000	4,900,000	4R13603	FM[2]
	1,020	680	680	3	5	17,300	49,500	1,760,000	5,050,000	4R13604	F[2]

❶ Drawing details are shown in Page B-38.
❷ Minimal allowable dimension for chamfer dimension r or r_1.

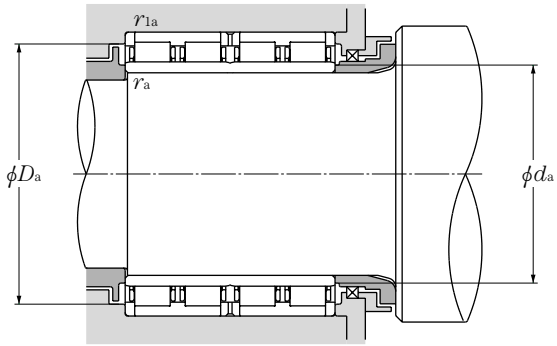

Abutment and fillet dimensions					Mass
	mm				kg
F_w	d_a min	D_a max	r_{as} max	r_{las} max	(approx.)
554	530	650	4	4	335
558	534	676	5	5	689
564	544	676	5	5	658
566	540	700	4	4	715
574.5	540	715	4	4	740
574	554	676	5	5	626
590	554	736	5	5	800
601	554	756	5	5	1,010
595	562	756	6	5	978
600	556.176	738.03	4	5	859
622	574	776	5	5	965
590	573	667	2.5	2.5	265
626	581	776	2	5	849
628	594	791	5	5	1,040
660	632	788	6	6	941
672	632	838	6	6	1,150
672	632	838	6	6	1,330
680	650	838	8	6	1,400
702	641	898	2.5	5	1,430
700	664	856	5	5	1,150
723	682	904	6	3	1,500
723	682	888	6	6	1,510
723	682	888	6	6	1,550
702	680	804	4	3	580
803	704	996	5	5	1,970
775	693	1,000	2.5	4	2,060

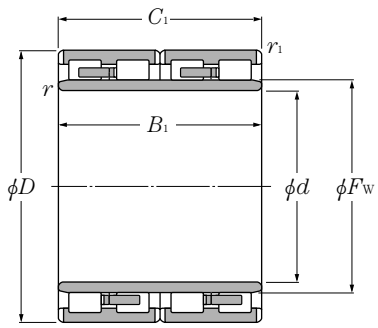

d 690～860mm

Boundary dimensions mm						Basic load ratings dynamic kN		dynamic kgf	static	Bearing numbers	Drawing❶ No.
d	D	B_1	C_1	$r_{s\,min}$❷	$r_{ls\,min}$❷	C_r	C_{or}	C_r	C_{or}		
690	980	715	715	7.5	7.5	16,800	54,500	1,720,000	5,550,000	4R13802	F[2]
	980	750	750	7.5	7.5	16,500	53,000	1,680,000	5,400,000	4R13803	FM[2]
710	1,000	715	715	9.5	6	16,800	54,500	1,710,000	5,550,000	4R14205	FS[4]
725	1,000	700	700	6	6	15,900	53,500	1,620,000	5,450,000	4R14501	F[1]
750	1,050	745	720	7.5	7.5	17,600	58,000	1,790,000	5,900,000	4R15001	FM[2]
	1,090	745	720	7.5	7.5	19,100	60,500	1,950,000	6,150,000	4R15002	FM[2]
755	1,070	750	750	7.5	7.5	18,700	58,500	1,910,000	5,950,000	4R15101	F[1]
760	1,030	750	750	7.5	7.5	17,300	59,500	1,760,000	6,050,000	4R15204	FM[1]
	1,080	805	790	6	6	18,700	61,000	1,900,000	6,250,000	4R15207	FM[2]
	1,100	745	720	7.5	7.5	19,100	60,500	1,950,000	6,150,000	4R15203	FM[2]
761.43	1,079.6	787.4	787.4	9.5	7.5	19,800	63,000	2,020,000	6,400,000	4R15201	F[1]
800	1,080	700	700	7.5	7.5	16,500	55,000	1,680,000	5,600,000	4R16004	F[1]
	1,080	750	750	6	6	17,300	59,000	1,760,000	6,000,000	4R16005	F[1]
820	1,130	800	800	7.5	7.5	19,600	66,500	2,000,000	6,800,000	4R16406	FM[1]
	1,130	800	800	7.5	7.5	21,500	72,000	2,200,000	7,300,000	4R16413	FMS[2]
	1,130	800	800	7.5	7.5	19,600	66,500	2,000,000	6,800,000	4R16415	F[2]
	1,130	825	800	7.5	7.5	19,600	66,500	2,000,000	6,800,000	4R16405	FM[1]
	1,160	840	840	7.5	7.5	21,600	71,000	2,200,000	7,250,000	4R16403	F[2]
830	1,080	710	710	6	6	16,200	59,500	1,660,000	6,100,000	4R16601	F[2]
840	1,160	840	840	5	7.5	21,600	71,000	2,200,000	7,250,000	4R16801	F[1]
850	1,150	650	650	9.5	9.5	15,700	51,000	1,610,000	5,200,000	4R17001	F[1]
	1,150	800	800	6	6	19,700	71,000	2,010,000	7,250,000	4R17003	F[1]
	1,150	840	840	6	6	22,000	77,500	2,240,000	7,900,000	4R17009	F[1]
	1,180	650	650	7.5	7.5	16,400	51,500	1,670,000	5,250,000	4R17004	F[1]
	1,180	850	850	9.5	9.5	24,100	78,500	2,460,000	8,000,000	4R17002	F
	1,180	850	850	7.5	7.5	21,700	72,000	2,210,000	7,350,000	4R17014	F[2]
860	1,140	750	750	7.5	7.5	17,200	61,000	1,750,000	6,200,000	4R17202	F[2]

❶ Drawing details are shown in Page B-38.
❷ Minimal allowable dimension for chamfer dimension r or r_1.

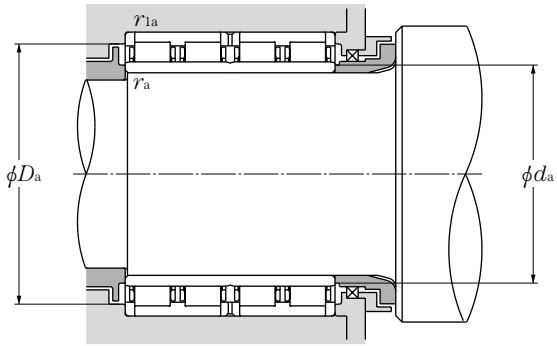

Abutment and fillet dimensions					Mass
	mm				kg
F_w	d_a min	D_a max	r_{as} max	r_{las} max	(approx.)
767.5	722	948	6	6	1,850
766	722	948	6	6	1,900
787.5	750	976	8	5	1,900
796	749	976	5	5	1,730
830	782	1,018	6	6	2,180
845	782	1,058	6	6	2,530
837	787	1,038	6	6	2,260
828	792	998	6	6	2,000
845	784	1,056	5	5	2,550
855	792	1,068	6	6	2,560
846	801.425	1,047.6	8	6	2,420
870	832	1,048	6	6	1,950
880	824	1,056	5	5	2,090
903	852	1,098	6	6	2,450
903	852	1,098	6	6	2,530
903	852	1,098	6	6	2,530
903	852	1,098	6	6	2,520
910	852	1,128	6	6	2,930
896	854	1,056	5	5	1,780
920	860	1,128	4	6	2,840
941	890	1,110	8	8	1,980
930	874	1,126	5	5	2,430
928	874	1,126	5	5	2,640
945	882	1,148	6	6	2,270
928	890	1,140	8	8	2,970
940	882	1,148	6	6	2,980
938	892	1,108	6	6	2,200

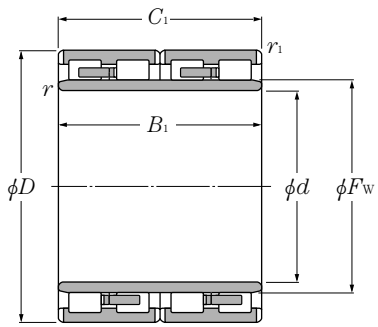

d 860～1,200mm

Boundary dimensions mm						Basic load ratings dynamic kN		dynamic kgf	static	Bearing numbers	Drawing❶ No.
d	D	B_1	C_1	$r_{s\,min}$❷	$r_{ls\,min}$❷	C_r	C_{or}	C_r	C_{or}		
860	1,160	735	710	6	6	17,800	62,500	1,810,000	6,400,000	**4R17201**	F[1)]
900	1,230	895	870	7.5	7.5	24,700	88,000	2,520,000	9,000,000	**4R18001**	FM[2)]
920	1,280	865	850	7.5	7.5	26,200	88,500	2,670,000	9,000,000	**4R18401**	F
1,000	1,310	880	880	9.5	9.5	23,400	88,500	2,380,000	9,000,000	**4R20001**	F[1)]
	1,360	800	800	7.5	7.5	25,000	85,000	2,550,000	8,650,000	**4R20002**	F[1)]
1,030	1,380	850	850	7.5	7.5	24,400	89,000	2,490,000	9,100,000	**4R20601**	F[1)]
1,200	1,590	1,050	1,050	7.5	7.5	36,000	133,000	3,650,000	13,600,000	**4R24002**	FS

❶ Drawing details are shown in Page B-38.
❷ Minimal allowable dimension for chamfer dimension r or r_1.

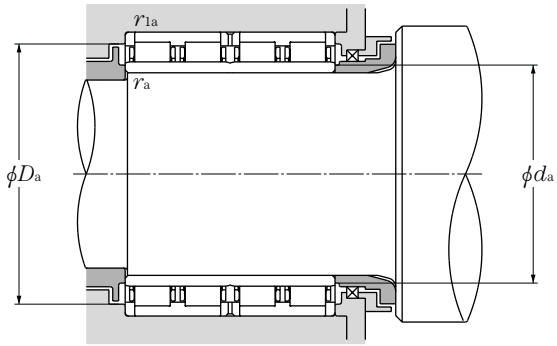

Abutment and fillet dimensions					Mass
		mm			kg
F_w	d_a min	D_a max	r_{as} max	r_{las} max	(approx.)
940	884	1,136	5	5	2,310
985	932	1,198	6	6	3,250
1,015	952	1,248	6	6	3,560
1,080	1,040	1,270	8	8	3,260
1,090	1,032	1,328	6	6	3,530
1,124	1,062	1,348	6	6	3,800
1,295	1,232	1,558	6	6	6,220

SL Type Cylindrical Roller Bearings

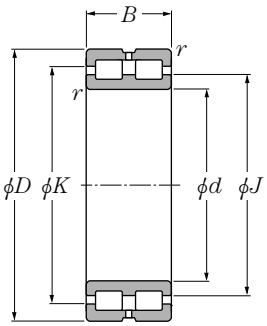

SL01-48 type SL01-49 type
(Fixed side)

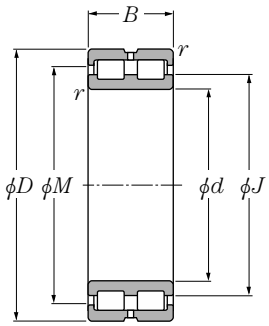

SL02-48 type SL02-49 type
(Free side)

d 100～280mm

Boundary dimensions mm				Basic load ratings dynamic kN	static kN	dynamic kgf	static kgf	Bearing numbers		Dimensions mm			
d	D	B	$r_{s\,min}$ ❶	C_r	C_{or}	C_r	C_{or}	Fixed side	Free side	J	K	M	e ❷
100	140	40	1.1	194	400	19,800	41,000	**SL01-4920**	**SL02-4920**	116	125	126.5	2
110	150	40	1.1	202	430	20,600	44,000	**SL01-4922**	**SL02-4922**	125	134	135.5	2
120	165	45	1.1	226	480	23,100	49,000	**SL01-4924**	**SL02-4924**	138.5	148.5	150.5	3
130	180	50	1.5	262	555	26,700	56,500	**SL01-4926**	**SL02-4926**	149	160	162	4
140	190	50	1.5	272	595	27,700	60,500	**SL01-4928**	**SL02-4928**	159.5	170	172.5	4
150	190	40	1.1	235	575	23,900	58,500	**SL01-4830**	**SL02-4830**	165.5	173.5	175.5	2
	210	60	2	410	865	41,500	88,000	**SL01-4930**	**SL02-4930**	171.5	186	189.5	4
160	200	40	1.1	241	605	24,600	62,000	**SL01-4832**	**SL02-4832**	173.5	182.5	184	2
	220	60	2	425	935	43,500	95,000	**SL01-4932**	**SL02-4932**	185	199	203	4
170	215	45	1.1	265	650	27,000	66,500	**SL01-4834**	**SL02-4834**	186.5	196.5	198	3
	230	60	2	435	980	44,500	100,000	**SL01-4934**	**SL02-4934**	194	208	211.5	4
180	225	45	1.1	275	695	28,000	71,000	**SL01-4836**	**SL02-4836**	199	209	211	3
	250	69	2	550	1,230	56,000	125,000	**SL01-4936**	**SL02-4936**	206	222	225.5	4
190	240	50	1.5	315	785	32,000	80,000	**SL01-4838**	**SL02-4838**	208.5	219.5	221.5	4
	260	69	2	565	1,290	57,500	131,000	**SL01-4938**	**SL02-4938**	216.5	232.5	235.5	4
200	250	50	1.5	320	825	33,000	84,000	**SL01-4840**	**SL02-4840**	219	230	232	4
	280	80	2.1	665	1,500	68,000	153,000	**SL01-4940**	**SL02-4940**	232	250	253.5	5
220	270	50	1.5	340	905	34,500	92,500	**SL01-4844**	**SL02-4844**	240	251	253	4
	300	80	2.1	695	1,620	70,500	165,000	**SL01-4944**	**SL02-4944**	249.5	267.5	271	5
240	300	60	2	510	1,330	52,000	136,000	**SL01-4848**	**SL02-4848**	261	275	276.5	4
	320	80	2.1	730	1,770	74,000	181,000	**SL01-4948**	**SL02-4948**	272.5	290.5	294	5
260	320	60	2	535	1,450	54,500	148,000	**SL01-4852**	**SL02-4852**	283	297	300	4
	360	100	2.1	1,070	2,520	109,000	257,000	**SL01-4952**	**SL02-4952**	297	320	324.5	6
280	350	69	2	685	1,860	69,500	189,000	**SL01-4856**	**SL02-4856**	308	324	327	4
	380	100	2.1	1,110	2,710	114,000	277,000	**SL01-4956**	**SL02-4956**	319	342	346	6

❶ Maximum allowable dimension for chamfer dimension r. ❷ Allowable axial move.

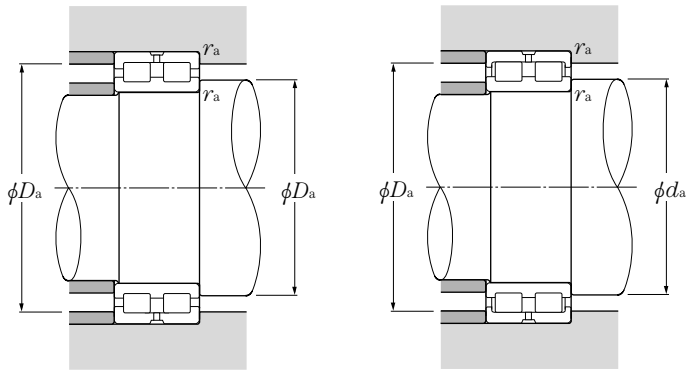

Fixed side **Free side**

Abutment and fillet dimensions mm			Mass (approx.) kg	
d_a ❸ min	D_a ❸ max	r_{as} max	Fixed side	Free side
106.5	133.5	1	1.95	1.9
116.5	143.5	1	2.15	2.1
126.5	158.5	1	2.95	2.85
138	172	1.5	3.95	3.8
148	182	1.5	4.2	4.1
156.5	183.5	1	2.9	2.8
159	201	2	6.65	6.45
166.5	193.5	1	3.05	2.9
169	211	2	7	6.8
176.5	208.5	1	4.1	3.95
179	221	2	7.35	7.1
186.5	218.5	1	4.3	4.15
189	241	2	10.7	10.5
198	232	1.5	5.65	5.45
199	251	2	11.2	10.9
208	242	1.5	5.9	5.7
211	269	2	15.7	15.3
228	262	1.5	6.4	6.2
231	289	2	17.1	16.6
249	291	2	10.2	9.9
251	309	2	18.4	17.9
269	311	2	11	10.6
271	349	2	32	31.2
289	341	2	16	15.6
291	369	2	33.9	33.1

❸ Use J and K dimensions for bearings operating at inclined or large axial loads.

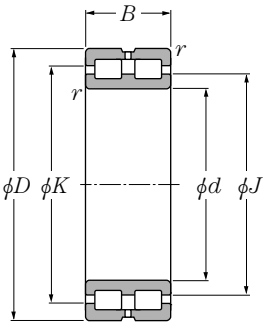

SL01-48 type SL01-49 type
(Fixed side)

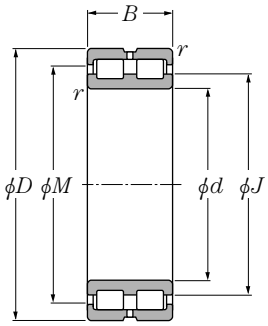

SL02-48 type SL02-49 type
(Free side)

d 300～440mm

Boundary dimensions mm				Basic load ratings dynamic kN	static kN	dynamic kgf	static kgf	Bearing numbers		Dimensions mm			
d	D	B	$r_{s\,min}$ ❶	C_r	C_{or}	C_r	C_{or}	Fixed side	Free side	J	K	M	e ❷
300	380	80	2.1	805	2,160	82,000	220,000	**SL01-4860**	**SL02-4860**	330	348	351	6
	420	118	3	1,580	3,800	161,000	385,000	**SL01-4960**	**SL02-4960**	344	371	377	6
320	400	80	2.1	835	2,310	85,000	236,000	**SL01-4864**	**SL02-4864**	353	371	374	6
	440	118	3	1,650	4,100	168,000	415,000	**SL01-4964**	**SL02-4964**	371	398	404	6
340	420	80	2.1	855	2,430	87,500	248,000	**SL01-4868**	**SL02-4868**	370	388	391	6
	460	118	3	1,690	4,300	172,000	440,000	**SL01-4968**	**SL02-4968**	388	416	421	6
360	440	80	2.1	885	2,580	90,000	264,000	**SL01-4872**	**SL02-4872**	393	411	414	6
	480	118	3	1,730	4,500	176,000	460,000	**SL01-4972**	**SL02-4972**	406	434	439	6
380	480	100	2.1	1,290	3,600	132,000	370,000	**SL01-4876**	**SL02-4876**	422	444	449	6
	520	140	4	2,300	5,900	235,000	600,000	**SL01-4976**	**SL02-4976**	437	469	475	7
400	540	140	4	2,410	6,200	246,000	635,000	**SL01-4980**	**SL02-4980**	450	484	490	7
420	560	140	4	2,470	6,500	252,000	665,000	**SL01-4984**	**SL02-4984**	472	505	512	7
440	600	160	4	3,000	7,850	305,000	800,000	**SL01-4988**	**SL02-4988**	503	540	546	7

❶ Maximum allowable dimension for chamfer dimension r. ❷ Allowable axial move.

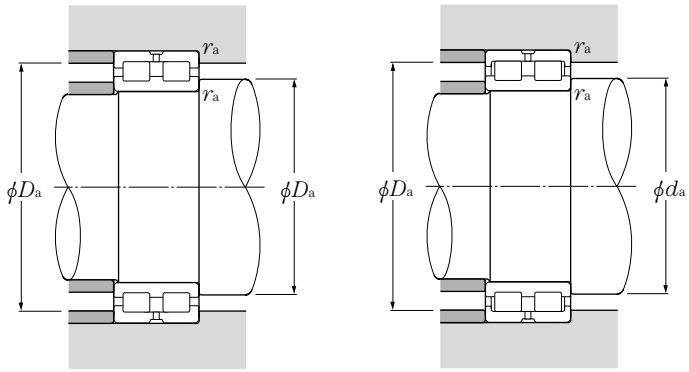

Fixed side **Free side**

Abutment and fillet dimensions mm			Mass (approx.) kg	
d_a ❸ min	D_a ❸ max	r_{as} max	Fixed side	Free side
311	369	2	23	22.2
313	407	2.5	53	51.9
331	389	2	24.3	23.5
333	427	2.5	56	54.9
351	409	2	25.6	24.8
353	447	2.5	59	57.8
371	429	2	27	26
373	467	2.5	62	60.8
391	469	2	45.3	44
396	504	3	92.3	90.5
416	524	3	96.4	94.6
436	544	3	101	98.6
456	584	3	139	137

❸ Use J and K dimensions for bearings operating at inclined or large axial loads.

SL Type Cylindrical Roller Bearings for Sheaves

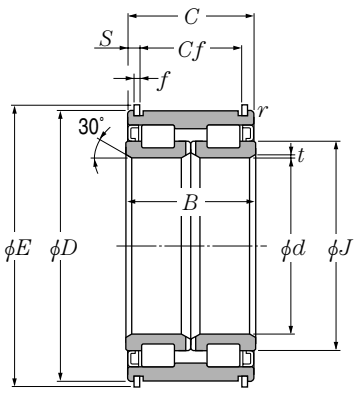

d 100～380mm

Boundary dimensions mm						Basic load ratings dynamic kN	static kN	dynamic kgf	static kgf	Bearing numbers
d	D	B	C	t	r	C_r	C_{or}	C_r	C_{or}	
100	150	67	66	1.5	1	330	580	33,500	59,500	**SL04-5020NR**
110	170	80	79	1.8	1.5	385	695	39,000	71,000	**SL04-5022NR**
120	180	80	79	1.8	1.5	400	750	41,000	76,500	**SL04-5024NR**
130	200	95	94	1.8	1.5	535	1,000	55,000	102,000	**SL04-5026NR**
140	210	95	94	1.8	1.5	600	1,120	61,000	115,000	**SL04-5028NR**
150	225	100	99	2	1.5	690	1,290	70,500	131,000	**SL04-5030NR**
160	240	109	108	2	2	720	1,390	73,500	142,000	**SL04-5032NR**
170	260	122	121	2	2	925	1,790	94,500	182,000	**SL04-5034NR**
180	280	136	135	2	2	1,090	2,140	111,000	218,000	**SL04-5036NR**
190	290	136	135	2	2	1,120	2,230	114,000	227,000	**SL04-5038NR**
200	310	150	149	2	2	1,310	2,650	133,000	270,000	**SL04-5040NR**
220	340	160	159	2.5	2	1,640	3,300	167,000	335,000	**SL04-5044NR**
240	360	160	159	2.5	2	1,710	3,550	175,000	365,000	**SL04-5048NR**
260	400	190	189	3	2.5	2,130	4,500	217,000	460,000	**SL04-5052NR**
280	420	190	189	3	2.5	2,170	4,700	221,000	475,000	**SL04-5056NR**
300	460	218	216	3	2.5	2,670	5,850	272,000	600,000	**SL04-5060NR**
320	480	218	216	3	2.5	2,720	6,100	278,000	620,000	**SL04-5064NR**
340	520	243	241	3.5	3	3,650	8,000	370,000	815,000	**SL04-5068NR**
360	540	243	241	3.5	3	3,750	8,300	380,000	845,000	**SL04-5072NR**
380	560	243	241	3.5	3	3,800	8,750	385,000	895,000	**SL04-5076NR**

Note 1. The above are greased bearings. 2. The above are treated for rust prevention.
3. The above are non contact shielded bearings. Also, contact sealed can be applied upon request.

SL Type Cylindrical Roller Bearings for Sheaves

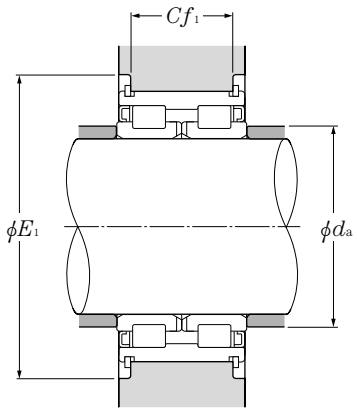

Dimensions mm					Abutment and fillet dimensions mm			Mass kg
J	E (approx.)	f	Cf	S	d_a	E_1	Cf_1 ❶	(approx.)
118.5	156	2.5	54	6	106	180	54	4.03
131.5	176	2.5	65	7	116.5	200	65	7
141.5	188	3	65	7	126.5	210	65	7.5
158	208	3	77	8.5	136.5	230	77	11.4
167	218	3	77	8.5	146.5	245	77	12.1
178	233	3	81	9	157	260	81	14.6
191	248	3	89	9.5	167	275	89	18.2
203	270	4	99	11	177	300	99	24.6
220	290	4	110	12.5	187	320	110	32.3
226	300	4	110	12.5	197	330	110	33.7
245.5	320	4	120	14.5	207	350	120	43.5
260	356	6	130	14.5	228.5	380	130	55.5
280.5	376	6	130	14.5	248.5	400	130	59.5
315.5	416	7	154	17.5	270	445	154	90.7
325	436	7	154	17.5	290	465	154	96.2
363	480	8	176	20	310	510	176	137
376	500	8	176	20	330	530	176	144
406	544	8	194	23.5	352	580	194	194
421	564	10	194	23.5	372	600	194	203
442	584	10	194	23.5	392	620	194	212

❶ Cf_1 deviation **SL04-5020NR～SL04-5034NR**：-0.1～ -0.5mm
SL04-5036NR～SL04-5076NR：-0.1～ -0.7mm

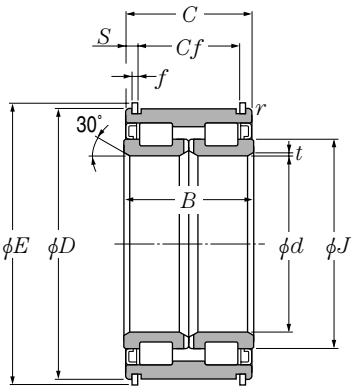

d 400～440mm

Boundary dimensions mm						Basic load ratings dynamic kN	static kN	dynamic kgf	static kgf	Bearing numbers
d	D	B	C	t	r	C_r	C_{or}	C_r	C_{or}	
400	600	272	270	3.5	3	4,250	9,950	435,000	1,010,000	**SL04-5080NR**
420	620	272	270	3.5	3	4,350	10,300	445,000	1,050,000	**SL04-5084NR**
440	650	280	278	4.5	4	4,500	11,000	460,000	1,120,000	**SL04-5088NR**

Note 1. The above are greased bearings. 2. The above are treated for rust prevention.
3. The above are non contact shielded bearings. Also, contact sealed can be applied upon request.

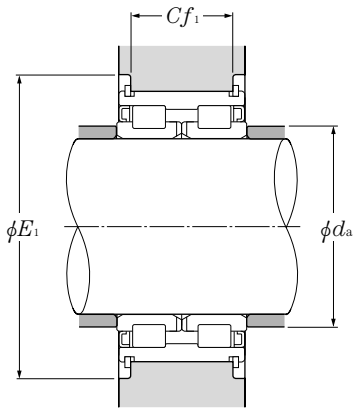

Dimensions mm					Abutment and fillet dimensions mm			Mass kg
J	E (approx.)	f	Cf	S	d_a	E_1	Cf_1 ❶	(approx.)
470	626	12	210	30	412	675	210	281
486	646	12	210	30	432	695	210	292
518	676	12	210	34	456	725	210	331

❶ Cf_1 deviation **SL04-5080NR～SL04-5088NR**：-0.1～ -0.7mm

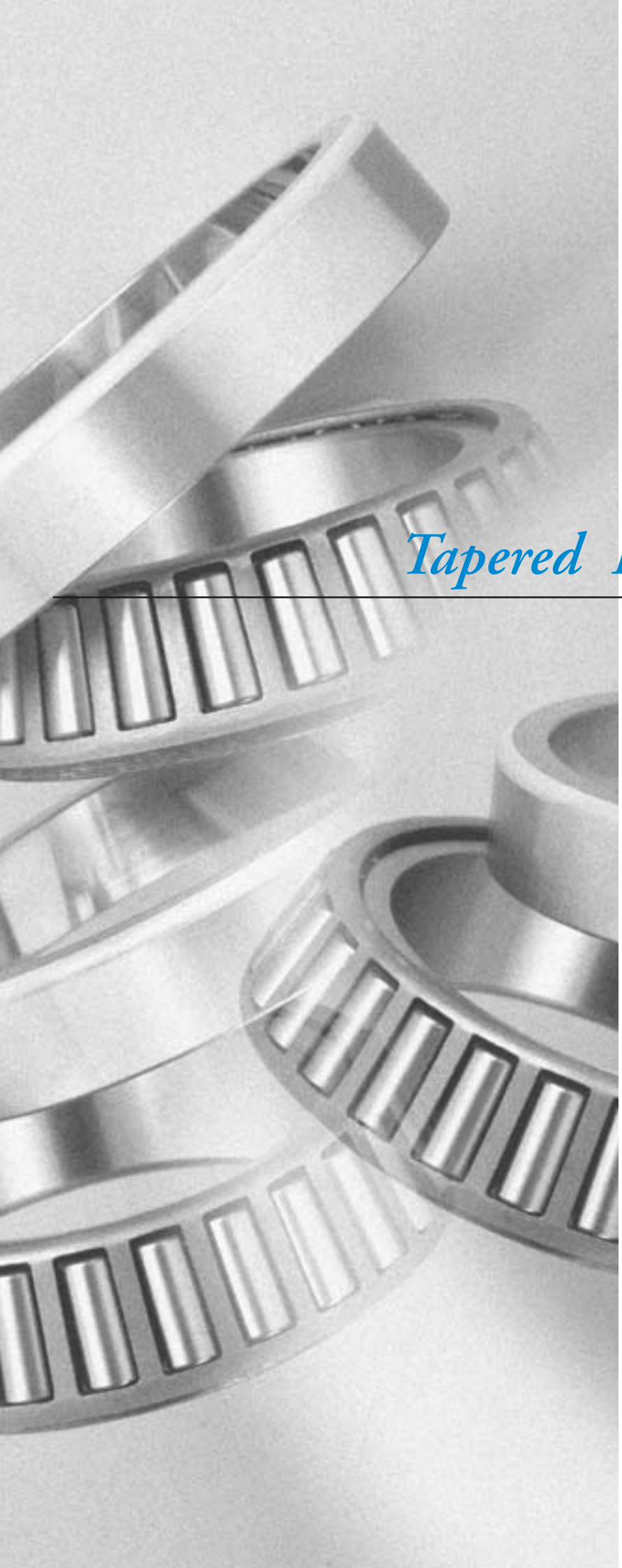

Tapered Roller bearings

1. Type, Structure and Characteristics

Tapered roller bearings are designed such that their conical rollers and raceways are arranged so that all elements of the roller and race way cones meet at a common apex on the bearing axis. (Refer to **Fig.1**) The rolling elements perform the real rotating movement on the raceway; the synthesized force from the inner and outer ring raceways guides the rollers, pressing them to the large rib on the inner ring. Metric and inch series are considered standard and both systems are widely used.

The inner ring, rollers and cage can be separated as a unit, or the CONE, from the outer ring, or the CUP. The cup and cone are called sub-units. Sub-unit dimensions for the nominal cup small inside diameter and bearing contact angle, as shown in **Fig. 2**, are standardized by ISO and ABMA and are compatible between sub-units. Double row and four row bearings are available in addition to single row bearings. Models and characteristics are shown in **Tables 1** and **2**.

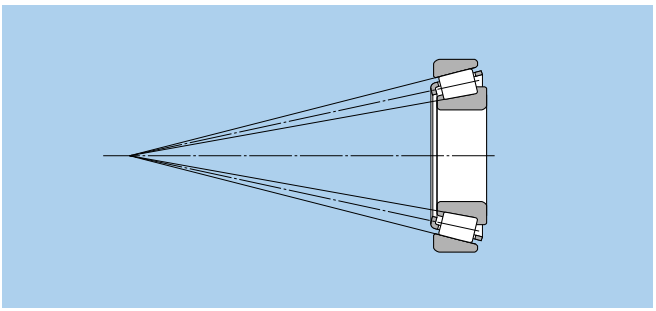

Fig.1

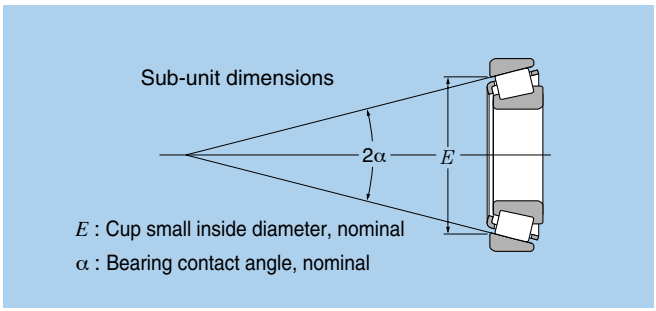

Fig.2

Table 1 Structure and characteristics of double row tapered roller bearings

Model	Drawing	Nominal number	Characteristics
Double row with vertex of contact angles outside of the bearing	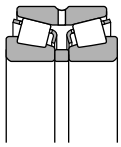	413XXX 423XXX 430XXX 432XXX CRI	● These bearings are designed with one double row outer ring and two pairs of inner rings with rollers. Bearings are adjusted so that their internal clearance becomes the specified value, the parts which have the same serial numbers should be assembled according to the assembly codes. ● These bearings support radial and axial loads. Since the cone pressure apex is wide, bearings are suitable where moment loads are applied. ● These bearings have the same function as the back-to-back duplex arrangement of single row bearings.
Double row with vertex of contact steep angles outside of the bearing	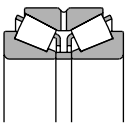	CRI	● This bearing model has a larger and steeper contact angle than the double row with vertex of contact angles outside the bearing. These bearings are used when the axial load is large. ● Since these bearings are adjusted so that the internal clearance is a specified value (like the double row with vertex of contact angles outside of bearing) the parts which have the same serial numbers should be assembled according to the assembly codes.
Double row with vertex of contact angles inside of the bearing	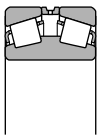	3230XX 3231XX CRD	● These bearings are designed with one double row inner ring with rollers and two pairs of outer rings and an outer ring spacer. ● These bearings accept the radial and axial loads. Since the cone pressure apex is short, bearings are not suitable when the moment is applied. ● Since these bearings are adjusted so that the internal clearance is the specified value (like the double row with vertex of contact angles outside of bearing) the parts which have the same serial numbers should be assembled according to the assembly codes.
Double row with vertex of contact steep angles inside of the bearing	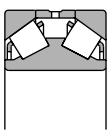	CRD	● This bearing model has a larger and steeper contact angle than the double row with vertex of contact angles inside the bearing. These bearings are used when the axial load is large or only axials are applied. ● Models without an outer ring spacer and with a key groove or notch on the inner ring (refer to the drawing) are also available. Consult **NTN** Engineering about this bearing's fit. ● These bearings may be pressurized by using a spring between the housing shoulder and outer ring end.

Table 2 Structure and characteristics of the four row tapered roller bearings

Model	Drawing	Nominal numbers	Characteristics
Four row tapered roller bearing	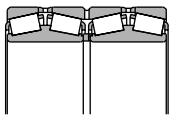	6259XX 6230XX 6231XX CRO	● These bearings are designed with two double row inner rings with rollers, one double row outer ring, two single outer ring and outer ring spacer/inner ring spacer. Bearings are adjusted so that their internal clearance becomes the specified value, the parts which have the same serial numbers should be assembled according to the assembly codes. ● The bearing is mainly used for the roll neck of rolling mill, and designed so as to become the maximum rating load for the allowable space in the roll neck part. ● The bearing uses the clearance-fit to make assemble and disassembley easier. For this purpose, bearings are designed with a helical groove on the inner ring bore to prevent wearing of the inner ring bore when creep occurs and uses the carbonized steel to prevent cracks on inner ring and improve the shock resistance. ● Please consult with **NTN** Engineering for fitting and bearing internal clearance.
Four row tapered roller bearing enclosed type	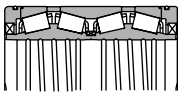	CRO···LL	● Bearings are designed with oil seals on both side of the bearing which is the same as the four row tapered roller bearings. ● Please consult with **NTN** Engineering for fitting and bearing internal clearance.

2. Dimensional Accuracy/Rotation Accuracy

Metric system bearings ·····**Table 3.4 (Page A-14)**
Inch system bearings ·····**Table 3.5 (Page A-16)**

3. Recommended Fitting

Metric system bearings ·····**Table 4.2 (Page A-24)**
Inch system bearings ·····**Table 4.5, 4.6 (Page A-27)**

4. Bearing Internal Clearance

Metric system bearings ·····**Table 5.7 (Page A-32)**
Inch system bearings ·····**Table 5.9 (Page A-34)**

5. General Operating Cautions

Slippage between the balls and raceways may occur when bearings are operated under small loads, or when the ratio between axial and radial loads of the duplexed bearings exceeds the value "e," and may cause smearing. This is most apparent when using large size tapered roller bearings due to the large cage mass. Please consult **NTN** Engineering for further details.

Inch system sizes: Tapered Roller Bearings (Single row · Double row) index

Bearing number CONE / CUP	ABMA Type	Page
8573/8520	TS	B-109
8573/8520D+A	TDO	B-140
8575/8520	TS	B-109
8575/8520D+A	TDO	B-140
8578/8520	TS	B-111
8578/8520D+A	TDO	B-140
29875/29820	TS	B-111
29875/29820D+A	TDO	B-142
29880/29820	TS	B-111
29880/29820D+A	TDO	B-142
38880/38820	TS	B-111
38885/38820	TS	B-111
67983/67920	TS	B-107
67983/67920D+A	TDO	B-138
67985/67920	TS	B-107
67985/67920D+A	TDO	B-140
67989/67920	TS	B-109
67989/67920D+A	TDO	B-140
80170/80217	TS	B-117
80176/80217	TS	B-117
80180/80217	TS	B-117
80385/80325	TS	B-117
80780/80720	TS	B-121
87737/87111	TS	B-107
87737/87112D+A	TDO	B-138
87750/87111	TS	B-107
87750/87112D+A	TDO	B-138
87762/87111	TS	B-107
87762/87112D+A	TDO	B-138
93708/93125	TS	B-107
93750/93125	TS	B-107
93750/93127D+A	TDO	B-138
93787/93125	TS	B-107
93787/93727D+A	TDO	B-138
93800/93125	TS	B-107
93800/93127D+A	TDO	B-138
93800D/93125+A	TDI	B-161
93825/93125	TS	B-109
93825/93127D+A	TDO	B-140
94649/94113	TS	B-105
94649/94114D+A	TDO	B-138
94687/94113	TS	B-105
94687/94114D+A	TDO	B-138
94700/94113	TS	B-107
94700/94114D+A	TDO	B-138
94706D/94113+A	TDI	B-161
96900/96140	TS	B-109
96900/96140D+A	TDO	B-140
96925/96140	TS	B-109
96925/96140D+A	TDO	B-140
EE113089/113170	TS	B-109
EE113091/113170	TS	B-109
EE113091/113171D+A	TDO	B-140
EE114080/114160	TS	B-107
EE114080/114161D+A	TDO	B-138
EE117063/117148	TS	B-105
EE126096D/126150+A	TDI	B-161
EE126097/126150	TS	B-111
EE126097/126151D+A	TDO	B-142
EE126098/126151D+A	TDO	B-142
EE126098/126150	TS	B-111
EE127095/127135	TS	B-111
EE127095/127136D+A	TDO	B-140
EE127097D/127135+A	TDI	B-161
EE128111/128160	TS	B-113
EE128111/128160D+A	TDO	B-142
EE128112/128160	TS	B-113
EE129120X/129172	TS	B-113
EE129120X/129120D+A	TDO	B-144
EE130902/131400	TS	B-109
EE130902/131401D+A	TDO	B-140
EE134100/134143	TS	B-111
EE134100/134144D+A	TDO	B-142
EE134102/134143	TS	B-111
EE134102/134144D+A	TDO	B-142
EE135111D/135155+A	TDI	B-163
HH144642/HH144614	TS	B-107
EE147112/147198D+A	TDO	B-144
EE161300/161900	TS	B-115
EE161300/161901D+A	TDO	B-144
EE161363/161900	TS	B-115
EE161363/161901D+A	TDO	B-144
EE161400/161850	TS	B-115
EE161400/161900	TS	B-115
EE161400/161901D+A	TDO	B-144
L163149/L163110	TS	B-115
L163149/L163110D+A	TDO	B-144
L163149D/L163110+A	TDI	B-163
EE170950/171450	TS	B-111
EE170950/171451D+A	TDO	B-142
EE170975/171450	TS	B-111
EE170975/171451D+A	TDO	B-140
EE170975D/171450+A	TDI	B-161
EE192150/192200	TS	B-115
EE192150/192201D+A	TDO	B-146
EE219068/219117	TS	B-105
EE219068/219122	TS	B-105
EE221025D/221575+A	TDI	B-161
EE221026/221575	TS	B-111
EE221026/221576D+A	TD0	B-142
EE222070/222127D+A	TDO	B-138
EE231400/231975	TS	B-115
EE231400/231976D+A	TDO	B-146
EE231401D/231975+A	TDI	B-163
EE231462/231975	TS	B-115
EE231462/231976D+A	TDO	B-146
HH231637/HH231615	TS	B-105
HH231649/HH231610	TS	B-105
HH231649/HH231615	TS	B-105
HH234031/HH234010	TS	B-105
HH234031/HH234011D+A	TDO	B-138
HH234048/HH234010	TS	B-105
HH234048/HH234011D+A	TDO	B-138
EE234156/234213D+A	TDO	B-146
EE234156/234215	TS	B-117
EE234156/234216D+A	TDO	B-146
EE234160/234213D+A	TDO	B-146
EE234160/234215	TS	B-117
HM237532/HM237510	TS	B-105
HM237532/HM237510D+A	TDO	B-138
HM237535/HM237510	TS	B-105
HM237535/HM237510D+A	TDO	B-138
HM237542/HM237510	TS	B-105
HM237542/HM237510D+A	TDO	B-138
HM237545/HM237510	TS	B-107
HM237545/HM237513	TS	B-107
HM237545/HM237510D+A	TDO	B-138
HM237546D/HM237510+A	TDI	B-161
H238140/H238110	TS	B-105
H238148/H238110	TS	B-105
H239640/H239610	TS	B-107
H239640/H239612D+A	TDO	B-138
H239649/H239610	TS	B-107
H239649/H239612	TS	B-107
H239649/H239612D+A	TDO	B-138
H239649D/H239610+A	TDI	B-161
LM241149/LM241110	TS	B-107
LM241149/LM241110D+A	TDO	B-138
M241547/M241510	TS	B-107
M241543/M241510	TS	B-107
M241543/M241510D+A	TDO	B-138
M241547/M241510D+A	TDO	B-138
M241549/M241510	TS	B-107
M241549/M241510D+A	TDO	B-138
EE241701/242375	TS	B-117
EE241701/242377D+A	TDO	B-146
H242649/H242610	TS	B-107
H242649/H242610D+A	TDO	B-140
H242649D/H242610+A	TDI	B-161
EE243190/243250	TS	B-119
EE243190/243251D+A	TDO	B-146
EE243192/243250	TS	B-119
EE243192/243251D+A	TDO	B-148
EE243196/243250	TS	B-119
EE243196/243251D+A	TDO	B-148
EE244180/244235	TS	B-119
EE244180/244236D+A	TDO	B-146
M244249/M244210	TS	B-109
M244249/M244210D+A	TDO	B-140
M244249D/M244210+A	TDI	B-161
H244849D/H244810+A	TDI	B-161
M246942/M246910	TS	B-109

Inch system sizes: Tapered Roller Bearings (Single row · Double row) index

Bearing number CONE / CUP	ABMA Type	Page
M246949/M246910	TS	B-109
H247535/H247510	TS	B-107
H247535/H247510D+A	TDO	B-138
H247549/H247510	TS	B-109
H247549/H247510D+A	TDO	B-140
LM247748D/LM247710+A	TDI	B-161
H249148/H249111D+A	TDO	B-140
M249732/M249710	TS	B-109
M249732/M249710D+A	TDO	B-140
M249734/M249710	TS	B-109
M249734/M249710D+A	TDO	B-140
M249736/M249710	TS	B-109
M249736/M249710D+A	TDO	B-140
M249748D/M249710+A	TDI	B-161
M249749/M249710	TS	B-111
M249749/M249710D+A	TDO	B-142
HH249749/HH249910D+A	TDO	B-142
HH249949/HH249910	TS	B-111
HH249949D/HH249910+A	TDI	B-161
M252337/M252310	TS	B-111
HM252343/HM252310	TS	B-111
HM252343/HM252310D+A	TDO	B-142
HM252344/HM252310D+A	TDO	B-142
M252349D/M252310+A	TDI	B-161
HM252348/HM252310	TS	B-111
HM252348/HM252310D+A	TDO	B-142
HM252349/HM252310D+A	TDO	B-142
M252330/M252310	TS	B-109
M252349/M252310	TS	B-113
HH255149D/HH255110+A	TDI	B-161
M255449/M255410	TS	B-113
M255449/M255410D+A	TDO	B-144
M255449D/M255410A+A	TDI	B-163
HM256849/HM256810	TS	B-113
HM256849/HM256810D+A	TDO	B-144
HM256849D/HM256810+A	TDI	B-163
M257149D/M257110+A	TDI	B-163
M257248D/M257210+A	TDI	B-163
HH258248/HH258210	TS	B-113
HH258248/HH258210D+A	TDO	B-144
LM258648D/LM258610+A	TDI	B-163
HM259048/HM259010	TS	B-115
HM259049/HM259010D+A	TDO	B-144
HM259049D/HM259010+A	TDI	B-163
HM261049/HM261010	TS	B-115
HM261049/HM261010D+A	TDO	B-144
HM261049D/HM261010+A	TDI	B-163
M262449D/M262410+A	TDI	B-163
HM262749/HM262710	TS	B-115
HM262749/HM262710D+A	TDO	B-144
HM262749D/HM262710+A	TDI	B-163
HM262748/HM262710	TS	B-115
LM263149D/LM263110+A	TDI	B-163
M263349D/M263310+A	TDI	B-163
HM265049/HM265010D+A	TDO	B-146
HM265049D/HM265010+A	TDI	B-163
HM265049/HM265010	TS	B-115
HM266447/HM266410	TS	B-117
HM266448/HM266410	TS	B-117
HM266449/HM266410	TS	B-117
HM266449/HM266410D+A	TDO	B-146
HM266446/HM266410	TS	B-117
HM266446/HM266410D+A	TDO	B-146
HM266448/HM266410D+A	TDO	B-146
HM266449D/HM266410+A	TDI	B-163
M268730/M268710	TS	B-117
HM268730/HM268710D+A	TDO	B-146
M268749/M268710	TS	B-117
M268749/M268710D+A	TDO	B-146
M268749D/M268710+A	TDI	B-165
M270749/M270710	TS	B-117
M270749/M270710D+A	TDO	B-146
M270749D/M270710+A	TDI	B-165
LM272235/LM272210	TS	B-119
LM272249/LM272210	TS	B-119
LM272249/LM272210D+A	TDO	B-146
LM272249D/LM272210+A	TDI	B-165
M272647D/M272610+A	TDI	B-165
M272749/M272710	TS	B-119
M272749/M272710D+A	TDO	B-146
M272749D/M272710+A	TDI	B-165
M274149/M274110	TS	B-119
M274149D/M274110+A	TDI	B-165
LM274449D/LM274410+A	TDI	B-165
EE275095/275155	TS	B-111
EE275095/275156D+A	TDO	B-140
EE275100/275155	TS	B-111
EE275100/275156D+A	TDO	B-142
EE275105/275155	TS	B-111
EE275105/275156D+A	TDO	B-142
EE275108/275155	TS	B-113
EE275108/275156D+A	TDO	B-142
EE275109D/275155+A	TDI	B-161
M275349D/M275310+A	TDI	B-165
M276449/M276410	TS	B-119
M276449/M276410D+A	TDO	B-148
M276449D/M276410+A	TDI	B-165
M276448D/M276410+A	TDI	B-165
M278749/M278710	TS	B-119
M278749/M278710D+A	TDO	B-148
M278749D/M278710+A	TDI	B-165
M280049D/M280010+A	TDI	B-167
M280349D/M280310+A	TDI	B-167
EE280626/281200	TS	B-105
M281049D/M281010+A	TDI	B-167
L281148/L281110	TS	B-121
L281148/L281110D+A	TDO	B-148
L281149D/L281110+A	TDI	B-167
M281649D/M281610+A	TDI	B-167
LM281849D/LM281810+A	TDI	B-167
LM282549D/LM282510+A	TDI	B-167
LM283649/LM283610	TS	B-121
LM283649D/LM283649+A	TDI	B-167
M284148D/M284111+A	TDI	B-167
M284249D/M284210+A	TDI	B-167
LM286249D/LM286210+A	TDI	B-167
LM287649D/LM287610+A	TDI	B-167
LM287849D/LM287810+A	TDI	B-167
EE291175/291750	TS	B-113
EE291175/291751D+A	TDO	B-144
EE291200D/291750+A	TDI	B-161
EE291201/291750	TS	B-113
EE291201/291751D+A	TDO	B-144
EE291250/291750	TS	B-115
EE291250/291751D+A	TDO	B-144
EE295102/295193	TS	B-111
EE295102/295192D+A	TDO	B-142
EE295110/295193	TS	B-113
EE295110/295192D+A	TDO	B-142
EE329119D/329172+A	TDI	B-163
EE333137/333197	TS	B-115
EE333137/333203D+A	TDO	B-144
EE333140/333197	TS	B-115
EE333140/333203D+A	TDO	B-146
M348449/M348410	TS	B-111
M349549/M349510	TS	B-111
EE350701/351687	TS	B-107
EE350750/351687	TS	B-107
L357049/L357010	TS	B-113
L357049/L357010D+A	TDO	B-144
LM361649/LM361610	TS	B-115
LL365340/LL365310D+A	TDO	B-146
LL365348/LL365310	TS	B-117
LM377449/LM377410	TS	B-119
LM377449/LM377410D+A	TDO	B-148
LM377449D/LM377410+A	TDI	B-165
EE380080/380190	TS	B-107
EE380081/380190	TS	B-107
EE420751/421437	TS	B-107
EE420751/421451D+A	TDO	B-138
EE420750D/421437+A	TDI	B-161
EE420800D/421437+A	TDI	B-161
EE420801/421437	TS	B-107
EE420801/421451D+A	TDO	B-138
EE426200/426330	TS	B-119
EE426200/426331D+A	TDO	B-148
EE430900/431575	TS	B-109
EE430900/431576D+A	TDO	B-140
EE435102/435165	TS	B-111
EE435102/435165D+A	TDO	B-142
HH437549/HH437510	TS	B-105
LM446349/LM446310	TS	B-109

Inch system sizes: Tapered Roller Bearings (Single row · Double row) index

Bearing number CONE / CUP	ABMA Type	Page
LM446349/LM446310D+A	TDO	B-140
EE450601/451212	TS	B-105
EE450601/451215D+A	TDO	B-138
450900D/451212	TDI	B-161
LM451345/LM451310	TS	B-111
LM451345/LM451310D+A	TDO	B-142
LM451349/LM451310	TS	B-111
LM451349/LM451310D+A	TDO	B-142
LM451349D/LM451310+A	TDI	B-161
L467549/L467510	TS	B-117
L476549/L476510	TS	B-119
L476549/L476510D+A	TDO	B-148
LL481448/LL481411	TS	B-121
EE526130/526190	TS	B-115
EE526130/526191D+A	TDO	B-144
EE529091D/529157+A	TDI	B-161
EE542220/542290	TS	B-119
EE542220/542291D+A	TDO	B-148
HM542948/HM542911	TS	B-107
543085/543114	TS	B-109
543085/543115D+A	TDO	B-140
544090/544118	TS	B-109
544091/544118	TS	B-109
545112/545141	TS	B-113
545112/545142D+A	TDO	B-144
LM545849/LM545810	TS	B-109
EE547341D/547480+A	TDI	B-167
L555233/L555210	TS	B-113
L555233/L555210D+A	TDO	B-142
L555249/L555210	TS	B-113
L555249/L555210D+A	TDO	B-144
LL562749/LL562710	TS	B-115
LM565943/LM565910	TS	B-115
LM565949/LM565910	TS	B-117
LM565949/LM565912	TS	B-117
LL566848/LL566810	TS	B-117
LM567949/LM567910	TS	B-117
L570649/L570610	TS	B-117
EE571703/572650	TS	B-117
EE571703/572651D+A	TDO	B-146
LL575343/LL575310	TS	B-119
LL575349/LL575310	TS	B-119
EE626210/626321D+A	TDO	B-148
EE640192/640260	TS	B-119
EE640192/640261D+A	TDO	B-148
EE649240/649310	TS	B-121
EE649240/649311D+A	TDO	B-148
EE649241D/649310+A	TDI	B-167
LM654642/LM654610	TS	B-113
LM654642/LM654610D+A	TDO	B-142
LM654648D/LM654610+A	TDI	B-163
LM654649/LM654610	TS	B-113
LM654649/LM654610D+A	TDO	B-144
EE655270/655345	TS	B-121
EE655271D/655345+A	TDI	B-167
LM665949/LM665910	TS	B-117
LM665949/LM665910D+A	TDO	B-146
M667935/M667911	TS	B-117
M667947D/M667910+A	TDI	B-165
M667948/M667910	TS	B-117
EE671801/672873	TS	B-119
EE671801/672875D+A	TDO	B-146
680235/680270	TS	B-121
LL687949/LL687910	TS	B-121
LL687949/LL687910D+A	TDO	B-148
EE722110/722185	TS	B-113
EE722110/722186D+A	TDO	B-142
EE722115/722185	TS	B-113
EE722115/722186D+A	TDO	B-144
EE724120/724195	TS	B-113
EE724120/724196D+A	TDO	B-142
LM742745/LM742710	TS	B-109
LM742745/LM742710D+A	TDO	B-140
LM742747/LM742710	TS	B-109
LM742749/LM742710	TS	B-109
LM742749/LM742710D+A	TDO	B-140
LM742749D/LM742710+A	TDI	B-161
EE743240/743320	TS	B-121
EE743240/743321D+A	TDO	B-148
HM746646/HM746610	TS	B-109
HM746646/HM746610D+A	TDO	B-140
EE752305/752380	TS	B-121
EE755280/755360	TS	B-121
EE755280/755361D+A	TDO	B-148
EE755281D/755360+A	TDI	B-167
EE755285/755360	TS	B-121
EE755285/755361D+A	TDO	B-148
LM757049/LM757010	TS	B-113
M757449D/M757410+A	TDI	B-163
LM761649D/LM761610+A	TDI	B-163
EE763330/763410	TS	B-121
LM763449D/LM763410+A	TDI	B-163
LM767745D/LM767710+A	TDI	B-165
LM767749D/LM767710+A	TDI	B-165
LM769349D/LM769310+A	TDI	B-165
L770847D/L770810+A	TDI	B-165
L770849D/L770810+A	TDI	B-165
LM770949/LM770910	TS	B-119
LL771948/LL771911	TS	B-119
LM772748/LM772710	TS	B-119
LM772748/LM772710D+A	TDO	B-148
LM772749D/LM772710+A	TDI	B-165
EE776420/776520	TS	B-121
EE776430/776520	TS	B-121
LL778149/LL778110	TS	B-119
LM778549D/LM778510+A	TDI	B-165
LL788345/LL788310	TS	B-121
LL788349/LL788310	TS	B-121
EE790114/790221	TS	B-113
EE790120/790221	TS	B-115
EE833160X/833232	TS	B-117
EE833160XD/833232+A	TDO	B-165
HH840249/HH840210	TS	B-107
EE843220/843290	TS	B-119
EE843220/843291D+A	TDO	B-148
EE843220D/843290+A	TDI	B-165
H852849/H852810	TS	B-113
L853049/L853010	TS	B-113
L860048/L860010	TS	B-115
L860049/L860010	TS	B-115
L865547/L865512	TS	B-115
LM869448/LM869410	TS	B-117
LM869448/LM869410D+A	TDO	B-146
LM869449D/LM869410+A	TDI	B-165
L879946/L879910	TS	B-121
L879947/L879910	TS	B-121
LL889049/LL889010	TS	B-121
LL889049/LL889010D+A	TDO	B-148
EE911600/912400	TS	B-117
EE911600/912401D+A	TDO	B-146
EE923095/923175	TS	B-111
EE923095/923176D+A	TDO	B-140
HH926744/HH926710	TS	B-105
HH926744/HH926716	TS	B-105
HH926749/HH926710	TS	B-105
HH932132/HH932110	TS	B-105
HH932145/HH932110	TS	B-105
HH932145/HH932115	TS	B-105
H936340/H936310	TS	B-105
H936340/H936316	TS	B-105
H936349/H936310	TS	B-105
EE941205/941950	TS	B-113
HH949549/HH949510	TS	B-109
HH949549/HH949510D+A	TDO	B-140
HH953749/HH953710	TS	B-111
HH953749/HH953710D+A	TDO	B-142
LM961548/LM961511D+A	TDO	B-144
LM961548/LM961511	TS	B-115
H961649/H961610	TS	B-115
H961649/H961610D+A	TDO	B-144
EE971354/972100	TS	B-115
EE971354/972102D+A	TDO	B-144

Inch system sizes: Tapered Roller Bearings (Four Row) index

Bearing number CONE / CUP	ABMA Type	Page
T-8576D/8520/8520D	TQO	B-185
9974D/9920/9920D	TQO	B-183
T-46791D/46720/46721D	TQO	B-181
T-48290D/48220/48220D	TQO	B-181
T-48393D/48320/48320D	TQO	B-181
T-48680D/48620/48620D	TQO	B-181
67791D/67720/67721D	TQO	B-183
T-67885D/67820/67820D	TQO	B-183
T-67986D/67920/67920D	TQO	B-183
81576D/81962/81963D	TQO	B-181
82681D/82620/82620D	TQO	B-183
EE126096D/126150/126151D	TQO	B-185
EE127097D/127137/127137D	TQO	B-185
EE132082D/132125/132126D	TQO	B-183
EE134102D/134143/134144D	TQO	B-185
EE135111D/135155/135156D	TQO	B-187
L163149D/L163110/L163110D	TQO	B-191
EE171000D/171450/171451D	TQO	B-185
EE181455D/182350/182351D	TQO	B-191
EE221027D/221575/221576D	TQO	B-185
M224749D/M224710/M224710D	TQO	B-181
T-M231649D/M231610/M231610D	TQO	B-181
EE234161D/234215/234216D	TQO	B-191
M238849D/M238810/M238810D	TQO	B-183
M240648D/M240611/M240611D	TQO	B-183
M241538D/M241510/M241510D	TQO	B-183
EE244181D/244235/244236D	TQO	B-193
T-M244249D/M244210/M244210D	TQO	B-185
LM247748D/LM247710/LM247710D	TQO	B-185
T-M249748D/M249710/M249710D	TQO	B-185
T-M252349D/M252310/M252310D	TQO	B-187
HM252349D/HM252310/HM252310D	TQO	B-185
M255449D/M255410/M255410D	TQO	B-187
HM256849D/HM256810/HM256810DG2	TQO	B-187
M257149D/M257110/M257110D	TQO	B-187

Bearing number CONE / CUP	ABMA Type	Page
M257248D/M257210/M257210D	TQO	B-189
LM258649D/LM258610/LM258610D	TQO	B-189
T-HM259049D/HM259010/HM259010D	TQO	B-189
HM261049D/HM261010/HM261010DA	TQO	B-189
M262449D/M262410/M262410DG2	TQO	B-189
T-HM262749D/HM262710/HM262710DG2	TQO	B-189
LM263149D/LM263110/LM263110D	TQO	B-191
M263349D/M263310/M263310D	TQO	B-191
HM265049D/HM265010/HM265010DG2	TQO	B-191
HM266449D/HM266410/HM266410DG2	TQO	B-191
M268749D/M268710/M268710DG2	TQO	B-193
M270749D/M270710/M270710DG2	TQO	B-193
LM272249D/LM272210/LM272210DG2	TQO	B-193
M274149D/M274110/M274110DG2	TQO	B-195
LM274449D/LM274410/LM274410D	TQO	B-195
EE275106D/275155/275156D	TQO	B-185
EE275109D/275160/275161D	TQO	B-187
M275349D/M275310/M275310DG2	TQO	B-195
M276449D/M276410/M276410DG2	TQO	B-195
M278749D/M278710/M278710DG2	TQO	B-195
LM278849D/LM278810/LM278810D	TQO	B-195
M280049D/M280010/M280010DG2	TQO	B-197
M280349D/M280310/M280310DG2	TQO	B-197
EE280700D/281200/281201D	TQO	B-183
L281149D/L281110/L281110DG2	TQO	B-197
M281649D/M281610/M281610DG2	TQO	B-197
LM281849D/LM281810/LM281810DG2	TQO	B-197
M282249D/M282210/M282210D	TQO	B-197
M283449D/M283410/M283410D	TQO	B-199
LM283649D/LM283610/LM283610DG2	TQO	B-199
M284148D/M284111/M284110DG2	TQO	B-199
M284249D/M284210/M284210DG2	TQO	B-199
M285848D/M285810/M285810D	TQO	B-199
LM286249D/LM286210/LM286210DG2	TQO	B-199
LM287649D/LM287610/LM287610DG2	TQO	B-199

Inch system sizes: Tapered Roller Bearings (Four Row) index

Bearing number CONE / CUP	ABMA Type	Page
LM288949D/LM288910/LM288910D	TQO	B-199
EE291202D/291750/291751D	TQO	B-187
EE329119D/329172/329173D	TQO	B-187
LM377449D/LM377410/LM377410DG2	TQO	B-195
T-LM451349D/LM451310/LM451310D	TQO	B-185
EE522126D/523087/523088D	TQO	B-195
EE526131D/526190/526191D	TQO	B-189
EE531201D/531300/531301XDG2	TQO	B-195
EE547341D/547480/547481DG2	TQO	B-199
T-EE640193D/640260/640261DG2	TQO	B-193
EE649241D/649310/649311DG2	TQO	B-197
T-LM654644D/LM654610/LM654610D	TQO	B-187
T-LM654648D/LM654610/LM654610D	TQO	B-187
LM665949D/LM665910/LM665910D	TQO	B-191
EE655271D/655345/655346DG2	TQO	B-197
M667947D/M667911/M667911DG2	TQO	B-193
EE700090D/700167/700168D	TQO	B-185
EE722111D/722185/722186D	TQO	B-187
EE724121D/724195/724196DG2	TQO	B-189
EE736173D/736238/736239D	TQO	B-193
EE737179D/737260/737260D	TQO	B-193
T-LM742749D/LM742714/LM742714D	TQO	B-183
EE755280D/755360/755361DG2	TQO	B-197
EE755281D/755360/755361DG2	TQO	B-197
M757448D/M757410/M757410D	TQO	B-187
M757449D/M757410/M757410D	TQO	B-189
LM761648D/LM761610/LM761610D	TQO	B-189
LM761649D/LM761610/LM761610D	TQO	B-189
LM763449D/LM763410/LM763410DG2	TQO	B-191
LM765149D/LM765110/LM765110D	TQO	B-191
LM767745D/LM767710/LM767710DG2	TQO	B-191
LM767749D/LM767710/LM767710DG2	TQO	B-191
LM769349D/LM769310/LM769310D	TQO	B-193
L770849D/L770810/L770810DG2	TQO	B-193
LM772749D/LM772710/LM772710DA	TQO	B-195
LM778549D/LM778510/LM778510DG2	TQO	B-195
EE822101D/822175/822176D	TQO	B-185
EE833161D/833232/833233D	TQO	B-193
EE843221D/843290/843291D	TQO	B-195
T-LM869449D/LM869410/LM869410DG2	TQO	B-193
EE911603D/912400/912401D	TQO	B-193
EE921150D/921875/921876D	TQO	B-187
EE931170D/931250/931251XDG2	TQO	B-193
EE971355D/972100/972103D	TQO	B-189

Metric system sizes

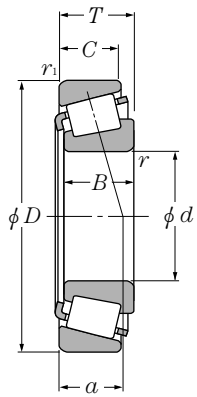

d 100～120mm

Boundary dimensions mm							Basic load ratings dynamic kN	static kN	dynamic kgf	static kgf	Bearing numbers
d	D	T	B	C	$r_{s\,min}$ ❶	$r_{ls\,min}$ ❶	C_r	C_{or}	C_r	C_{or}	
100	140	25	25	20	1.5	1.5	121	206	12,300	21,000	32920XU
	140	25	24	20	1.5	1.5	97.5	162	9,950	16,500	32920❷
	150	32	32	24	2	1.5	170	281	17,300	28,600	32020XU
	150	39	39	32.5	2	1.5	224	390	22,800	39,500	33020U
	180	37	34	29	3	2.5	258	335	26,300	34,500	30220U
	180	49	46	39	3	2.5	330	465	33,500	47,500	32220U
	215	51.5	47	39	4	3	410	500	41,500	51,000	30320U
	215	51.5	47	39	3	3	345	400	35,000	40,500	30320❷
	215	56.5	51	35	4	3	355	435	36,000	44,000	31320XU
	215	77.5	73	60	4	3	570	770	58,500	78,500	32320U
105	145	25	25	20	1.5	1.5	126	219	12,800	22,400	32921XA❷
	160	35	35	26	2.5	2	201	335	20,500	34,000	32021XU
	160	43	43	34	2.5	2	245	420	25,000	43,000	33021U
	190	39	36	30	3	2.5	287	380	29,300	38,500	30221U
	190	53	50	43	3	2.5	380	540	38,500	55,500	32221U
	225	53.5	49	41	4	3	435	535	44,500	54,500	30321U
	225	53.5	49	41	3	3	365	420	37,000	43,000	30321❷
	225	58	53	36	4	3	380	470	39,000	47,500	31321XU
	225	81.5	77	63	4	3	610	825	62,500	84,500	32321U
110	150	25	25	20	1.5	1.5	127	226	13,000	23,100	32922XA❷
	170	38	38	29	2.5	2	236	390	24,000	39,500	32022XU
	170	47	47	37	2.5	2	288	500	29,400	51,000	33022U
	200	41	38	32	3	2.5	325	435	33,000	44,000	30222U
	200	56	53	46	3	2.5	420	605	43,000	62,000	32222U
	240	54.5	50	42	4	3	480	590	49,000	60,000	30322U
	240	54.5	50	42	3	3	400	465	40,500	47,000	30322❷
	240	63	57	38	4	3	430	535	44,000	54,500	31322XU
	240	84.5	80	65	4	3	705	970	72,000	98,500	32322U
	240	84.5	80	65	3	3	620	830	63,500	84,500	32322❷
120	165	29	29	23	1.5	1.5	162	294	16,500	30,000	32924XU
	165	29	27	23	1.5	1.5	118	205	12,000	20,900	32924❷
	180	38	38	29	2.5	2	245	420	25,000	43,000	32024XU
	215	43.5	40	34	3	2.5	345	470	35,500	48,000	30224U
	215	61.5	58	50	3	2.5	460	680	47,000	69,500	32224U
	260	59.5	55	46	4	3	560	695	57,000	71,000	30324U
	260	59.5	55	46	3	3	465	550	47,500	56,000	30324❷

❶ Minimal allowable dimension for chamfer dimension r or r_1. ❷ This bearing does not incorporate the subunit dimensions.

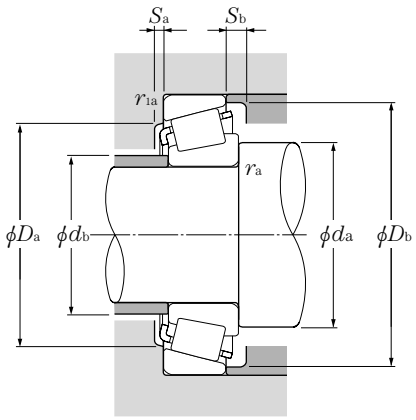

Equivalent bearing load

dynamic

$P_r = XF_r + YF_a$

$\frac{F_a}{F_r} \leqq e$		$\frac{F_a}{F_r} > e$	
X	Y	X	Y
1	0	0.4	Y_2

static

$P_{or} = 0.5F_r + Y_oF_a$

When $P_{or} < F_r$ use $P_{or} = F_r$

For values of e, Y_2 and Y_o see the table below.

Abutment and fillet dimensions									Load center	Constant	Axial load factors		Mass
mm									mm				kg
d_a	d_b	D_a		D_b	S_a	S_b	r_{as}	r_{1as}					
min	max	max	min	min	min	min	max	max	a	e	Y_2	Y_o	(approx.)
108.5	107.5	131.5	127.5	135.5	4	5	1.5	1.5	24.5	0.33	1.82	1.00	1.14
108.5	107.5	131.5	127.5	135.5	4	5	1.5	1.5	25	0.35	1.73	0.95	1.08
110	109	141.5	134	144	6	8	2	1.5	32.5	0.46	1.31	0.72	1.91
110	108	141.5	135	143	7	6.5	2	1.5	29.5	0.29	2.09	1.15	2.37
114	116	168	157	168	5	8	2.5	2	36	0.42	1.43	0.79	3.78
114	114	168	154	171	5	10	2.5	2	41.5	0.42	1.43	0.79	5.12
118	127	201	184	200	5	12.5	3	2.5	41.5	0.35	1.74	0.96	8.56
118	127	201	184	200	5	12.5	3	2.5	42	0.35	1.73	0.95	7.72
118	121	201	168	202	7	21.5	3	2.5	69	0.83	0.73	0.40	8.67
118	121	201	177	200	5	17.5	3	2.5	53	0.35	1.74	0.96	12.7
113.5	113.5	136.5	131.5	140.5	5	5	1.5	1.5	25	0.34	1.76	0.97	1.2
117	116	150	143	154	6	9	2	2	34.5	0.44	1.35	0.74	2.42
117	116	150	145	153	7	9	2	2	31	0.28	2.12	1.17	3
119	122	178	165	178	6	9	2.5	2	38	0.42	1.43	0.79	4.39
119	119	178	161	180	6	10	2.5	2	44	0.42	1.43	0.79	6.25
123	132	211	193	209	6	12.5	3	2.5	43.5	0.35	1.74	0.96	9.79
123	132	211	193	209	6	12.5	3	2.5	43.5	0.35	1.73	0.95	8.93
123	126	211	176	211	7	22	3	2.5	71.5	0.83	0.73	0.40	9.68
123	128	211	185	209	6	18.5	3	2.5	55	0.35	1.74	0.96	14.5
118.5	117.5	141.5	137	145.5	5	5	1.5	1.5	26.5	0.36	1.69	0.93	1.23
122	122	160	152	163	7	9	2	2	36.5	0.43	1.39	0.77	3.07
122	121	160	152	161	7	10	2	2	33.5	0.29	2.09	1.15	3.8
124	129	188	174	188	6	9	2.5	2	40	0.42	1.43	0.79	5.18
124	126	188	170	190	6	10	2.5	2	47	0.42	1.43	0.79	7.43
128	141	226	206	222	6	12.5	3	2.5	45.5	0.35	1.74	0.96	11.4
128	141	226	206	222	6	12.5	3	2.5	44	0.35	1.73	0.95	10.5
128	135	226	188	224	7	25	3	2.5	76	0.83	0.73	0.40	11.9
128	135	226	198	222	6	19.5	3	2.5	57.5	0.35	1.74	0.96	18
128	135	226	198	222	6.5	19.5	3	2.5	56	0.35	1.73	0.95	16.9
128.5	128.5	156.5	150	160	6	6	1.5	1.5	29.5	0.35	1.72	0.95	1.77
128.5	130.5	156.5	147.5	159.5	6	6	1.5	1.5	31	0.37	1.60	0.88	1.63
132	131	170	161	173	7	9	2	2	39	0.46	1.31	0.72	3.25
134	140	203	187	203	6	9.5	2.5	2	44	0.44	1.38	0.76	6.23
134	136	203	181	204	6	11.5	2.5	2	51.5	0.44	1.38	0.76	9.08
138	152	246	221	239	6	13.5	3	2.5	49	0.35	1.74	0.96	14.2
138	152	246	221	239	6	13.5	3	2.5	48.5	0.35	1.73	0.95	13.2

Metric system sizes

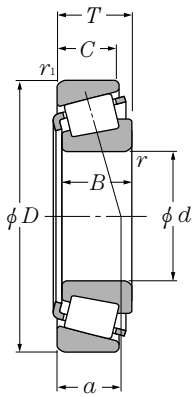

d 120～160mm

Boundary dimensions mm							Basic load ratings dynamic kN	static kN	dynamic kgf	static kgf	Bearing numbers
d	D	T	B	C	$r_{s\,min}$ ❶	$r_{ls\,min}$ ❶	C_r	C_{or}	C_r	C_{or}	
120	260	68	62	42	4	3	515	655	52,500	67,000	31324XU
	260	90.5	86	69	4	3	815	1,130	83,000	116,000	32324U
130	180	32	32	25	2	1.5	194	350	19,800	36,000	32926XU
	180	32	30	26	2	2	142	252	14,500	25,700	32926❷
	200	45	45	34	2.5	2	320	545	32,500	55,500	32026XU
	230	43.75	40	34	4	3	375	505	38,000	51,500	30226U
	230	67.75	64	54	4	3	530	815	54,000	83,000	32226U
	280	63.75	58	49	5	4	650	830	66,000	84,500	30326U
	280	72	66	44	5	4	600	780	61,500	79,500	31326XU
	280	98.75	93	78	4	4	895	1,240	91,000	126,000	32326
140	190	32	32	25	2	1.5	200	375	20,400	38,000	32928XU
	210	45	45	34	2.5	2	330	580	33,500	59,500	32028XU
	250	45.75	42	36	4	3	420	570	43,000	58,500	30228U
	250	45.75	42	36	3	3	375	485	38,000	49,500	30228❷
	250	71.75	68	58	4	3	610	920	62,500	94,000	32228U
	300	67.75	62	53	5	4	735	950	75,000	97,000	30328U
	300	67.75	62	53	4	4	640	780	65,000	80,000	30328❷
	300	77	70	47	5	4	685	905	70,000	92,500	31328XU
	300	107.75	102	85	4	4	985	1,370	101,000	140,000	32328
150	210	38	38	30	2.5	2	268	490	27,300	50,000	32930XU
	225	48	48	36	3	2.5	370	655	37,500	67,000	32030XU
	270	49	45	38	4	3	450	605	46,000	61,500	30230U
	270	77	73	60	4	3	700	1,070	71,500	109,000	32230U
	320	72	65	55	5	4	825	1,070	84,000	109,000	30330U
	320	72	65	55	4	4	680	875	69,500	89,000	30330❷
	320	82	75	50	5	4	775	1,030	79,000	105,000	31330XU
	320	114	108	90	4	4	1,160	1,750	119,000	179,000	32330
160	220	38	38	30	2.5	2	276	520	28,200	53,000	32932XU
	240	51	51	38	3	2.5	435	790	44,500	80,500	32032XU
	290	52	48	40	4	3	525	720	53,500	73,500	30232U
	290	84	80	67	4	3	890	1,420	90,500	145,000	32232U
	340	75	68	58	5	4	915	1,200	93,500	122,000	30332U
	340	75	68	58	4	4	755	975	77,000	99,500	30332❷
	340	121	114	95	4	4	1,230	1,840	126,000	188,000	32332

❶ Minimal allowable dimension for chamfer dimension r or r_1. ❷ This bearing does not incorporate the subunit dimensions.

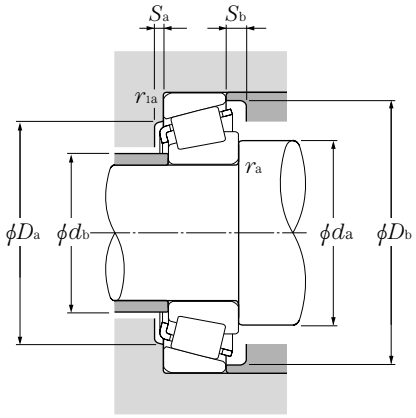

Equivalent bearing load

dynamic

$P_r = XF_r + YF_a$

$\frac{F_a}{F_r} \leqq e$		$\frac{F_a}{F_r} > e$	
X	Y	X	Y
1	0	0.4	Y_2

static

$P_{or} = 0.5F_r + Y_oF_a$

When $P_{or} < F_r$ use $P_{or} = F_r$

For values of e, Y_2 and Y_o see the table below.

Abutment and fillet dimensions mm									Load center mm	Constant	Axial load factors		Mass kg
d_a min	d_b max	D_a max	D_a min	D_b min	S_a min	S_b min	r_{as} max	r_{1as} max	a	e	Y_2	Y_o	(approx.)
138	145	246	203	244	9	26	3	2.5	82.5	0.83	0.73	0.40	15.4
138	145	246	213	239	6	21.5	3	2.5	61.5	0.35	1.74	0.96	22.4
140	139	171.5	163.5	174	6	7	2	1.5	31.5	0.34	1.77	0.97	2.36
140	139	170	163.5	174	6	6	2	2	34	0.37	1.60	0.88	2.22
142	144	190	178	192	8	11	2	2	43.5	0.43	1.38	0.76	4.96
148	152	216	203	218	7	9.5	3	2.5	45.5	0.44	1.38	0.76	7.25
148	146	216	193	219	7	13.5	3	2.5	57	0.44	1.38	0.76	11.2
152	164	262	239	255	8	14.5	4	3	53.5	0.35	1.74	0.96	17.4
152	155.5	262	214.5	263	9	28	4	3	87.5	0.83	0.73	0.40	19
148	160.5	262	230	264	2.4	20	3	3	67.5	0.35	1.73	0.95	27.2
150	150	181.5	177	184	6	6	2	1.5	34	0.36	1.67	0.92	2.51
152	153	200	187	202	8	11	2	2	46	0.46	1.31	0.72	5.28
158	163	236	219	237	7	9.5	3	2.5	48.5	0.44	1.38	0.76	9.26
158	163	236	219	237	7	9.5	2.5	2.5	47.5	0.43	1.39	0.77	8.37
158	158	236	210	238	9	13.5	3	2.5	61	0.44	1.38	0.76	14.1
162	179	282	251	273	9	14.5	4	3	56.5	0.35	1.74	0.96	21.2
162	179	282	252	273	9	14.5	4	3	57	0.35	1.73	0.95	20.4
162	165	282	234	280	9	30	4	3	94	0.83	0.73	0.40	23
158	170.5	282	244	281	1.5	20	3	3	74.5	0.35	1.73	0.95	33.2
162	162	200	192	202	7	8	2	2	36.5	0.33	1.83	1.01	3.92
164	164	213	200	216	8	12	2.5	2	49.5	0.46	1.31	0.72	6.37
168	175	256	234	255	7	11	3	2.5	51.5	0.44	1.38	0.76	11.2
168	170	256	226	254	8	17	3	2.5	64.5	0.44	1.38	0.76	18.2
172	193	302	269	292	8	17	4	3	61	0.35	1.74	0.96	25.5
172	193	302	269	292	8	17	4	3	62.5	0.37	1.60	0.88	24.7
172	176	302	250	302	9	32	4	3	100	0.83	0.73	0.40	27.7
168	184	302	254	298	4.3	24	3	3	80	0.37	1.60	0.88	42
172	170.5	210	199	213.5	7	8	2	2	38.5	0.35	1.73	0.95	4.15
174	175	228	213	231	8	13	2.5	2	52.5	0.46	1.31	0.72	7.8
178	189	276	252	272	8	12	3	2.5	55.5	0.44	1.38	0.76	12.9
178	182	276	242	275	10	17	3	2.5	70	0.44	1.38	0.76	23.5
182	205	322	286	310	10	17	4	3	64	0.35	1.74	0.96	29.9
182	205	322	286	311	10	17	4	3	65.5	0.37	1.60	0.88	29.2
178	197.5	322	272	318.5	2.3	26	3	3	85	0.37	1.60	0.88	49

Metric system sizes

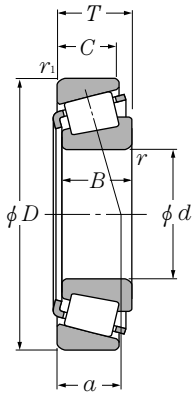

d 170～220mm

Boundary dimensions mm							Basic load ratings dynamic kN	static kN	dynamic kgf	static kgf	Bearing numbers
d	D	T	B	C	$r_{s\,min}$ ❶	$r_{ls\,min}$ ❶	C_r	C_{or}	C_r	C_{or}	
170	230	38	38	30	2.5	2	286	560	29,200	57,000	32934XU
	260	57	57	43	3	2.5	500	895	51,000	91,000	32034XU
	310	57	52	43	5	4	610	845	62,000	86,500	30234U
	310	91	86	71	5	4	1,000	1,600	102,000	163,000	32234U
	360	80	72	62	5	4	1,010	1,320	103,000	135,000	30334U
	360	80	72	62	4	4	845	1,100	86,000	113,000	30334❷
	360	127	120	100	4	4	1,310	1,940	133,000	198,000	32334
180	250	45	45	34	2.5	2	350	700	36,000	71,500	32936XU
	280	64	64	48	3	2.5	645	1,170	66,000	119,000	32036XUE1
	320	57	52	43	5	4	630	890	64,000	91,000	30236U
	320	91	86	71	5	4	1,030	1,690	105,000	172,000	32236U
	380	83	75	64	4	4	910	1,190	93,000	121,000	30336
	380	134	126	106	4	4	1,440	2,150	147,000	219,000	32336
190	260	45	45	34	2.5	2	355	710	36,000	72,000	32938XU
	260	45	42	36	2.5	2.5	280	525	28,600	53,500	32938❷
	290	64	64	48	3	2.5	655	1,210	67,000	124,000	32038XUE1
	340	60	55	46	5	4	715	1,000	73,000	102,000	30238U
	340	97	92	75	5	4	1,150	1,850	117,000	189,000	32238U
	340	97	92	75	4	4	1,000	1,670	102,000	171,000	32238❷
	400	86	78	65	5	5	935	1,200	95,000	123,000	30338
	400	140	132	109	5	5	1,590	2,390	162,000	244,000	32338
200	280	51	51	39	3	2.5	485	895	49,000	91,000	32940XUE1
	310	70	70	53	3	2.5	800	1,470	81,500	149,000	32040XUE1
	360	64	58	48	5	4	785	1,110	80,000	113,000	30240U
	360	104	98	82	5	4	1,320	2,130	134,000	217,000	32240U
	360	104	98	82	4	4	1,150	1,970	118,000	201,000	32240❷
	420	89	80	67	5	5	1,050	1,370	107,000	140,000	30340
	420	146	138	115	5	5	1,740	2,650	178,000	270,000	32340
220	300	51	51	39	3	2.5	480	950	49,000	97,000	32944XUE1
	300	51	48	41	2.5	2.5	345	670	35,500	68,500	32944E1❷
	340	76	76	57	4	3	920	1,690	94,000	173,000	32044XU
	400	72	65	54	4	4	815	1,220	83,000	124,000	30244
	400	114	108	90	4	4	1,390	2,410	142,000	246,000	32244
	460	97	88	73	5	5	1,260	1,690	129,000	172,000	30344
	460	154	145	122	5	5	2,020	3,050	206,000	315,000	32344

❶ Minimal allowable dimension for chamfer dimension r or r_1. ❷ This bearing does not incorporate the subunit dimensions.

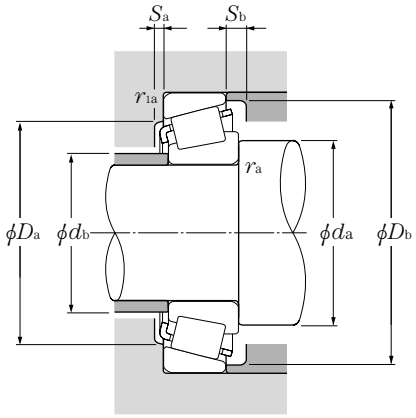

Equivalent bearing load

dynamic

$P_r = XF_r + YF_a$

$\frac{F_a}{F_r} \leqq e$		$\frac{F_a}{F_r} > e$	
X	Y	X	Y
1	0	0.4	Y_2

static

$P_{or} = 0.5F_r + Y_oF_a$

When $P_{or} < F_r$ use $P_{or} = F_r$

For values of e, Y_2 and Y_o see the table below.

Abutment and fillet dimensions									Load center	Constant	Axial load factors		Mass
mm									mm				kg
d_a	d_b	D_a		D_b	S_a	S_b	r_{as}	r_{1as}					
min	max	max	min	min	min	min	max	max	a	e	Y_2	Y_o	(approx.)
182	183	220	213	222	7	8	2	2	42.5	0.38	1.57	0.86	4.4
184	187	248	230	249	10	14	2.5	2	56	0.44	1.35	0.74	10.5
192	203	292	266	288	8	14	4	3	60.5	0.44	1.38	0.76	17
192	201	292	258	293	10	20	4	3	75	0.44	1.38	0.76	28.7
192	221	342	303	329	10	18	4	3	68	0.35	1.74	0.96	35.3
192	221	342	303	332	10	18	4	3	69.5	0.37	1.60	0.88	34.8
188	209	342	287	336	1.5	27	3	3	89.5	0.37	1.60	0.88	56.5
192	193	240	225	241	8	11	2	2	54	0.48	1.25	0.69	6.54
194	199	268	247	267	10	16	2.5	2	59.5	0.42	1.42	0.78	14.5
202	211	302	274	297	9	14	4	3	63	0.45	1.33	0.73	17.7
202	204	302	267	305	10	20	4	3	77.5	0.45	1.33	0.73	30.7
198	227.5	362	314	345	1.5	19	3	3	72.5	0.37	1.60	0.88	38.9
198	221	362	305	357	2.4	28	3	3	95	0.37	1.60	0.88	67.8
202	204	250	235	251	8	11	2	2	55	0.48	1.26	0.69	6.77
202	204	248	235	251	8	9	2	2	48.5	0.37	1.60	0.88	6.43
204	209	278	257	279	10	16	2.5	2	62.5	0.44	1.36	0.75	15.1
212	228	322	295	316	9	14	4	3	64	0.44	1.38	0.76	20.8
212	216	322	282	323	11	22	4	3	82	0.44	1.38	0.76	36.1
212	216	322	286	323	11	22	4	3	87.5	0.49	1.23	0.68	33.3
212	242	378	335	366.5	2.3	21	4	4	74.5	0.37	1.60	0.88	43.5
212	233.5	378	320	373.5	1.5	31	4	4	100	0.37	1.60	0.88	76.9
214	214	268	254	271	9	12	2.5	2	53.5	0.39	1.52	0.84	8.88
214	221	298	273	297	11	17	2.5	2	66.5	0.43	1.39	0.77	19.3
222	242	342	311	336	10	16	4	3	70	0.44	1.38	0.76	25.4
222	230	342	298	340	11	22	4	3	85	0.41	1.48	0.81	43.6
222	230	342	302	344	11	22	4	3	91.5	0.49	1.23	0.68	43.6
222	252.5	398	350	382.5	5.3	22	4	4	77	0.37	1.60	0.88	51.5
222	243.5	398	335	391.5	3.2	31	4	4	105	0.37	1.60	0.88	88.8
234	234	288	271	290	10	12	2.5	2	59.5	0.43	1.41	0.78	10.2
234	235	288	274	290	10	10	2.5	2	57	0.39	1.55	0.85	9.63
238	243	326	300	326	12	19	3	2.5	72.5	0.43	1.39	0.77	25
238	263	382	334	368	3.4	18	3	3	82	0.49	1.23	0.68	34.7
238	255	382	323	380.5	4.4	24	3	3	102	0.49	1.23	0.68	59.9
242	276.5	438	383	418.5	4.2	24	4	4	86.5	0.37	1.60	0.88	66.7
242	267.5	438	371	431	1.5	32	4	4	112	0.37	1.60	0.88	112.8

Metric system sizes

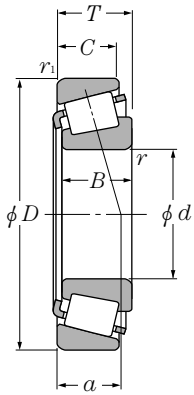

d 240～380mm

Boundary dimensions mm							Basic load ratings dynamic kN	static kN	dynamic kgf	static kgf	Bearing numbers
d	D	T	B	C	$r_{s\,min}$ ❶	$r_{ls\,min}$ ❶	C_r	C_{or}	C_r	C_{or}	
240	320	51	51	39	3	2.5	490	1,000	50,000	102,000	32948XUE1
	360	76	76	57	4	3	930	1,760	95,000	179,000	32048XU
	440	79	72	60	4	4	975	1,480	99,500	151,000	30248
	440	127	120	100	4	4	1,700	2,750	174,000	280,000	32248
	500	105	95	80	5	5	1,480	2,000	151,000	204,000	30348
	500	165	155	132	5	5	2,330	3,600	238,000	365,000	32348
260	360	63.5	63.5	48	3	2.5	705	1,430	72,000	146,000	32952XUE1
	400	87	87	65	5	4	1,200	2,270	123,000	231,000	32052XU
	480	89	80	67	5	5	1,170	1,810	119,000	185,000	30252
	480	137	130	106	5	5	1,880	3,350	192,000	340,000	32252
280	380	63.5	63.5	48	3	2.5	725	1,520	74,000	155,000	32956XUE1
	420	87	87	65	5	4	1,220	2,350	125,000	240,000	32056XU
	500	89	80	67	5	5	1,240	1,910	126,000	195,000	30256
	500	137	130	106	5	5	1,980	3,500	202,000	355,000	32256
	580	187	175	145	6	6	3,250	5,250	335,000	535,000	32356
300	420	76	76	57	4	3	1,010	2,090	103,000	213,000	32960XUE1
	460	100	100	74	5	4	1,490	2,830	152,000	289,000	32060XU
	540	96	85	71	5	5	1,420	2,220	145,000	226,000	30260
	540	149	140	115	5	5	2,300	4,100	235,000	420,000	32260
320	440	76	76	57	4	3	1,010	2,150	103,000	219,000	32964XUE1
	440	76	72	63	3	3	865	1,880	88,000	192,000	32964E1❷
	480	100	100	74	5	4	1,520	2,940	155,000	300,000	32064XU
	580	104	92	75	5	5	1,660	2,580	170,000	263,000	30264
	580	159	150	125	5	5	2,620	4,650	267,000	470,000	32264
340	460	76	76	57	4	3	1,040	2,270	106,000	232,000	32968XUE1
	460	76	72	63	3	3	910	1,980	93,000	201,000	32968E1❷
	520	112	106	90	5	5	1,650	3,150	169,000	320,000	32068
360	480	76	76	57	4	3	1,050	2,330	107,000	238,000	32972XUE1
	540	112	106	90	5	5	1,740	3,300	178,000	340,000	32072
380	520	87	82	72	4	4	1,140	2,500	116,000	255,000	32976
	560	112	106	90	5	5	1,920	3,800	196,000	390,000	32076

❶ Minimal allowable dimension for chamfer dimension r or r_1. ❷ This bearing does not incorporate the subunit dimensions.

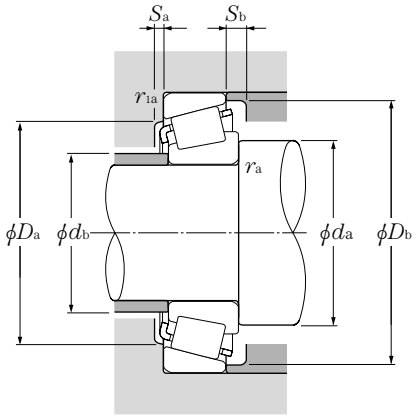

Equivalent bearing load

dynamic

$P_r = XF_r + YF_a$

$\frac{F_a}{F_r} \leqq e$		$\frac{F_a}{F_r} > e$	
X	Y	X	Y
1	0	0.4	Y_2

static

$P_{or} = 0.5F_r + Y_oF_a$

When $P_{or} < F_r$ use $P_{or} = F_r$

For values of e, Y_2 and Y_o see the table below.

Abutment and fillet dimensions mm									Load center mm	Constant	Axial load factors		Mass kg
d_a min	d_b max	D_a max	D_a min	D_b min	S_a min	S_b min	r_{as} max	r_{1as} max	a	e	Y_2	Y_o	(approx.)
254	254	308	290	311	10	12	2.5	2	65.5	0.46	1.31	0.72	10.9
258	261	346	318	346	12	19	3	2.5	78	0.46	1.31	0.72	26.8
258	290	422	368	408	3.9	19	3	3	91	0.49	1.23	0.68	47.7
258	277.5	422	365	421.5	4.1	27	3	3	107	0.43	1.39	0.77	78.8
262	301	478	417	456	8.1	25	4	4	94	0.37	1.60	0.88	87.2
262	291	478	402	467	1.5	33	4	4	120.5	0.37	1.60	0.88	141.9
274	279	348	325	347	11	15	2.5	2	69.5	0.41	1.48	0.81	18.8
282	287	382	352	383	14	22	4	3	85.5	0.43	1.38	0.76	39.4
282	312	458	396	438.5	4.2	22	4	4	99.5	0.49	1.23	0.68	63.4
282	302	458	385	453	2.9	31	4	4	121.5	0.49	1.23	0.68	103.6
294	298	368	344	368	11	15	2.5	2	75	0.43	1.39	0.76	20
302	305	402	370	402	14	22	4	3	90.5	0.46	1.31	0.72	41.8
302	331	478	422	464.5	5.9	22	4	4	102	0.49	1.23	0.68	66.6
302	318	478	405	473	6.4	31	4	4	123.5	0.49	1.23	0.68	110
308	340.5	552	469.5	540.5	3.4	42	5	5	137.5	0.37	1.60	0.88	222
318	324	406	379	405	13	19	3	2.5	80	0.39	1.52	0.84	31.4
322	329	442	404	439	15	26	4	3	98	0.43	1.38	0.76	57.2
322	356	518	453	498	4.9	25	4	4	111	0.49	1.23	0.68	84.3
322	345	518	438	511.5	2.6	34	4	4	135.5	0.49	1.23	0.68	138.7
338	344	426	398	426	13	19	3	2.5	85	0.42	1.44	0.79	33.1
338	344	426	398	425	13	13	3	2.5	85	0.39	1.55	0.85	33.2
342	344.5	462	418.5	463	15	26	4	3	104	0.46	1.31	0.72	60.2
342	379	558	485	531.5	4.7	29	4	4	118.5	0.47	1.27	0.70	103.9
342	369	558	473	551	3.9	34	4	4	142	0.47	1.27	0.70	172.1
358	362	446	417	446	13	19	3	2.5	90.5	0.44	1.37	0.75	34.9
358	362	446	414	445.5	13	13	3	2.5	87	0.39	1.55	0.85	36
362	374	498	452	496	3.5	22	4	4	103.5	0.37	1.60	0.88	78.7
378	381	466	436	466	13	19	3	2.5	96.5	0.46	1.31	0.72	36.6
382	393.5	518	476	519	5.5	22	4	4	106	0.37	1.60	0.88	83.7
398	408	502	464.5	503	4	15	3	3	101	0.40	1.49	0.82	51.3
402	412.5	538	495	539	6.5	22	4	4	109.5	0.37	1.60	0.88	89.3

Metric system sizes

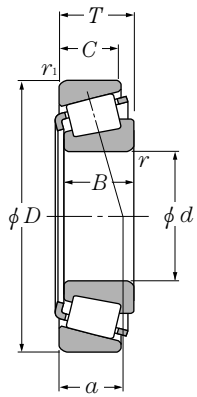

d 400～850mm

Boundary dimensions mm							Basic load ratings dynamic kN	static kN	dynamic kgf	static kgf	Bearing numbers
d	D	T	B	C	$r_{s\,min}$ ❶	$r_{ls\,min}$ ❶	C_r	C_{or}	C_r	C_{or}	
400	540	87	82	71	4	4	1,200	2,710	122,000	276,000	32980
	600	125	118	100	5	5	2,180	4,250	222,000	435,000	32080
420	560	87	82	71	4	4	1,230	2,840	125,000	290,000	32984
	620	125	118	100	6	5	2,280	4,550	233,000	465,000	32084
440	600	100	95	82	4	4	1,600	3,450	164,000	355,000	32988
	650	130	122	104	6	6	2,530	5,000	258,000	510,000	32088
500	640	87.36	82	72	4	4	1,330	3,300	141,000	335,000	CR-10010
	750	150	140	120	7.5	7.5	3,100	6,950	315,000	705,000	☆CR-10024
530	670	100	95	82	5	5	1,540	3,800	157,000	385,000	CR-10601
570	695	57	52	50	3	2.5	865	2,080	88,000	212,000	CR-11402
600	870	118	111	93	6	6	2,870	5,700	292,000	580,000	CR-12006
720	880	80	75	60	5	5	1,300	3,450	132,000	350,000	CR-14403
740	900	80	75	65	5	5	1,370	3,700	140,000	375,000	CR-14803
750	1,000	110	107	80	6	6	2,620	5,800	267,000	590,000	CR-15002
780	925	95	92	75	5	5	2,120	6,600	216,000	675,000	CR-15602
850	1,120	118	112	80	6	6	2,880	7,100	294,000	720,000	CR-17001

❶ Minimal allowable dimension for chamfer dimension r or r_1. ❷ This bearing does not incorporate the subunit dimensions.
Remarks: 1. Bearing numbers marked ☆ designate bearing with hollow rollers and pin type cages.

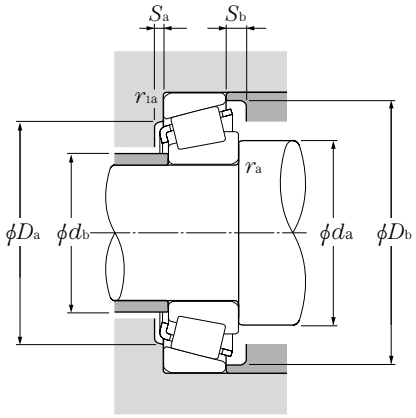

Equivalent bearing load

dynamic

$P_r = XF_r + YF_a$

$\frac{F_a}{F_r} \leqq e$		$\frac{F_a}{F_r} > e$	
X	Y	X	Y
1	0	0.4	Y_2

static

$P_{or} = 0.5F_r + Y_oF_a$

When $P_{or} < F_r$ use $P_{or} = F_r$

For values of e, Y_2 and Y_o see the table below.

Abutment and fillet dimensions mm									Load center mm	Constant	Axial load factors		Mass kg
d_a min	d_b max	D_a max	D_a min	D_b min	S_a min	S_b min	r_{as} max	r_{1as} max	a	e	Y_2	Y_o	(approx.)
418	427	522	482	521.5	4	16	3	3	106	0.42	1.43	0.79	54
422	434.5	578	526	575	5	25	4	4	119	0.37	1.60	0.88	115
438	445.5	542	501.5	543	3.5	16	3	3	111.5	0.44	1.37	0.76	56.6
422	455.5	598	549	598	6.5	25	4	4	120	0.37	1.60	0.88	121
458	472.5	582	543	580.5	3.5	18	3	3	106	0.35	1.70	0.93	76
468	475	622	576.5	627.5	5	26	5	5	127	0.37	1.60	0.88	136
518	523.5	622	584.5	627.5	3.5	15	3	3	125	0.45	1.34	0.74	64.3
536	566.5	714	658.5	722.5	1.5	30	6	6	154	0.41	1.48	0.81	224
552	552	648	616.5	653	1.5	18	4	4	111	0.33	1.80	0.99	76.2
584	598.5	683	652.5	675.5	5	7	2.5	2	102.5	0.36	1.67	0.92	41.7
628	656	842	782.5	828	1.5	25	5	5	147	0.37	1.60	0.88	208
742	757	858	818	853.5	5.5	20	4	4	158.5	0.46	1.31	0.72	94
762	775.5	878	839	877.5	5	15	4	4	159	0.46	1.31	0.72	96
778	801.5	972	915	954	7	30	5	5	155	0.37	1.60	0.88	210
802	810	903	873.5	907	9.5	20	4	4	137.5	0.33	1.80	0.99	115
878	920.5	1,092	1,026.5	1,063	8.5	38	5	5	154.5	0.33	1.80	0.99	276

Inch system sizes

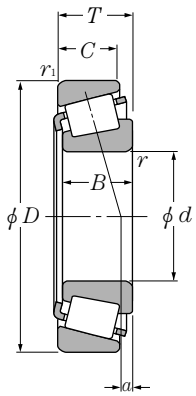

d 114.300～174.625mm

Boundary dimensions mm					Basic load ratings dynamic kN	static kN	dynamic kgf	static kgf
d	D	T	B	C	C_r	C_{or}	C_r	C_{or}
114.300	273.050	82.550	82.550	53.975	760	975	77,500	99,500
	279.400	82.550	82.550	53.975	760	975	77,500	99,500
120.650	273.050	82.550	82.550	53.975	760	975	77,500	99,500
127.000	295.275	82.550	87.312	57.150	880	1,190	89,500	122,000
	304.800	88.900	82.550	57.150	820	1,120	83,500	115,000
139.700	288.925	82.550	87.312	57.150	880	1,190	89,500	122,000
	295.275	82.550	87.312	57.150	880	1,190	89,500	122,000
	307.975	88.900	93.662	66.675	1,010	1,390	103,000	142,000
146.050	304.800	88.900	82.550	57.150	820	1,120	83,500	115,000
	311.150	88.900	82.550	57.150	820	1,120	83,500	115,000
152.400	307.975	88.900	93.662	61.912	880	1,310	89,500	133,000
	307.975	88.900	93.662	66.675	1,010	1,390	103,000	142,000
155.575	330.200	85.725	79.375	53.975	875	1,260	89,000	129,000
	342.900	85.725	79.375	53.975	875	1,260	89,000	129,000
158.750	304.800	66.675	69.106	42.862	540	780	55,000	79,500
160.325	288.925	63.500	63.500	47.625	680	1,070	69,000	109,000
161.925	374.650	87.312	79.375	60.325	845	1,140	86,500	117,000
165.100	288.925	63.500	63.500	47.625	550	950	56,000	97,000
	288.925	63.500	63.500	47.625	680	1,070	69,000	109,000
	311.150	82.550	82.550	65.088	925	1,480	94,500	151,000
	336.550	92.075	95.250	69.850	1,060	1,510	108,000	154,000
168.275	330.200	85.725	79.375	53.975	875	1,260	89,000	129,000
174.625	288.925	63.500	63.500	47.625	550	950	56,000	97,000
	288.925	63.500	63.500	47.625	680	1,070	69,000	109,000
	298.450	82.550	82.550	63.500	810	1,330	83,000	136,000
	311.150	82.550	82.550	63.500	810	1,330	83,000	136,000
	311.150	82.550	82.550	65.088	925	1,480	94,500	151,000

Remarks: 1. With regard to the chamfer dimensions on the back face of the inner and outer rings, installation dimensions r_{as} and r_{1as} are larger than the maximum value.

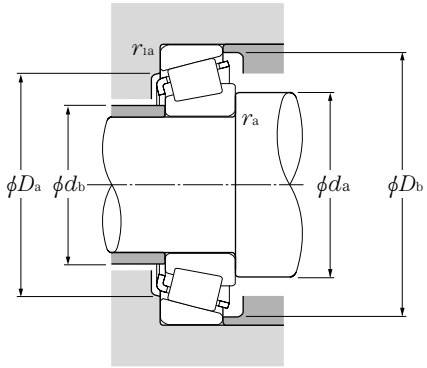

Equivalent bearing load

dynamic

$P_r = XF_r + YF_a$

$\frac{F_a}{F_r} \leqq e$		$\frac{F_a}{F_r} > e$	
X	Y	X	Y
1	0	0.4	Y_2

static

$P_{or} = 0.5F_r + Y_oF_a$

When $P_{or} < F_r$ use $P_{or} = F_r$

For values of e, Y_2 and Y_o see the table below.

Bearing numbers	Abutment and fillet dimensions mm						Load❶ center mm	Constant	Axial load factors		Mass kg
	d_a	d_b	D_a	D_b	r_{as} max	r_{1as} max	a	e	Y_2	Y_o	(approx.)
T-HH926744/HH926710	164	147	230	253	6.4	6.4	6.6	0.63	0.95	0.52	22.2
T-HH926744/HH926716	164	147	233	253	6.4	6.4	6.6	0.63	0.95	0.52	23.5
T-HH926749/HH926710	168	147	230	253	6.4	6.4	6.6	0.63	0.95	0.52	21.7
T-HH231637/HH231615	174	150	258	264	13.5	6.4	26.7	0.32	1.88	1.04	27.1
T-HH932132/HH932110	182	172	260	288	6.4	6.4	−1.9	0.73	0.82	0.45	32.8
T-HH231649/HH231610	177	161	255	264	9.7	6.4	26.7	0.32	1.88	1.04	24.4
T-HH231649/HH231615	177	161	258	264	9.7	6.4	26.7	0.32	1.88	1.04	25.8
T-HH234031/HH234010	180	168	276.1	285.5	9.7	6.8	26.7	0.33	1.84	1.01	30.9
T-HH932145/HH932110	195	174	260	288	6.4	6.4	−1.9	0.73	0.82	0.45	30.6
T-HH932145/HH932115	195	174	262	288	6.4	6.4	−1.9	0.73	0.82	0.45	32.2
T-EE450601/451212	189	177	269	275	9.7	6.8	28.2	0.33	1.84	1.01	29.4
T-HH234048/HH234010	191	179	276	285	9.7	6.8	26.4	0.33	1.84	1.01	29.4
T-H936340/H936310	209	193	282	311	6.4	6.4	−16.9	0.81	0.74	0.41	34.9
T-H936340/H936316	209	193	287	311	6.4	6.4	−16.9	0.81	0.74	0.41	38.4
EE280626/281200	192	180	279	282	6.4	3.3	12.5	0.36	1.67	0.92	20.8
T-HM237532/HM237510	192	181	266	271	7	3.3	11.6	0.32	1.88	1.04	16.0
EE117063/117148	207	197	322	341	6.4	3.3	−11.5	0.71	0.85	0.47	47.9
T-94649/94113	197	186	259	272	7	3.3	0.9	0.47	1.28	0.70	17.1
T-HM237535/HM237510	195	184	266	271	7	3.3	11.6	0.32	1.88	1.04	15.6
T-H238140/H238110	198	188	280	289	6.4	6.4	18.8	0.33	1.81	1.00	27.5
T-HH437549/HH437510	196	196	297	308	3.3	6.4	21.4	0.37	1.62	0.89	36.6
T-H936349/H936310	218	193	282	311.4	6.4	6.4	−16.9	0.81	0.74	0.41	33.2
T-94687/94113	204	193	259	272	7	3.3	0.9	0.47	1.28	0.70	14.7
T-HM237542/HM237510	202	191	266	271	7	3.3	11.6	0.32	1.88	1.04	14.7
T-EE219068/219117	204	193	269	282	6.4	6.4	15.3	0.38	1.59	0.87	21.1
T-EE219068/219122	204	193	275	282	6.4	6.4	15.3	0.38	1.59	0.87	23.9
T-H238148/H238110	205	195	280	289	6.4	6.4	18.8	0.33	1.81	1.00	23.9

❶ "−" means that load center at outside on end of inner ring.

Inch system sizes

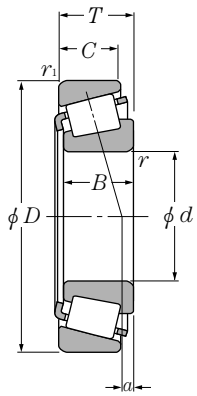

d 177.800～206.375mm

Boundary dimensions mm					Basic load ratings dynamic kN	static kN	dynamic kgf	static kgf
d	D	T	B	C	C_r	C_{or}	C_r	C_{or}
177.800	288.925	63.500	63.500	47.625	550	950	56,000	97,000
	288.925	63.500	63.500	47.625	680	1,070	69,000	109,000
	※289.974	63.500	63.500	48.000	680	1,070	69,000	109,000
	319.964	88.900	85.725	65.088	930	1,400	94,500	142,000
	428.625	106.362	95.250	61.912	1,190	1,610	122,000	165,000
※179.975	317.500	63.500	63.500	46.038	615	1,160	63,000	118,000
187.325	282.575	50.800	47.625	36.512	365	615	37,000	63,000
	319.964	88.900	85.725	65.088	925	1,400	94,500	142,000
	320.675	88.900	85.725	65.088	925	1,400	94,500	142,000
190.500	282.575	50.800	47.625	36.512	365	615	37,000	63,000
	317.500	63.500	63.500	46.038	615	1,160	63,000	118,000
	336.550	98.425	95.250	73.025	1,030	1,830	105,000	187,000
	365.049	92.075	88.897	63.500	975	1,600	99,500	164,000
	428.625	106.362	95.250	61.912	1,190	1,610	122,000	165,000
193.675	282.575	50.800	47.625	36.512	365	615	37,000	63,000
200.025	292.100	57.945	57.945	46.038	535	1,030	54,500	105,000
	317.500	63.500	63.500	46.038	615	1,160	63,000	118,000
	384.175	112.712	112.712	90.488	1,460	2,730	149,000	279,000
	393.700	111.125	111.125	84.138	1,340	2,020	137,000	206,000
203.200	276.225	42.862	42.862	34.133	340	690	35,000	70,500
	282.575	46.038	46.038	36.512	360	785	37,000	80,000
	292.100	57.945	57.945	46.038	535	1,030	54,500	105,000
	317.500	63.500	63.500	46.038	615	1,160	63,000	118,000
	346.075	79.375	80.962	60.325	900	1,460	92,000	149,000
	365.049	92.075	88.897	63.500	975	1,600	99,500	164,000
	406.400	92.075	85.725	57.150	960	1,480	98,000	151,000
	482.600	117.475	95.250	73.025	1,310	1,860	134,000	190,000
204.788	292.100	57.945	57.945	46.038	535	1,030	54,500	105,000
206.375	282.575	46.038	46.038	36.512	360	785	37,000	80,000
	336.550	98.425	100.012	77.788	1,110	2,030	113,000	207,000
	482.600	117.475	95.250	73.025	1,310	1,860	134,000	190,000

Remarks: 1. With regard to the chamfer dimensions on the back face of the inner and outer rings, installation dimensions r_{as} and r_{1as} are larger than the maximum value.
2. Bearing numbers marked "☆" designate bearing with hollow rollers and pin type cages.

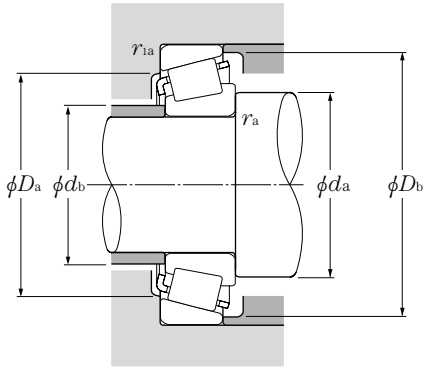

Equivalent bearing load

dynamic

$P_r = XF_r + YF_a$

$\frac{F_a}{F_r} \leqq e$		$\frac{F_a}{F_r} > e$	
X	Y	X	Y
1	0	0.4	Y_2

static

$P_{or} = 0.5F_r + Y_oF_a$

When $P_{or} < F_r$ use $P_{or} = F_r$

For values of e, Y_2 and Y_o see the table below.

Bearing numbers	Abutment and fillet dimensions mm						Load❶ center mm	Constant	Axial load factors		Mass kg
	d_a	d_b	D_a	D_b	r_{as} max	r_{1as} max	a	e	Y_2	Y_o	(approx.)
T-94700/94113	207	195	259	272	7	3.3	0.9	0.47	1.28	0.70	14.4
T-HM237545/HM237510	205	194	266	271	7	3.3	11.6	0.32	1.88	1.04	14.4
T-HM237545/HM237513	205	194	267	272	7	3	11.6	0.32	1.88	1.04	14.6
T-H239640/H239610	202	198	293	301	3.5	4.8	22.3	0.32	1.88	1.04	30.2
EE350701/351687	230	221	365	383	6.4	6.4	–13.8	0.76	0.79	0.43	77.7
T-93708/93125	209	204	286	300	3.5	3.3	–7.9	0.52	1.15	0.63	19.0
T-87737/87111	207	201	261	267	3.5	3.3	–3.8	0.42	1.44	0.79	10.9
T-H239649/H239610	214	205	293	301	5.5	4.8	22.3	0.32	1.88	1.04	28.7
T-H239649/H239612	214	205	293	301	5.5	4.8	22.3	0.32	1.88	1.04	28.9
T-87750/87111	209	203	261	267	3.5	3.3	–3.8	0.42	1.44	0.79	10.6
T-93750/93125	218	212	286	300	4.3	3.3	–7.9	0.52	1.15	0.63	17.9
T-HH840249/HH840210	234	216	290	318	6.4	6.4	5.4	0.58	1.04	0.57	36.4
T-EE420751/421437	227	218	329	334	6.4	3.3	15.4	0.40	1.49	0.82	42.9
EE350750/351687	240	237	365	383	6.4	6.4	–13.9	0.76	0.79	0.43	75.3
T-87762/87111	211	206	261	267	3.5	3.3	–3.8	0.42	1.44	0.79	10.3
T-M241543/M241510	219	215	272	279	3.5	3.3	4.7	0.33	1.80	0.99	11.5
T-93787/93125	225	219	286	300	4.3	3.3	–7.9	0.52	1.15	0.63	18.3
T-H247535/H247510	241	231	346	362	6.4	6.4	28.1	0.33	1.80	0.99	53.0
HH144642/HH144614	235	226	352	357	6.4	6.4	35.1	0.30	2.01	1.11	55.9
LM241149/LM241110	220	214.1	260	267	3.5	3.3	–2.1	0.32	1.88	1.04	6.56
T-67983/67920	222	216	260	275	3.5	3.3	–15.9	0.51	1.18	0.65	7.76
T-M241547/M241510	221	217	272	279	3.5	3.3	4.7	0.33	1.80	0.99	11.2
T-93800/93125	227	222	286	300	4.3	3.3	–7.9	0.52	1.15	0.63	16.5
T-HM542948/HM542911	224	224	315	322	1.5	3.3	9	0.39	1.55	0.85	28.8
T-EE420801/421437	230	227	329	334.4	3.3	3.3	15.4	0.40	1.49	0.82	40.7
EE114080/114160	246	237	349	374	6.4	6.4	–27.9	0.80	0.75	0.41	54.8
☆T-EE380080/380190G2	262	256	402	428	6.4	6.4	–34.3	0.87	0.69	0.38	108
T-M241549/M241510	223	219	272	279	3.5	3.3	4.7	0.33	1.80	0.99	11.0
T-67985/67920	224	219	260	275	3.5	3.3	–15.9	0.51	1.18	0.65	8.4
T-H242649/H242610	231	227	306	318	3.3	3.3	25.4	0.33	1.80	0.99	32.1
☆T-EE380081/380190G2	264	258	402	428	6.4	6.4	–34.3	0.87	0.69	0.38	107

❶ "—" means that load center at outside on end of inner ring.

Inch system sizes

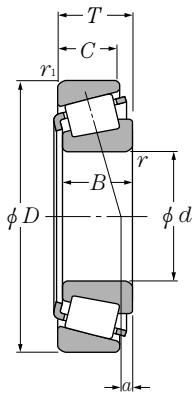

d 209.550～237.330mm

Boundary dimensions mm					Basic load ratings dynamic kN	static kN	dynamic kgf	static kgf
d	D	T	B	C	C_r	C_{or}	C_r	C_{or}
209.550	282.575	46.038	46.038	36.512	360	785	37,000	80,000
	317.500	63.500	63.500	46.038	615	1,160	63,000	118,000
212.725	285.750	46.038	46.038	34.925	380	820	38,500	83,500
215.900	285.750	46.038	46.038	34.925	380	820	38,500	83,500
	290.010	31.750	31.750	22.225	206	405	21,100	41,000
216.408	285.750	46.038	49.212	34.925	380	820	38,500	83,500
220.662	314.325	61.912	61.912	49.212	625	1,220	63,500	125,000
228.397	431.800	92.075	85.725	49.212	855	1,240	87,000	126,000
228.460	431.800	92.075	85.725	49.212	855	1,240	87,000	126,000
228.600	300.038	33.338	31.750	23.812	215	435	22,000	44,500
	327.025	52.388	52.388	36.512	475	950	48,500	97,000
	355.600	68.262	66.675	47.625	640	1,270	65,500	130,000
	355.600	69.850	69.850	49.212	715	1,260	73,000	128,000
	355.600	69.850	69.850	50.800	720	1,240	73,500	127,000
	358.775	71.438	71.438	53.975	815	1,640	83,000	168,000
	400.050	88.900	87.312	63.500	945	1,620	96,500	166,000
	488.950	123.825	111.125	73.025	1,570	2,260	161,000	231,000
231.775	300.038	33.338	31.750	23.812	215	435	22,000	44,500
	336.550	65.088	65.088	50.800	710	1,410	72,500	144,000
	358.775	71.438	71.438	53.975	815	1,640	83,000	168,000
234.950	311.150	46.038	46.038	33.338	405	820	41,500	83,500
	314.325	49.212	49.212	36.512	470	935	48,000	95,500
	327.025	52.388	52.388	36.512	475	950	48,500	97,000
	355.600	68.262	66.675	47.625	640	1,270	65,500	130,000
	381.000	74.612	74.612	57.150	885	1,790	90,500	183,000
	384.175	112.712	112.712	90.488	1,460	2,730	149,000	279,000
237.330	336.550	65.088	65.088	50.800	710	1,410	72,500	144,000
	358.775	71.438	71.438	53.975	815	1,640	83,000	168,000

Remarks: 1. With regard to the chamfer dimensions on the back face of the inner and outer rings, installation dimensions r_{as} and r_{1as} are larger than the maximum value.
2. Bearing numbers marked "☆" designate bearing with hollow rollers and pin type cages.

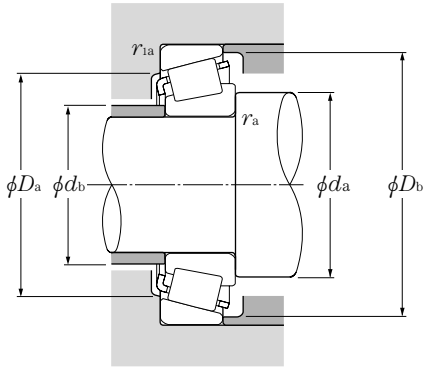

Equivalent bearing load

dynamic

$P_r = XF_r + YF_a$

$\frac{F_a}{F_r} \leqq e$		$\frac{F_a}{F_r} > e$	
X	Y	X	Y
1	0	0.4	Y_2

static

$P_{or} = 0.5F_r + Y_oF_a$

When $P_{or} < F_r$ use $P_{or} = F_r$

For values of e, Y_2 and Y_o see the table below.

Bearing numbers	Abutment and fillet dimensions mm						Load❶ center mm	Constant	Axial load factors		Mass kg
	d_a	d_b	D_a	D_b	r_{as} max	r_{1as} max	a	e	Y_2	Y_o	(approx.)
T-67989/67920	227	221	260	275	3.5	3.3	−15.9	0.51	1.18	0.65	7.23
T-93825/93125	233	227	286	300	4.3	3.3	−7.9	0.52	1.15	0.63	15.8
T-LM742745/LM742710	230	225	266	279	3.5	3.3	−14.2	0.48	1.25	0.69	7.33
T-LM742749/LM742710	233	227	266	279	3.5	3.3	−14.2	0.48	1.25	0.69	7.05
543085/543114	232	226	272	276	3.5	3.3	−12.5	0.38	1.58	0.87	5.20
T-LM742747/LM742710	233	227	266	279	3.5	3.3	−14.2	0.48	1.25	0.69	7.40
T-M244249/M244210	245	235	293	300	6.4	3.3	4.4	0.33	1.80	0.99	13.6
EE113089/113170	274	267	375	397	6.4	6.4	−40.3	0.88	0.68	0.37	59.4
EE113091/113170	274	267	375	397	6.4	6.4	−40.3	0.88	0.68	0.37	59.4
T-544090/544118	244	240	282	287	3.5	3.3	−15.8	0.40	1.49	0.82	6.05
T-8573/8520	255	244	305	313	6.4	3.3	−7.8	0.41	1.48	0.81	12.5
T-96900/96140	260	249	318	334	7	3.3	−16.9	0.59	1.02	0.56	24.3
T-EE130902/131400	257	247	329	330	6.8	1.5	9.9	0.33	1.82	1.00	22.7
HM746646/HM746610	258	248	324	338.7	6.4	6.4	−6	0.47	1.27	0.70	22.7
T-M249732/M249710	256	251	335	343	3.5	3.3	6.9	0.33	1.80	0.99	23.9
EE430900/431575	271	253	360	364	10.5	3.3	2.8	0.44	1.36	0.75	46.0
☆T-HH949549/HH949510G2	297	280	416	456	6.4	6.4	−39.9	0.94	0.64	0.35	111
T-544091/544118	247	243	282	287	3.5	3.3	−15.8	0.40	1.49	0.82	5.81
T-M246942/M246910	258	249	313	322	6.4	3.3	4.7	0.33	1.80	0.99	16.9
T-M249734/M249710	263	254	335	343	6.4	3.3	6.9	0.33	1.80	0.99	23.4
LM446349/LM446310	252	246	294	301	3.5	3.3	−6.6	0.36	1.66	0.91	8.38
T-LM545849/LM545810	252	246	296	306	3.5	3.3	−8.4	0.40	1.51	0.83	9.38
T-8575/8520	259	248	305	313	6.4	3.3	−7.8	0.41	1.48	0.81	11.9
T-96925/96140	265	254	318	334	7	3.3	−16.9	0.59	1.02	0.56	22.5
T-M252330/M252310	271	261	356	364	6.4	3.3	6.2	0.33	1.80	0.99	29.3
T-H247549/H247510	269	259	346	362	6.4	6.4	28.1	0.33	1.80	0.99	45.5
T-M246949/M246910	262	253	313	322	6.4	3.3	4.7	0.33	1.80	0.99	16.2
T-M249736/M249710	267	258	335	343	6.4	3.3	6.9	0.33	1.80	0.99	22.6

❶ "−" means that load center at outside on end of inner ring.

Inch system sizes

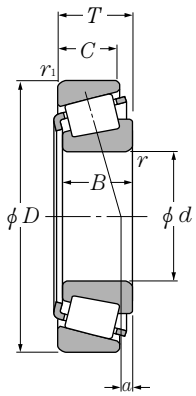

d 241.300～266.700mm

Boundary dimensions mm					Basic load ratings dynamic kN	static kN	dynamic kgf	static kgf
d	D	T	B	C	C_r	C_{or}	C_r	C_{or}
241.300	327.025	52.388	52.388	36.512	475	950	48,500	97,000
	349.148	57.150	57.150	44.450	550	1,000	56,000	103,000
	368.300	50.800	50.800	33.338	460	810	47,000	83,000
	393.700	73.817	69.850	50.005	780	1,400	79,500	143,000
	444.500	101.600	100.012	76.200	1,390	2,120	142,000	216,000
244.475	381.000	79.375	76.200	57.150	755	1,440	77,000	147,000
247.650	346.075	63.500	63.500	50.800	720	1,450	73,500	148,000
	368.300	50.800	50.800	33.338	460	815	47,000	83,000
	381.000	74.612	74.612	57.150	885	1,790	90,500	183,000
	406.400	115.888	117.475	93.662	1,650	3,000	168,000	305,000
249.250	381.000	79.375	76.200	57.150	755	1,440	77,000	147,000
254.000	323.850	22.225	22.225	15.875	126	315	12,800	32,500
	358.775	71.438	71.438	53.975	815	1,640	83,000	168,000
	365.125	58.738	58.738	42.862	615	1,190	62,500	122,000
	393.700	73.817	69.850	50.005	780	1,400	79,500	143,000
	422.275	86.121	79.771	66.675	1,160	1,800	119,000	184,000
	533.400	133.350	120.650	77.788	1,680	2,610	171,000	266,000
257.175	342.900	57.150	57.150	44.450	580	1,270	59,000	130,000
	342.900	57.150	57.150	44.450	580	1,270	59,000	130,000
260.350	365.125	58.738	58.738	42.862	615	1,190	62,500	122,000
	400.050	69.850	67.470	46.038	710	1,230	72,500	126,000
	419.100	85.725	84.138	61.912	925	1,610	94,000	165,000
	422.275	86.121	79.771	66.675	1,160	1,800	119,000	184,000
	488.950	120.650	120.650	92.075	1,760	2,970	180,000	305,000
263.525	325.438	28.575	28.575	25.400	211	520	21,600	53,000
	355.600	57.150	57.150	44.450	625	1,330	64,000	136,000
266.700	323.850	22.225	22.225	15.875	126	315	12,800	32,500
	325.438	28.575	28.575	25.400	211	520	21,600	53,000
	355.600	57.150	57.150	44.450	625	1,340	54,000	136,000
	355.600	57.150	57.150	44.450	500	995	51,000	101,000
	393.700	73.817	69.850	50.005	780	1,400	79,500	143,000

Remarks: 1. With regard to the chamfer dimensions on the back face of the inner and outer rings, installation dimensions r_{as} and r_{1as} are larger than the maximum value.
2. Bearing numbers marked "☆" designate bearing with hollow rollers and pin type cages.

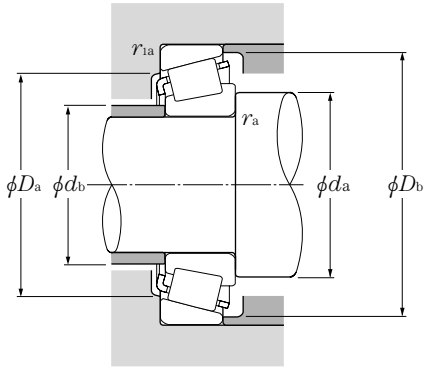

Equivalent bearing load

dynamic

$P_r = XF_r + YF_a$

$\frac{F_a}{F_r} \leqq e$		$\frac{F_a}{F_r} > e$	
X	Y	X	Y
1	0	0.4	Y_2

static

$P_{or} = 0.5F_r + Y_oF_a$

When $P_{or} < F_r$ use $P_{or} = F_r$

For values of e, Y_2 and Y_o see the table below.

Bearing numbers	Abutment and fillet dimensions mm						Load❶ center mm	Constant	Axial load factors		Mass kg
	d_a	d_b	D_a	D_b	r_{as} max	r_{1as} max	a	e	Y_2	Y_o	(approx.)
T-8578/8520	264	253	305	313	6.4	3.3	–7.8	0.41	1.48	0.81	11.2
EE127095/127135	267	257	325	329	6.4	3.3	–3.2	0.35	1.70	0.93	15.9
EE170950/171450	269	260	340	337	6.4	3.3	–6.2	0.36	1.65	0.90	17.2
T-EE275095/275155	278	268	366	378	6.4	6.4	–2.5	0.40	1.49	0.82	34.3
☆T-EE923095/923175G2	277	268	403	407	6.4	4.8	19.3	0.34	1.78	0.98	68.0
EE126097/126150	275	266	343	358	6.4	4.8	–8	0.52	1.16	0.64	32.6
T-M348449/M348410	273	263	321	332	6.4	6.4	1.3	0.34	1.75	0.96	16.2
EE170975/171450	274	264	340	337	6.4	3.3	–6.2	0.36	1.65	0.90	16.5
T-M252337/M252310	280	271	356	364	6.4	3.3	6.2	0.33	1.80	0.99	27.3
HH249949/HH249910	284	275	366	383	6.4	6.4	28.9	0.33	1.80	0.99	55.6
EE126098/126150	279	269	343	358	6.4	4.8	–8	0.52	1.16	0.64	31.7
29875/29820	267	266	310	312	1.5	1.5	–21.1	0.35	1.73	0.95	3.92
T-M249749/M249710	274	270	335	343	3.5	3.3	–6.9	0.33	1.80	0.99	20.1
T-EE134100/134143	281	272	339	347	6.4	6.4	–5	0.37	1.60	0.88	17.7
T-EE275100/275155	287	277	366	378	6.4	6.4	–2.5	0.40	1.49	0.82	32.1
T-HM252343/HM252310	287	281	392	400	6.8	3.3	9.3	0.33	1.80	0.99	47.1
HH953749/HH953710	328	306.3	455	496	6.4	6.4	–44.7	0.94	0.64	0.35	141
M349549/M349510	281	269	322	333	6.4	3.3	–2.5	0.35	1.73	0.95	12.9
M349549A/M349510	289	269	322	333	10.7	3.3	–2.5	0.35	1.73	0.95	12.9
T-EE134102/134143	286	276	339	347	6.4	6.4	–5	0.37	1.60	0.88	16.8
EE221026/221575	296	280	366	372	9.7	6.4	–1.8	0.39	1.52	0.84	27.0
EE435102/435165	295	285	376	395	6.4	3.3	–20.7	0.61	0.99	0.54	44.4
T-HM252348/HM252310	292	285	392	400	6.8	3.3	9.3	0.33	1.80	0.99	45.7
EE295102/295193	299	290	444	451	6.4	6.4	28.7	0.31	1.92	1.06	90.3
T-38880/38820	275	275	312	315	1.5	1.5	–20.5	0.37	1.64	0.90	4.56
T-LM451345/LM451310	283	279	335	343	3.5	3.3	–4.7	0.36	1.67	0.92	14.2
29880/29820	277	275	310	312	1.5	1.5	–21.1	0.35	1.73	0.95	3.28
T-38885/38820	277	277	312	315	1.5	1.5	–20.5	0.37	1.64	0.90	4.35
T-LM451349/LM451310	285	281	335	343	3.5	3.3	–4.7	0.36	1.67	0.92	15.0
T-LM451349A/LM451310	299	281	335	343	10.5	3.3	–4.7	0.36	1.67	0.92	13.8
T-EE275105/275155	296	287	366	378	6.4	6.4	–2.5	0.40	1.49	0.82	29.7

❶ "—" means that load center at outside on end of inner ring.

Inch system sizes

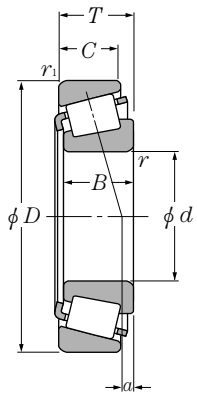

d 266.700～304.800mm

Boundary dimensions mm					Basic load ratings dynamic kN	static kN	dynamic kgf	static kgf
d	D	T	B	C	C_r	C_{or}	C_r	C_{or}
266.700	444.500	120.650	117.475	88.900	1,570	3,050	160,000	310,000
269.875	381.000	74.612	74.612	57.150	885	1,790	90,500	183,000
273.050	393.700	73.817	69.850	50.005	780	1,400	79,500	143,000
276.225	352.425	36.512	34.925	23.812	295	605	30,000	61,500
279.400	374.650	47.625	47.625	34.925	470	1,010	48,000	103,000
	469.900	95.250	93.662	69.850	1,180	2,170	121,000	222,000
	488.950	120.650	120.650	92.075	1,760	2,970	180,000	305,000
279.982	380.898	65.088	65.088	49.212	660	1,550	67,500	159,000
280.000	406.400	69.850	67.673	53.975	760	1,550	77,500	158,000
280.192	406.400	69.850	67.673	53.975	760	1,550	77,500	158,000
285.750	358.775	33.338	31.750	22.225	263	540	26,900	55,000
	380.898	65.088	65.088	49.212	660	1,550	67,500	159,000
288.925	406.400	77.788	77.788	60.325	1,010	2,080	103,000	212,000
292.100	374.650	47.625	47.625	34.925	470	1,010	48,000	103,000
	469.900	95.250	93.662	69.850	1,180	2,170	121,000	222,000
	558.800	136.525	136.525	98.425	1,950	3,800	199,000	385,000
298.450	444.500	63.500	61.912	39.688	630	1,150	64,000	117,000
※299.974	495.300	141.288	141.288	114.300	2,440	4,900	249,000	500,000
300.038	422.275	82.550	82.550	63.500	1,130	2,400	116,000	245,000
304.800	393.700	50.800	50.800	38.100	485	1,030	49,500	105,000
	406.400	63.500	63.500	47.625	700	1,580	71,500	161,000
	438.048	76.200	76.992	53.975	805	1,590	82,000	163,000
	444.500	63.500	61.912	39.688	630	1,150	64,000	117,000
	495.300	76.200	74.612	53.975	1,140	1,940	116,000	198,000
	495.300	95.250	92.075	69.850	1,230	2,350	126,000	240,000

Remarks: 1. With regard to the chamfer dimensions on the back face of the inner and outer rings, installation dimensions r_{as} and r_{1as} are larger than the maximum value.
2. Bearing numbers marked "☆" designate bearing with hollow rollers and pin type cages.

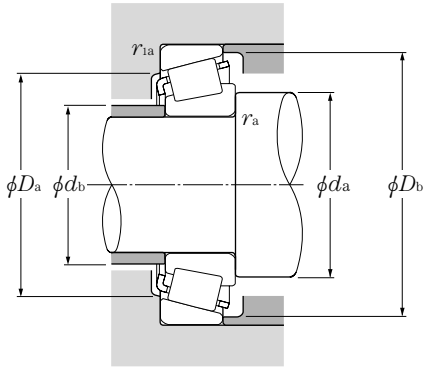

Equivalent bearing load

dynamic

$P_r = XF_r + YF_a$

$\frac{F_a}{F_r} \leqq e$		$\frac{F_a}{F_r} > e$	
X	Y	X	Y
1	0	0.4	Y_2

static

$P_{or} = 0.5F_r + Y_oF_a$

When $P_{or} < F_r$ use $P_{or} = F_r$

For values of e, Y_2 and Y_o see the table below.

Bearing numbers	Abutment and fillet dimensions mm						Load❶ center mm	Constant	Axial load factors		Mass kg
	d_a	d_b	D_a	D_b	r_{as} max	r_{1as} max	a	e	Y_2	Y_o	(approx.)
H852849/H852810	315	297	390	422	6.4	0.6	0.3	0.58	1.04	0.57	73.3
T-M252349/M252310	296	287	356	364	6.4	3.3	6.2	0.33	1.80	0.99	25.4
T-EE275108/275155	301	291	366	378	6.4	6.4	–2.5	0.40	1.49	0.82	28.5
L853049/L853010	293	288	332	342	3.5	3.3	–34.8	0.54	1.12	0.62	8.40
L555233/L555210	300	296	355	362	3.5	3.3	–17	0.40	1.49	0.82	13.0
EE722110/722185	321	314	430	433	9.7	3.3	6.3	0.38	1.58	0.87	65.3
EE295110/295193	303	304	444	451	1.3	6.4	28.7	0.31	1.92	1.06	84.9
T-LM654642/LM654610	302	298	356	368	3.5	3.3	–11.5	0.43	1.39	0.76	19.0
EE128112/128160	308	307	378	384	6.4	3.3	–4.4	0.39	1.56	0.86	29.1
EE128111/128160	309	307	378	384	6.8	3.3	–4.4	0.39	1.56	0.86	29.1
545112/545141A	302	298	340	345	3.5	3.3	–33.9	0.49	1.22	0.67	7.54
T-LM654649/LM654610	306	302	356	368	3.5	3.3	–11.5	0.43	1.39	0.76	18.0
M255449/M255410A	316	310	379	388	6.4	3.3	4.1	0.34	1.78	0.98	27.8
L555249/L555210	309	305	355	362	3.5	3.3	–17	0.40	1.49	0.82	11.5
EE722115/722185	330	324	430	433	9.7	3.3	6.3	0.38	1.58	0.87	62.0
EE790114/790221	335	329	501	513	6.4	6.4	23.8	0.39	1.52	0.84	135
EE291175/291750	332	320	416	415	8	1.5	–9.1	0.38	1.58	0.87	33.1
☆HH258248/HH258210G2	342	332	448	467	6.4	6.4	35.4	0.33	1.80	0.99	96.0
☆T-HM256849/HM256810G2	328	319	394	403	6.4	3.3	5.7	0.34	1.78	0.98	31.9
L357049/L357010	329	319	374	380	6.4	3.3	–12.5	0.36	1.67	0.92	13.8
T-LM757049/LM757010	331	322	380	393	6.4	3.3	–16.3	0.44	1.36	0.75	20.1
T-EE129120X/129172	334	328	406	411	6.4	4.8	–7.3	0.42	1.44	0.79	34.8
EE291201/291750	337	324	416	415	8	1.5	–9.1	0.38	1.58	0.87	31.9
EE941205/941950A	339	329	459	463	6.4	3.3	–10	0.40	1.49	0.82	55.8
EE724120/724195	359	330	450	459	16	6.4	0.9	0.40	1.49	0.82	69.7

❶ "—" means that load center at outside on end of inner ring.

Inch system sizes

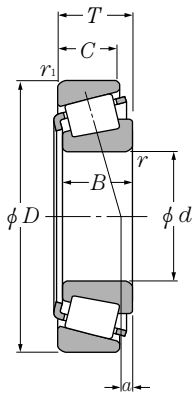

d 304.800～381.000mm

Boundary dimensions mm					Basic load ratings dynamic kN	static kN	dynamic kgf	static kgf
d	D	T	B	C	C_r	C_{or}	C_r	C_{or}
304.800	558.800	136.525	136.525	98.425	1,950	3,800	199,000	385,000
317.500	444.500	63.500	61.912	39.688	630	1,150	64,000	117,000
	447.675	85.725	85.725	68.262	1,160	2,390	118,000	244,000
	622.300	147.638	131.762	82.550	2,080	3,550	212,000	365,000
330.200	415.925	47.625	47.625	34.925	445	1,060	45,000	108,000
	415.925	47.625	47.625	34.925	445	1,060	45,000	108,000
	482.600	60.325	55.562	38.100	700	1,430	71,500	146,000
	482.600	85.725	80.167	60.325	955	1,970	97,500	201,000
333.375	469.900	90.488	90.488	71.438	1,350	2,760	138,000	282,000
342.900	450.850	66.675	66.675	52.388	785	1,780	80,000	182,000
	457.098	68.262	63.500	47.625	705	1,640	72,000	167,000
	533.400	76.200	76.200	50.800	1,070	1,730	109,000	176,000
346.075	482.600	60.325	55.562	38.100	700	1,430	71,500	146,000
	488.950	95.249	95.250	74.612	1,420	3,000	145,000	305,000
	488.950	95.250	95.250	74.612	1,480	3,200	151,000	325,000
349.250	501.650	90.488	84.138	69.850	1,190	2,280	122,000	233,000
355.600	444.500	60.325	60.325	47.625	655	1,740	67,000	177,000
	469.900	60.325	55.562	38.100	700	1,430	71,500	146,000
	482.600	60.325	55.562	38.100	700	1,430	71,500	146,000
	501.650	74.612	66.675	50.800	900	1,830	92,000	187,000
	501.650	90.488	84.138	69.850	1,190	2,280	122,000	233,000
361.950	406.400	23.812	23.812	17.462	173	470	17,600	48,000
368.249	523.875	101.600	101.600	79.375	1,520	3,250	155,000	335,000
371.475	501.650	74.612	66.675	50.800	900	1,830	92,000	187,000
374.650	522.288	85.725	84.138	61.912	1,060	2,270	108,000	232,000
381.000	479.425	49.212	47.625	34.925	540	1,270	55,500	130,000
	508.000	63.500	58.738	38.100	540	1,130	55,000	116,000

Remarks: 1. With regard to the chamfer dimensions on the back face of the inner and outer rings, installation dimensions r_{as} and r_{1as} are larger than the maximum value.
2. Bearing numbers marked "☆" designate bearing with hollow rollers and pin type cages.

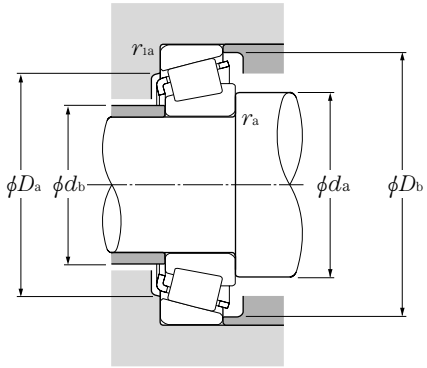

Equivalent bearing load

dynamic

$P_r = XF_r + YF_a$

$\frac{F_a}{F_r} \leqq e$		$\frac{F_a}{F_r} > e$	
X	Y	X	Y
1	0	0.4	Y_2

static

$P_{or} = 0.5F_r + Y_oF_a$

When $P_{or} < F_r$ use $P_{or} = F_r$

For values of e, Y_2 and Y_o see the table below.

Bearing numbers	Abutment and fillet dimensions mm						Load❶ center mm	Constant	Axial load factors		Mass kg
	d_a	d_b	D_a	D_b	r_{as} max	r_{1as} max	a	e	Y_2	Y_o	(approx.)
EE790120/790221	335	335	501	513	1.3	6.4	23.8	0.39	1.52	0.84	131
EE291250/291750	346	334	416	415	8	1.5	–9.1	0.38	1.58	0.87	29.5
T-HM259048/HM259010	341	337	418	428	3.5	3.3	4.8	0.33	1.79	0.99	37.3
☆H961649/H961610G2	410	373	531	582	14.3	12.7	–60.7	0.95	0.63	0.35	203
T-L860048/L860010	367	345	394	402	12.7	3.3	–35.4	0.50	1.20	0.66	13.3
T-L860049/L860010	349	345	394	402	3.5	3.3	–35.4	0.50	1.20	0.66	13.3
T-EE161300/161900	367	356	451	455	7	6.4	–33.6	0.50	1.20	0.66	35.9
EE526130/526190	360	351	449	454	6.4	3.3	–2.8	0.39	1.53	0.84	51.0
HM261049/HM261010A	363	357	439	449	6.4	3.3	5.4	0.33	1.79	0.99	43.4
LM361649/LM361610	373	360	425	435	8.5	3.5	–8.7	0.35	1.71	0.94	25.0
LM961548/LM961511	367	363	423	443	3.3	3.3	–53.6	0.71	0.84	0.46	30.0
EE971354/972100	373	367	501	501	4.8	3.3	–2.5	0.33	1.80	0.99	55.6
T-EE161363/161900	379	368	451	455	7	6.4	–33.6	0.50	1.20	0.66	32.8
T-HM262748/HM262710	377	367	456	467	6.4	3.3	6.4	0.33	1.79	0.99	52.5
☆T-HM262749/HM262710G2	377	367	456	467	6.4	3.3	6.4	0.33	1.79	0.99	49.7
EE333137/333197	382	372	470	478	6.4	3.3	–1.9	0.36	1.65	0.90	56.4
T-L163149/L163110	374	370	422	430	3.5	3.3	–7.2	0.31	1.95	1.07	18.8
T-EE161400/161850	386	375	445	455	7	6.4	–33.6	0.50	1.20	0.66	27.3
T-EE161400/161900	386	375	451	455	7	6.4	–33.6	0.50	1.20	0.66	30.8
T-EE231400/231975	388	379	472	481	6.4	3.3	–19.8	0.44	1.36	0.75	44.9
EE333140/333197	387	377	470	483	6.4	3.3	–1.9	0.36	1.65	0.90	50.8
LL562749/LL562710	372	371	396	401	2.3	1.5	–38.3	0.40	1.49	0.82	3.56
☆HM265049/HM265010G2	400	394	487	499	6.4	6.4	8	0.33	1.80	0.99	61.7
T-EE231462/231975	400	390	472	481	6.4	3.3	–19.8	0.44	1.36	0.75	40.7
LM565943/LM565910	407	397	493	500	6.4	3.3	–7.6	0.39	1.56	0.86	54.5
L865547/L865512	407	395	456	465	6.4	3.3	–42.4	0.49	1.21	0.67	20.0
EE192150/192200	410	400	478	482	6.4	3.3	–40.6	0.53	1.13	0.62	34.4

❶ "—" means that load center at outside on end of inner ring.

Inch system sizes

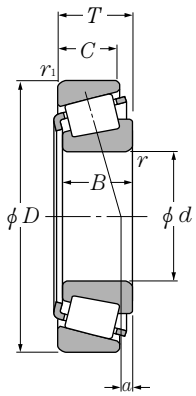

d 381.000～457.200mm

Boundary dimensions mm					Basic load ratings dynamic kN	static kN	dynamic kgf	static kgf
d	D	T	B	C	C_r	C_{or}	C_r	C_{or}
381.000	522.288	85.725	84.138	61.912	1,060	2,270	108,000	232,000
	523.875	85.725	84.138	61.912	1,060	2,270	108,000	232,000
	546.100	104.775	104.775	82.550	1,720	3,700	176,000	375,000
	546.100	104.775	104.775	82.550	1,840	4,000	188,000	410,000
	590.550	114.300	114.300	88.900	2,140	4,700	218,000	480,000
384.175	441.325	28.575	28.575	20.638	246	655	25,100	66,500
	546.100	104.775	104.775	82.550	1,720	3,700	176,000	375,000
	546.100	104.775	104.775	82.550	1,840	4,000	188,000	410,000
385.762	514.350	82.550	82.550	63.500	1,230	2,780	126,000	283,000
387.248	546.100	87.312	87.312	68.262	1,390	3,150	142,000	325,000
396.875	546.100	76.200	61.120	55.562	775	1,640	79,500	167,000
403.225	460.375	28.575	28.575	20.638	206	600	21,000	61,500
406.400	508.000	61.912	61.912	47.625	660	1,690	67,500	172,000
	546.100	76.200	61.120	55.562	775	1,640	79,500	167,000
	549.275	85.725	84.138	61.912	1,320	2,920	135,000	298,000
	590.550	107.950	107.950	80.962	1,640	3,400	167,000	345,000
	609.600	92.075	84.138	60.325	1,260	2,400	129,000	245,000
409.575	546.100	87.312	87.312	68.262	1,350	3,050	137,000	310,000
415.925	590.550	114.300	114.300	88.900	2,140	4,700	218,000	480,000
431.800	533.400	46.038	46.038	34.925	555	1,310	56,500	134,000
	552.450	44.450	44.450	31.750	615	1,340	62,500	137,000
	571.500	74.612	74.612	52.388	1,090	2,470	112,000	252,000
	603.250	76.200	73.025	50.800	975	2,050	99,500	209,000
	673.100	88.900	87.833	60.325	1,490	2,670	152,000	272,000
447.675	552.450	44.450	44.450	31.750	615	1,340	62,500	137,000
	635.000	120.650	120.650	95.250	2,420	5,550	247,000	565,000
457.200	552.450	44.450	44.450	31.750	615	1,340	62,500	137,000
	573.088	74.612	74.612	57.150	1,000	2,680	103,000	274,000

Remarks: 1. With regard to the chamfer dimensions on the back face of the inner and outer rings, installation dimensions r_{as} and r_{1as} are larger than the maximum value.
2. Bearing numbers marked "☆" designate bearing with hollow rollers and pin type cages.

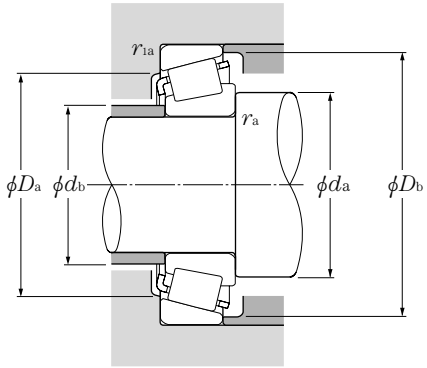

Equivalent bearing load

dynamic

$P_r = XF_r + YF_a$

$\frac{F_a}{F_r} \leqq e$		$\frac{F_a}{F_r} > e$	
X	Y	X	Y
1	0	0.4	Y_2

static

$P_{or} = 0.5F_r + Y_oF_a$

When $P_{or} < F_r$ use $P_{or} = F_r$

For values of e, Y_2 and Y_o see the table below.

Bearing numbers	Abutment and fillet dimensions mm						Load❶ center mm	Constant	Axial load factors		Mass kg
	d_a	d_b	D_a	D_b	r_{as} max	r_{1as} max	a	e	Y_2	Y_o	(approx.)
LM565949/LM565910	411	402	493	500	6.4	3.3	−7.6	0.39	1.56	0.86	52.5
LM565949/LM565912	411	402	493	500	6.4	3.3	−7.6	0.39	1.56	0.86	53.2
T-HM266446/HM266410	415	405	507	520	6.4	6.4	7.1	0.33	1.80	0.99	76.0
☆T-HM266447/HM266410G2	415	405	507	520	6.4	6.4	7.1	0.33	1.80	0.99	70.1
☆T-M268730/M268710G2	425	415	549	561	6.4	6.4	9.4	0.33	1.80	0.99	102
LL365348/LL365310	399	393	427	433	3.5	3.3	−30	0.34	1.77	0.97	5.89
T-HM266448/HM266410	417	407	507	519	6.4	6.4	7.1	0.33	1.80	0.99	69.0
☆T-HM266449/HM266410G2	417	407	507	519	6.4	6.4	7.1	0.33	1.80	0.99	69.0
LM665949/LM665910	415	406	482	495	6.4	3.3	−16.3	0.42	1.43	0.79	41.8
☆M667935/M667911G2	424	414	510	528	6.4	6.4	−16.2	0.42	1.43	0.79	56.6
EE234156/234215	428	418	504	516	6.4	6.4	−35.8	0.47	1.27	0.70	51.5
LL566848/LL566810	418	414	445	452	3.5	3.3	−41.5	0.40	1.49	0.82	6.17
L467549/L467510	426	423	483	492	3.3	3.3	−19.6	0.37	1.63	0.90	25.1
EE234160/234215	435	425	504	516	6.4	6.4	−35.8	0.47	1.27	0.70	48.7
LM567949/LM567910	437	427	519	525	6.4	3.3	−14.7	0.41	1.47	0.81	56.2
EE833160X/833232	448	435	549	561	9.7	6.4	8.5	0.33	1.84	1.01	86.6
EE911600/912400	443	439	567	570	6.8	6.4	−11.5	0.38	1.57	0.86	91.3
M667948/M667911	440	431	510	528	6.4	6.4	−16.2	0.42	1.43	0.79	49.8
☆T-M268749/M268710G2	451	441	549	561	6.4	6.4	9.4	0.33	1.80	0.99	87.8
T-80385/80325	450	446	510	510	3.3	3.3	−23.4	0.31	1.94	1.07	19.7
80170/80217	456	452	531	536	3.3	3.3	−27.5	0.32	1.88	1.04	23.1
T-LM869448/LM869410	457	453	537	549	3.3	3.3	−50.1	0.55	1.10	0.60	45.7
EE241701/242375	446	457	558	564	6.4	6.4	−46.5	0.53	1.14	0.63	64.9
EE571703/572650	472	466	630	632.6	6.4	3.3	−21.4	0.40	1.49	0.82	114
80176/80217	467	464	531	536	3.3	3.3	−27.5	0.32	1.88	1.04	20.4
☆M270749/M270710AG2	484	474	591	606	6.4	6.4	8.5	0.33	1.80	0.99	107
80180/80217	474	471	531	536	3.3	3.3	−27.5	0.32	1.88	1.04	18.7
L570649/L570610	485	475	543	558	6.4	6.4	−26.2	0.40	1.49	0.82	38.9

❶ "−" means that load center at outside on end of inner ring.

Inch system sizes

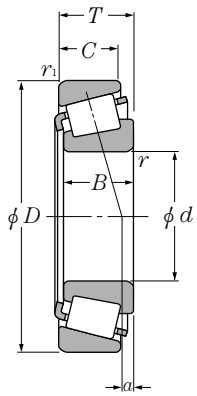

d 457.200～584.200mm

Boundary dimensions mm					Basic load ratings dynamic kN	static kN	dynamic kgf	static kgf
d	D	T	B	C	C_r	C_{or}	C_r	C_{or}
457.200	596.900	76.200	73.025	53.975	975	2,350	99,500	239,000
	603.250	85.725	84.138	60.325	1,140	2,680	116,000	274,000
	615.950	85.725	85.725	66.675	1,350	3,350	138,000	340,000
	730.148	120.650	114.300	82.550	2,540	4,350	259,000	445,000
476.250	565.150	41.275	41.275	31.750	405	1,200	41,500	122,000
479.425	679.450	128.588	128.588	101.600	2,850	6,500	290,000	660,000
482.600	615.950	85.725	85.725	66.675	1,350	3,350	138,000	340,000
	634.873	80.962	80.962	63.500	1,170	3,100	119,000	315,000
488.950	634.873	84.138	84.138	61.912	1,460	3,450	149,000	355,000
	660.400	93.662	94.458	69.850	1,830	4,000	186,000	410,000
489.026	634.873	80.962	80.962	63.500	1,170	3,100	119,000	315,000
498.475	634.873	80.962	80.962	63.500	1,170	3,100	119,000	315,000
501.650	711.200	136.525	136.525	106.362	2,940	6,850	300,000	695,000
508.000	838.200	146.050	139.700	104.775	3,150	6,400	325,000	655,000
533.400	635.000	50.800	50.800	38.100	695	1,680	71,000	171,000
536.575	761.873	146.050	146.050	114.300	3,450	7,600	350,000	775,000
539.750	635.000	50.800	50.800	38.100	695	1,680	71,000	171,000
549.275	692.150	80.962	80.962	61.912	1,350	3,500	138,000	355,000
558.800	736.600	76.200	76.200	50.800	1,200	2,690	122,000	275,000
	736.600	88.108	88.108	63.500	1,460	3,350	148,000	345,000
	736.600	104.775	104.775	80.962	1,850	4,400	189,000	450,000
571.500	812.800	155.575	155.575	120.650	4,050	9,150	415,000	935,000
584.200	685.800	49.212	49.212	34.925	705	1,930	72,000	197,000

Remarks: 1. With regard to the chamfer dimensions on the back face of the inner and outer rings, installation dimensions r_{as} and r_{1as} are larger than the maximum value.
2. Bearing numbers marked "☆" designate bearing with hollow rollers and pin type cages.

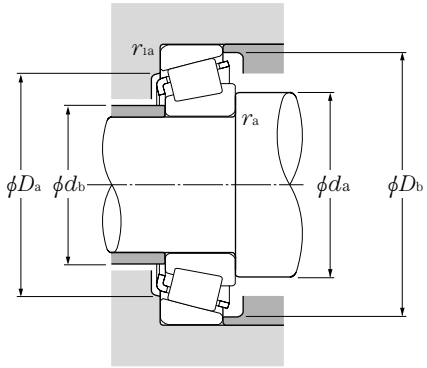

Equivalent bearing load

dynamic

$P_r = XF_r + YF_a$

$\frac{F_a}{F_r} \leqq e$		$\frac{F_a}{F_r} > e$	
X	Y	X	Y
1	0	0.4	Y_2

static

$P_{or} = 0.5F_r + Y_oF_a$

When $P_{or} < F_r$ use $P_{or} = F_r$

For values of e, Y_2 and Y_o see the table below.

Bearing numbers	Abutment and fillet dimensions mm						Load❶ center mm	Constant	Axial load factors		Mass kg
	d_a	d_b	D_a	D_b	r_{as} max	r_{1as} max	a	e	Y_2	Y_o	(approx.)
EE244180/244235	494	478	567	570	9.7	3.3	–27.1	0.40	1.48	0.82	53.9
LM770949/LM770910	489	479	570	579	6.4	3.3	–29.7	0.46	1.32	0.72	63.8
☆LM272235/LM272210G2	493	483	585	597	6.4	6.4	–11.3	0.33	1.80	0.99	63.8
EE671801/672873	507	491	675	681	9.7	6.4	–6.6	0.39	1.53	0.84	188
LL771948/LL771911	495	491	543	549	3.3	3.3	–58.4	0.47	1.28	0.70	16.7
☆T-M272749/M272710G2	516	507	633	648	6.4	6.4	8.9	0.33	1.80	0.99	130
☆LM272249/LM272210G2	513	501	585	597	6.4	6.4	–11.3	0.33	1.80	0.99	54.9
EE243190/243250	516	510	603	609	6.4	3.3	–18.5	0.34	1.76	0.97	60.2
LM772748/LM772710A	522	510	600	613	6.4	3.3	–40.4	0.47	1.27	0.70	60.3
☆T-EE640192/640260G2	522	513	624	630	6.4	6.4	–4.9	0.31	1.95	1.07	85.2
EE243192/243250	522	516	603	609	6.4	3.3	–18.5	0.34	1.76	0.97	58.0
EE243196/243250	528	522	603	609	6.4	3.3	–18.5	0.34	1.76	0.97	54.7
☆M274149/M274110G2	540	534	663	678	6.4	6.4	11.8	0.33	1.80	0.99	152
EE426200/426330	564	552	759	768	9.7	9.7	–26.1	0.48	1.25	0.69	296
LL575343/LL575310	558	549	612	621	6.4	6.4	–50.3	0.41	1.48	0.81	26.4
☆M276449/M276410G2	576	570	711	726	6.4	6.4	10.5	0.33	1.80	0.99	187
LL575349/LL575310	564	555	612	621	6.4	6.4	–50.3	0.41	1.48	0.81	24.9
L476549/L476510	579	570	657	666	6.4	6.4	–32.2	0.38	1.59	0.88	68.2
EE542220/542290	594	585	696	705	6.4	6.4	–66.6	0.51	1.17	0.65	76.7
EE843220/843290	591	585	699	708	6.4	6.4	–21.8	0.34	1.76	0.97	88.7
LM377449/LM377410	594	585	696	708	6.4	6.4	–15.6	0.35	1.73	0.95	106
☆M278749/M278710AG2	615	609	756	774	6.4	6.4	12.7	0.33	1.80	0.99	227
T-LL778149/LL778110	603	600	663	669	3.5	3.3	–64.5	0.44	1.37	0.75	27.8

❶ "—" means that load center at outside on end of inner ring.

Inch system sizes

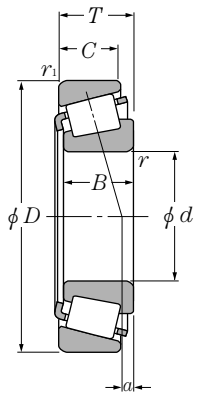

d 596.900～1,270.000mm

Boundary dimensions mm					Basic load ratings dynamic kN	static kN	dynamic kgf	static kgf
d	D	T	B	C	C_r	C_{or}	C_r	C_{or}
596.900	685.800	31.750	31.750	25.400	335	895	34,000	91,000
609.396	762.000	95.250	92.075	71.438	1,770	4,850	180,000	495,000
609.600	762.000	95.250	92.075	71.438	1,770	4,850	180,000	495,000
	787.400	93.662	93.662	69.850	2,190	5,050	223,000	515,000
	812.800	82.550	82.550	60.325	1,670	3,900	170,000	400,000
635.000	736.600	57.150	53.975	41.275	695	1,980	71,000	202,000
660.400	812.800	95.250	95.250	73.025	1,950	5,150	199,000	530,000
673.100	793.750	66.675	61.912	49.212	985	2,700	101,000	275,000
685.800	876.300	93.662	92.075	69.850	2,060	5,450	210,000	555,000
711.200	914.400	85.725	82.550	60.325	1,810	4,450	185,000	455,000
723.900	914.400	84.138	80.962	60.325	1,810	4,450	185,000	455,000
749.300	990.600	159.500	160.337	123.000	4,300	11,300	440,000	1,160,000
774.700	965.200	93.662	80.962	66.675	1,530	3,450	156,000	350,000
838.200	1,041.400	93.662	88.900	66.675	2,120	5,200	216,000	530,000
977.900	1,130.300	66.675	63.500	47.625	1,190	3,600	122,000	365,000
1,063.625	1,219.200	65.088	65.088	42.862	1,410	4,300	144,000	435,000
1,066.800	1,219.200	65.088	65.088	42.862	1,410	4,300	144,000	435,000
	1,320.800	95.250	88.900	69.850	2,330	6,200	237,000	635,000
1,092.200	1,320.800	95.250	88.900	69.850	2,330	6,200	237,000	635,000
1,270.000	1,435.100	69.850	65.088	47.625	1,590	5,050	162,000	515,000

Remarks: 1. With regard to the chamfer dimensions on the back face of the inner and outer rings, installation dimensions r_{as} and r_{1as} are larger than the maximum value.
2. Bearing numbers marked "☆" designate bearing with hollow rollers and pin type cages.

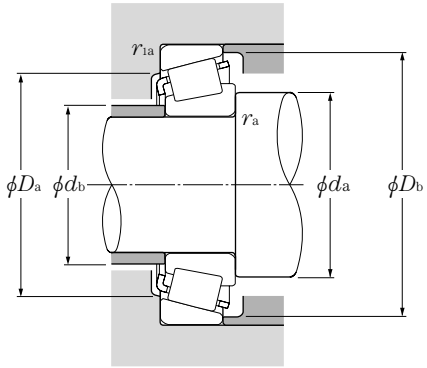

Equivalent bearing load

dynamic

$P_r = XF_r + YF_a$

$\frac{F_a}{F_r} \leqq e$		$\frac{F_a}{F_r} > e$	
X	Y	X	Y
1	0	0.4	Y_2

static

$P_{or} = 0.5F_r + Y_oF_a$

When $P_{or} < F_r$ use $P_{or} = F_r$

For values of e, Y_2 and Y_o see the table below.

Bearing numbers	Abutment and fillet dimensions mm						Load center[1] mm	Constant	Axial load factors		Mass kg
	d_a	d_b	D_a	D_b	r_{as} max	r_{1as} max	a	e	Y_2	Y_o	(approx.)
680235/680270	615	615	663	669	3.5	3.3	–94.8	0.53	1.14	0.63	15.8
L879946/L879910	642	633	720	741	6.4	6.4	–58.2	0.49	1.23	0.68	95.7
L879947/L879910	642	633	720	741	6.4	6.4	–58.2	0.49	1.23	0.68	95.6
☆EE649240/649310G2	642	633	747	764	6.4	6.4	–23.8	0.33	1.80	0.99	112
EE743240/743320	645	636	768	768	6.4	6.4	–31.8	0.33	1.83	1.01	104
80780/80720	654	651	714	717	3.3	3.3	–69.2	0.44	1.37	0.75	38.3
L281148/L281110A	693	681	777	789	6.4	6.4	–27.7	0.33	1.80	0.99	93.5
LL481448/LL481411	702	690	765	771	6.4	6.4	–53.8	0.36	1.67	0.92	51.3
☆EE655270/655345G2	723	714	831	843	6.4	6.4	–56.6	0.42	1.43	0.79	134
☆EE755280/755360G2	750	741	873	876	6.4	6.4	–52.4	0.38	1.58	0.87	136
☆EE755285/755360G2	756	750	873	876	5.5	6.4	–54	0.38	1.58	0.87	126
☆LM283649/LM283610G2	792	786	936	952	6.4	6.4	–4.4	0.33	1.80	0.99	309
EE752305/752380	810	798	921	924	6.4	3.3	–66.6	0.40	1.49	0.82	126
☆EE763330/763410G2	876	870	996	1,000	6.4	6.4	–85.3	0.44	1.36	0.75	172
LL687949/LL687910	1,010	1,005	1,095	1,100	6.4	6.4	–118.2	0.44	1.37	0.75	103
LL788345/LL788310	1,090	1,085	1,185	1,190	3.3	3.3	–142.8	0.48	1.26	0.69	422
LL788349/LL788310	1,090	1,090	1,185	1,190	3.3	3.3	–142.8	0.48	1.26	0.69	422
EE776420/776520	1,115	1,115	1,260	1,289	6.4	6.4	–175.6	0.57	1.05	0.58	796
EE776430/776520	1,135	1,130	1,260	1,289	6.4	6.4	–175.6	0.57	1.05	0.58	794
LL889049/LL889010	1,305	1,300	1,395	1,405	6.4	6.4	–220.2	0.58	1.04	0.57	666

[1] "—" means that load center at outside on end of inner ring.

Double Row Tapered Roller Bearings (Outside Direction)

Metric system sizes

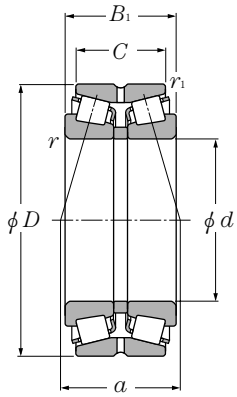

d 100～120mm

Boundary dimensions mm						Basic load ratings dynamic kN	static kN	dynamic kgf	static kgf	Bearing numbers
d	D	B_1	C	$r_{s\,min}$ ❶	$r_{ls\,min}$ ❶	C_r	C_{or}	C_r	C_{or}	
100	165	52	46	2.5	0.8	204	305	20,800	31,500	CRI-2052
	180	82	66	3	1	440	675	45,000	68,500	CRI-2059
	180	83	67	3	1	440	675	45,000	68,500	430220XU
	180	107	87	3	1	565	925	58,000	94,500	432220XU
	180	140	115	2.5	1	585	1,090	59,500	111,000	CRI-2010
	190	124.5	102	3	1	760	1,220	77,500	124,000	CRI-2072
	215	112	87	4	1	700	995	71,500	102,000	430320XU
	215	112	87	3	1	590	800	60,000	81,500	430320X
	215	162	127	4	1	980	1,540	100,000	157,000	432320U
105	190	88	70	3	1	490	760	50,000	77,500	430221XU
	190	115	95	3	1	650	1,080	66,000	111,000	432221XU
	190	117	96	3	1	650	1,080	66,000	111,000	CRI-2152
	225	116	91	4	1	750	1,060	76,000	109,000	430321XU
	225	116	91	3	1	625	845	63,500	86,000	430321X
	225	170	133	3	1	955	1,470	97,500	150,000	432321
110	160	57.5	47.5	1.5	0.5	218	450	22,200	46,000	CRI-2258
	180	56	50	2.5	0.6	228	340	23,300	35,000	413122
	180	70	56	2.5	0.6	298	485	30,500	49,500	423122
	180	125	100	2.5	0.6	515	980	52,500	99,500	CRI-2219
	200	92	74	3	1	555	865	56,500	88,500	430222XU
	200	121	101	3	1	720	1,210	73,500	124,000	432222XU
	240	118	93	4	1	825	1,180	84,000	120,000	430322U
	240	118	93	3	1	685	925	69,500	94,500	430322
	240	181	142	4	1	1,210	1,940	123,000	197,000	432322U
	240	181	142	3	1	1,070	1,660	109,000	169,000	432322
120	180	46	41	2.5	0.6	193	298	19,700	30,500	413024
	180	58	46	2.5	0.6	230	375	23,500	38,000	423024
	200	62	55	2.5	0.6	263	435	26,800	44,500	413124
	200	78	62	2.5	0.6	370	610	38,000	62,500	423124
	200	78	62	2.5	0.6	370	610	38,000	62,500	CRI-2460
	200	100	84	2.5	1	530	1,100	54,000	113,000	CRI-2416
	215	97	78	3	1	595	940	60,500	96,000	430224XU
	215	132	109	3	1	790	1,360	80,500	139,000	432224XU
	260	128	101	4	1	960	1,390	97,500	142,000	430324XU
	260	128	101	3	1	800	1,100	81,500	112,000	430324X
	260	188	145	4	1	1,400	2,270	143,000	231,000	432324U

❶ Minimum allowable dimension for chamfer dimension r or r_1.

Double Row Tapered Roller Bearings (Outside Direction)

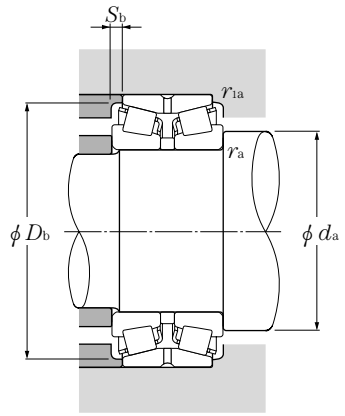

Equivalent bearing load

dynamic

$P_r = XF_r + YF_a$

$\frac{F_a}{F_r} \leqq e$		$\frac{F_a}{F_r} > e$	
X	Y	X	Y
1	Y_1	0.67	Y_2

static

$P_{or} = F_r + Y_o F_a$

For values of e, Y_2 and Y_o see the table below.

Abutment and fillet dimensions mm					Load center mm	Constant	Axial load factors			Mass kg
d_a min	D_b min	S_b min	r_{as} max	r_{las} max	a	e	Y_1	Y_2	Y_o	(approx.)
112	153	3	2	0.8	53.5	0.33	2.03	3.02	1.98	3.94
114	169	8	2.5	1	80.5	0.42	1.61	2.39	1.57	8.08
114	168	8	2.5	1	81.5	0.42	1.61	2.39	1.57	8.11
114	171	10	2.5	1	92	0.42	1.61	2.39	1.57	10.7
112	168.5	12.5	2	1	97.5	0.33	2.06	3.06	2.01	13.8
114	179.5	11.5	2.5	1	95.5	0.33	2.02	3.00	1.97	14.3
118	200	12.5	3	1	92	0.35	1.96	2.91	1.91	18.4
118	200	12.5	3	1	93.5	0.35	1.95	2.90	1.91	16.5
118	200	17.5	3	1	113	0.35	1.96	2.91	1.91	26.5
119	178	9	2.5	1	86	0.42	1.61	2.39	1.57	9.73
119	180	10	2.5	1	97.5	0.42	1.61	2.39	1.57	13.1
119	179.5	10.5	2.5	1	99.5	0.42	1.61	2.39	1.57	12.9
123	209	12.5	3	1	96.5	0.35	1.96	2.91	1.91	21
123	209	12.5	3	1	96.5	0.35	1.95	2.90	1.91	19.6
119	208	18.5	2.5	1	117.5	0.35	1.96	2.90	1.91	30.2
118.5	146	5	1.5	0.5	60.5	0.36	1.90	2.83	1.86	3.41
122	169	3	2	0.6	66.5	0.40	1.68	2.50	1.64	5.2
122	166	7	2	0.6	66.5	0.33	2.03	3.02	1.98	6.38
122	168	12.5	2	0.6	87	0.26	2.55	3.80	2.50	11.2
124	188	9	2.5	1	90	0.42	1.61	2.39	1.57	11.4
124	190	10	2.5	1	102	0.42	1.61	2.39	1.57	15.5
128	222	12.5	3	1	100	0.35	1.96	2.91	1.91	24.5
128	222	12.5	3	1	97.5	0.35	1.95	2.90	1.91	22.1
128	222	19.5	3	1	127	0.35	1.96	2.91	1.91	38.2
128	222	19.5	3	1	124	0.35	1.95	2.90	1.91	35.6
132	171	2.5	2	0.6	59	0.37	1.80	2.69	1.76	3.85
132	170	6	2	0.6	66	0.37	1.80	2.69	1.76	4.41
132	184	3.5	2	0.6	76.5	0.43	1.57	2.34	1.53	7.24
132	188	8	2	0.6	76.5	0.37	1.80	2.69	1.76	8.96
132	187	8	2	0.6	81.5	0.37	1.80	2.69	1.76	8.78
132	190.5	8	2	1	87.5	0.34	1.96	2.92	1.92	12.6
134	203	9.5	2.5	1	98	0.44	1.55	2.31	1.52	13.6
134	204	11.5	2.5	1	112	0.44	1.55	2.31	1.52	18.9
138	239	13.5	3	1	107	0.35	1.96	2.91	1.91	30.5
138	239	13.5	3	1	106	0.35	1.95	2.90	1.91	29.4
138	239	21.5	3	1	130	0.35	1.96	2.91	1.91	47

Double Row Tapered Roller Bearings (Outside Direction)

Metric system sizes

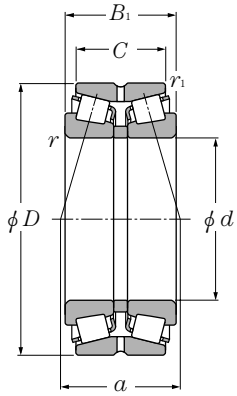

d 125～150mm

Boundary dimensions mm						Basic load ratings dynamic kN	static kN	dynamic kgf	static kgf	Bearing numbers
d	D	B_1	C	$r_{s\,min}$ ❶	$r_{ls\,min}$ ❶	C_r	C_{or}	C_r	C_{or}	
125	210	110	88	3	1	570	1,080	58,000	110,000	**CRI-2555**
130	200	52	46	2.5	0.6	224	365	22,900	37,500	**413026**
	200	65	52	2.5	0.6	294	490	29,900	50,000	**423026**
	210	64	57	2.5	0.6	315	485	32,000	49,500	**413126**
	210	80	64	2.5	0.6	410	675	42,000	69,000	**423126**
	210	109	90	2.5	0.6	530	1,100	54,000	113,000	**CRI-2619**
	214	115	98	2.5	0.6	540	1,040	55,000	106,000	**CRI-2651**
	230	95	75	3	1	560	840	57,000	86,000	**CRI-2614**
	230	98	78.5	4	1	640	1,010	65,500	103,000	**430226XU**
	230	100	80.5	3	1	560	840	57,000	86,000	**CRI-2655**
	230	145	115	3	1	895	1,460	91,000	149,000	**CRI-2616**
	230	145	117.5	4	1	905	1,630	92,500	166,000	**432226XU**
	230	149	120	3	1	905	1,630	92,500	166,000	**CRI-2654**
	280	137	107.5	5	1.5	1,110	1,660	113,000	169,000	**430326XU**
	280	205	163.5	4	1.5	1,530	2,470	156,000	252,000	**432326**
140	210	53	47	2.5	0.6	262	415	26,700	42,500	**413028**
	210	66	53	2.5	0.6	300	535	30,500	54,500	**423028**
	210	106	94	2.5	0.6	580	1,220	59,000	124,000	**CRI-2818**
	225	68	61	3	1	370	580	37,500	59,500	**413128**
	225	84	68	3	1	390	650	40,000	66,000	**423128**
	225	85	68	3	1	390	650	40,000	66,000	**CRI-2872**
	230	120	94	2.5	0.8	680	1,280	69,500	131,000	**CRI-2855**
	230	140	110	3	1	750	1,470	76,500	150,000	**CRI-2825**
	240	132	106	3	1.5	755	1,480	77,000	150,000	**CRI-2869**
	250	102	82.5	3	1	640	970	65,500	99,000	**430228X**
	250	102	82.5	4	1	720	1,140	73,500	117,000	**430228XU**
	250	153	125.5	4	1	1,050	1,840	107,000	188,000	**432228XU**
	270	120	95	4	3	835	1,240	85,000	127,000	**CRI-2874**
	300	102	77	2.5	1	645	1,010	66,000	103,000	**CRI-2834**
	300	145	115.5	4	1.5	1,100	1,560	112,000	160,000	**430328X**
	300	145	115.5	5	1.5	1,260	1,900	129,000	194,000	**430328XU**
	300	223	177.5	4	1.5	1,690	2,740	173,000	279,000	**432328**
150	225	56	50	3	1	274	430	27,900	44,000	**413030**
	225	70	56	3	1	355	630	36,000	64,500	**423030**
	250	80	71	3	1	485	805	49,500	82,000	**413130**
	250	100	80	3	1	600	1,040	61,500	106,000	**423130**

❶ Minimum allowable dimension for chamfer dimension r or r_1.

Double Row Tapered Roller Bearings (Outside Direction)

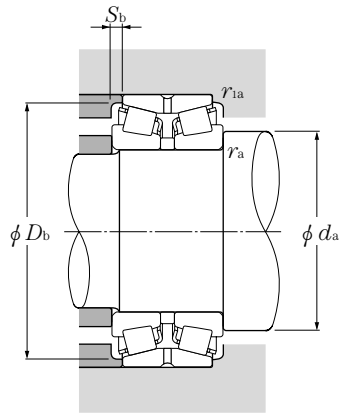

Equivalent bearing load

dynamic

$P_r = XF_r + YF_a$

$\frac{F_a}{F_r} \leqq e$		$\frac{F_a}{F_r} > e$	
X	Y	X	Y
1	Y_1	0.67	Y_2

static

$P_{or} = F_r + Y_o F_a$

For values of e, Y_2 and Y_o see the table below.

Abutment and fillet dimensions					Load center	Constant	Axial load factors			Mass
mm					mm					kg
d_a min	D_b min	S_b min	r_{as} max	r_{las} max	a	e	Y_1	Y_2	Y_o	(approx.)
139	197.5	11	2.5	1	101	0.42	1.62	2.42	1.59	14.5
142	186	3	2	0.6	66	0.37	1.80	2.69	1.76	5.55
142	189	6.5	2	0.6	71.5	0.37	1.80	2.69	1.76	6.62
142	196	3.5	2	0.6	69	0.33	2.03	3.02	1.98	7.83
142	198	8	2	0.6	79.5	0.37	1.80	2.69	1.76	9.77
142	191.5	9.5	2	0.6	89	0.34	1.96	2.90	1.90	14.2
142	198	8.5	2	0.6	111	0.46	1.47	2.20	1.40	15.5
144	215.5	10	2.5	1	96	0.43	1.57	2.30	1.50	15
148	218	9.5	3	1	102	0.44	1.55	2.31	1.52	15.9
144	215.5	9.5	2.5	1	101	0.43	1.57	2.30	1.50	15.8
144	220	15	2.5	1	117.5	0.40	1.68	2.50	1.60	23
148	219	13.5	3	1	124	0.44	1.55	2.31	1.52	24.1
144	220	14.5	2.5	1	128	0.44	1.55	2.30	1.50	24.6
152	255	14.5	4	1.5	116	0.35	1.96	2.91	1.91	37.9
148	264	20.5	3	1.5	143	0.35	1.95	2.90	1.90	56.6
152	199	3	2	0.6	68.5	0.37	1.80	2.69	1.76	5.88
152	197	6.5	2	0.6	75	0.37	1.84	2.74	1.80	7.11
152	201.5	6	2	0.6	93	0.35	1.95	2.90	1.91	12.5
154	210	3.5	2.5	1	73.5	0.33	2.03	3.02	1.98	9.18
154	209	8	2.5	1	88	0.37	1.80	2.69	1.76	11.8
154	211	8.5	2.5	1	88	0.37	1.80	2.69	1.76	11.8
152	214	13	2	0.8	108	0.40	1.68	2.50	1.64	15.5
154	216	15	2.5	1	106	0.32	2.12	3.15	2.07	20.5
154	226.5	13	2.5	1.5	124.5	0.44	1.53	2.27	1.49	22.1
158	237	9.5	3	1	106	0.43	1.57	2.34	1.53	18
158	237	9.5	3	1	107	0.44	1.55	2.31	1.52	19.9
158	238	13.5	3	1	131	0.44	1.55	2.31	1.52	30.1
158	249	12.5	3	2.5	104	0.33	2.05	3.05	2.00	27.6
152	264	12.5	2	1	129	0.55	1.24	1.84	1.21	32.5
162	272	14.5	4	1.5	123	0.35	1.95	2.90	1.91	44.4
162	273	14.5	4	1.5	123	0.35	1.96	2.91	1.91	46.6
158	282	22.5	3	1.5	156	0.35	1.95	2.90	1.91	69
164	213	3	2.5	1	73.5	0.37	1.80	2.69	1.76	6.66
164	212	7	2.5	1	79.5	0.37	1.80	2.69	1.76	8.76
164	231	4.5	2.5	1	82.5	0.33	2.03	3.02	1.98	14.3
164	234	10	2.5	1	96.5	0.37	1.80	2.69	1.76	18

Double Row Tapered Roller Bearings (Outside Direction)

Metric system sizes

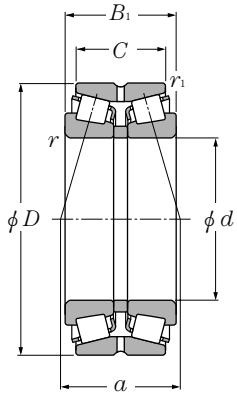

d 150～180mm

Boundary dimensions mm						Basic load ratings dynamic kN	static kN	dynamic kgf	static kgf	Bearing numbers
d	D	B_1	C	$r_{s\,min}$ ❶	$r_{ls\,min}$ ❶	C_r	C_{or}	C_r	C_{or}	
150	250	115	95	2.5	1	660	1,230	67,500	126,000	CRI-3015
	250	137	112	2.5	1	865	1,590	88,500	162,000	CRI-3061
	260	150	115	4	1	945	1,820	96,000	185,000	CRI-3063
	270	109	87	4	1	770	1,210	78,500	123,000	430230U
	270	164	130	4	1	1,200	2,140	122,000	218,000	432230XU
	320	154	120	5	1.5	1,410	2,140	144,000	218,000	430330U
	320	154	120	4	1.5	1,170	1,750	119,000	178,000	430330
160	240	60	53	3	1	330	535	34,000	54,500	413032
	240	75	60	3	1	430	765	44,000	78,000	423032
	240	110	90	2.5	0.6	660	1,230	67,500	126,000	CRI-3256
	270	86	76	3	1	595	965	60,500	98,000	413132E1
	270	108	86	3	1	675	1,180	69,000	120,000	423132E1
	270	110	86	2.5	1	785	1,360	80,000	138,000	CRI-3210
	270	140	120	2.5	1	960	1,910	98,000	195,000	CRI-3225
	270	150	120	2.5	1	960	1,860	98,000	190,000	CRI-3219
	280	150	125	4	1	1,090	1,940	112,000	198,000	CRI-3258
	290	115	91	4	1	900	1,440	92,000	147,000	430232U
	290	178	144	4	1	1,530	2,840	156,000	290,000	432232U
	340	160	126	5	1.5	1,570	2,390	160,000	244,000	430332XU
	340	160	126	4	1.5	1,290	1,950	132,000	199,000	430332X
165	290	150	125	5	1	1,030	1,820	105,000	186,000	CRI-3309
	350	146	108	7.5	1.5	1,220	1,980	124,000	202,000	CRI-3305
170	250	85	65	2.5	1	425	815	43,500	83,000	CRI-3420
	260	67	60	3	1	365	620	37,000	63,500	413034
	260	84	67	3	1	490	865	50,000	88,000	423034
	280	88	78	3	1	550	900	56,000	92,000	413134E1
	280	110	88	3	1	725	1,270	74,000	130,000	423134E1
	280	134	106	3	1	855	1,790	87,500	182,000	CRI-3452
	280	150	130	2.5	1	980	1,880	100,000	192,000	CRI-3410
	310	125	97	5	1.5	1,050	1,690	107,000	173,000	430234U
	310	192	152	5	1.5	1,710	3,200	174,000	325,000	432234XU
180	280	74	66	3	1	425	735	43,000	75,000	413036E1
	280	93	74	3	1	580	1,050	59,500	107,000	423036E1
	280	134.5	108	2.5	1	885	1,800	90,000	183,000	CRI-3623
	300	96	85	4	1.5	705	1,190	72,000	121,000	413136E1

❶ Minimum allowable dimension for chamfer dimension r or r_1.

Double Row Tapered Roller Bearings (Outside Direction)

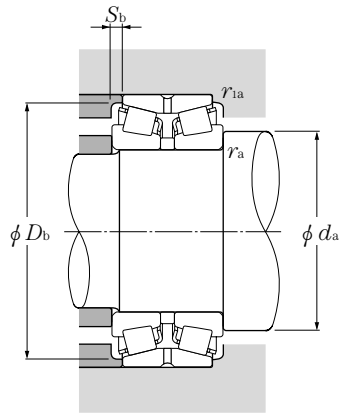

Equivalent bearing load

dynamic

$P_r = XF_r + YF_a$

$\frac{F_a}{F_r} \leqq e$		$\frac{F_a}{F_r} > e$	
X	Y	X	Y
1	Y_1	0.67	Y_2

static

$P_{or} = F_r + Y_o F_a$

For values of e, Y_2 and Y_o see the table below.

Abutment and fillet dimensions					Load center	Constant	Axial load factors			Mass
mm					mm					kg
d_a min	D_b min	S_b min	r_{as} max	r_{las} max	a	e	Y_1	Y_2	Y_o	(approx.)
162	234	10	2	1	107.5	0.37	1.80	2.69	1.76	21.2
162	238	12.5	2	1	119	0.41	1.66	2.47	1.62	27.7
168	239.5	17.5	3	1	125	0.41	1.66	2.47	1.62	31.4
168	255	11	3	1	114	0.44	1.55	2.31	1.52	24.4
168	254	17	3	1	139	0.44	1.55	2.31	1.52	37.3
172	292	17	4	1.5	132	0.35	1.96	2.91	1.91	55.4
172	292	17	4	1.5	135	0.37	1.80	2.69	1.76	52.8
174	227	3.5	2.5	1	79	0.37	1.80	2.69	1.76	8.29
174	227	7.5	2.5	1	85.5	0.37	1.80	2.69	1.76	10.7
172	231.5	10	2	0.6	107	0.37	1.80	2.69	1.76	15.6
174	254	5	2.5	1	98.5	0.40	1.68	2.50	1.64	18.2
174	250	11	2.5	1	106	0.37	1.80	2.69	1.76	22.8
172	250.5	12	2	1	95	0.31	2.21	3.29	2.16	22.9
172	251.5	10	2	1	113.5	0.32	2.12	3.15	2.07	31.8
172	252	15	2	1	119.5	0.32	2.12	3.15	2.07	32.8
178	264.5	12.5	3	1	119.5	0.32	2.12	3.15	2.07	34.8
178	272	12	3	1	122	0.44	1.55	2.31	1.52	31.9
178	275	17	3	1	150	0.44	1.55	2.31	1.52	46.9
182	310	17	4	1.5	138	0.35	1.96	2.91	1.91	65.5
182	311	17	4	1.5	141	0.37	1.80	2.69	1.76	62.4
187	274	12.5	4	1	127.5	0.32	2.12	3.15	2.07	37.5
201	308.5	19	6	1.5	124.5	0.34	2.00	2.98	1.96	61.2
182	237.5	10	2	1	103	0.44	1.54	2.29	1.50	12.6
184	242	3.5	2.5	1	86.5	0.37	1.80	2.69	1.76	11.6
184	244	8.5	2.5	1	93.5	0.37	1.80	2.69	1.76	14.3
184	260	5	2.5	1	104	0.40	1.68	2.50	1.64	19.5
184	260	11	2.5	1	109	0.37	1.80	2.69	1.76	24.7
184	250.5	14	2.5	1	132.5	0.44	1.52	2.26	1.49	32.8
182	265	10	2	1	125.5	0.33	2.03	3.02	1.98	34.3
192	290.5	14	4	1.5	132	0.44	1.55	2.31	1.52	38
192	293	20	4	1.5	160	0.44	1.55	2.31	1.52	58.2
194	260	4	2.5	1	94	0.37	1.80	2.69	1.76	15.9
194	262	9.5	2.5	1	102	0.37	1.80	2.69	1.76	19
192	266	13.5	2	1	122	0.37	1.80	2.69	1.76	27
198	280	5.5	3	1.5	111	0.40	1.68	2.50	1.64	24.6

Double Row Tapered Roller Bearings (Outside Direction)

Metric system sizes

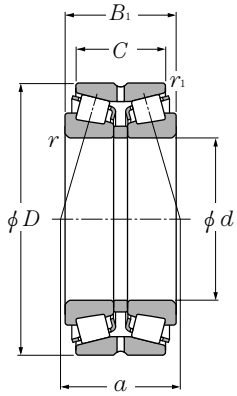

d 180～220mm

Boundary dimensions mm						Basic load ratings dynamic kN	static kN	dynamic kgf	static kgf	Bearing numbers
d	D	B_1	C	$r_{s\,min}$ ❶	$r_{1s\,min}$ ❶	C_r	C_{or}	C_r	C_{or}	
180	300	120	96	4	1.5	885	1,530	90,500	156,000	423136E1
	300	164	134	3	1	1,150	2,270	118,000	231,000	CRI-3625
	320	127	99	5	1.5	1,080	1,780	110,000	182,000	430236U
	320	192	152	5	1.5	1,760	3,350	180,000	345,000	432236U
	340	180	140	4	1.5	1,390	2,590	142,000	264,000	CRI-3618
190	290	75	67	3	1	430	740	44,000	75,500	413038E1
	290	94	75	3	1	615	1,110	63,000	113,000	423038E1
	320	104	92	4	1.5	780	1,280	79,500	131,000	413138
	320	130	104	4	1.5	985	1,710	100,000	174,000	423138
	340	133	105	5	1.5	1,230	2,010	125,000	205,000	430238U
	340	204	160	5	1.5	1,970	3,700	201,000	380,000	432238U
	340	204	160	4	1.5	1,710	3,350	175,000	340,000	432238
200	310	82	73	3	1	530	940	54,000	96,000	413040E1
	310	103	82	3	1	720	1,320	73,000	135,000	423040E1
	310	151	123	2.5	1	1,020	2,080	105,000	212,000	CRI-4020
	310	170	140	4	1	1,270	2,690	130,000	274,000	CRI-4027
	320	146	110	4	1.5	910	1,950	92,500	199,000	CRI-4036
	330	180	140	4	1.5	1,330	2,610	136,000	266,000	CRI-4030
	340	112	100	4	1.5	965	1,660	98,500	169,000	413140
	340	140	112	4	1.5	1,090	1,910	111,000	195,000	423140
	340	184	150	3	1.5	1,530	3,000	156,000	305,000	CRI-4019
	360	142	110	5	1.5	1,350	2,210	137,000	226,000	430240U
	360	218	174	5	1.5	2,260	4,250	230,000	435,000	432240U
	360	218	174	4	1.5	1,980	3,950	201,000	400,000	432240
206	283	102	83	3	0.6	540	1,320	55,000	134,000	CRI-4107
210	355	116	103	3	1.5	880	1,500	89,500	153,000	CRI-4202
220	300	110	88	2.5	1	660	1,550	67,500	158,000	CRI-4410
	340	90	80	4	1.5	595	1,060	61,000	108,000	413044E1
	340	113	90	4	1.5	880	1,650	89,500	168,000	423044E1
	340	158	130	4	1	1,340	2,750	137,000	281,000	CRI-4409
	340	164	130	3	1	1,360	2,810	139,000	287,000	CRI-4411
	370	120	107	5	1.5	1,110	1,920	113,000	196,000	413144
	370	150	120	5	1.5	1,220	2,260	125,000	230,000	423144
	370	150	120	5	1.5	1,440	2,550	147,000	260,000	CRI-4416

❶ Minimum allowable dimension for chamfer dimension r or r_1.

Double Row Tapered Roller Bearings (Outside Direction)

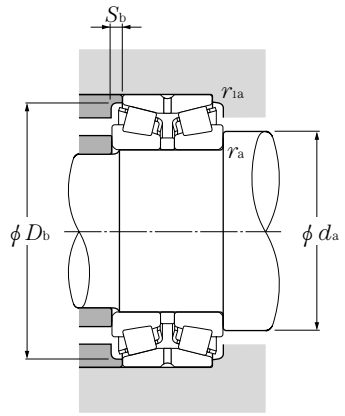

Equivalent bearing load

dynamic

$P_r = XF_r + YF_a$

$\frac{F_a}{F_r} \leqq e$		$\frac{F_a}{F_r} > e$	
X	Y	X	Y
1	Y_1	0.67	Y_2

static

$P_{or} = F_r + Y_o F_a$

For values of e, Y_2 and Y_o see the table below.

Abutment and fillet dimensions					Load center	Constant	Axial load factors			Mass
mm					mm					kg
d_a min	D_b min	S_b min	r_{as} max	r_{las} max	a	e	Y_1	Y_2	Y_o	(approx.)
198	279	12	3	1.5	119	0.37	1.80	2.69	1.76	31.4
194	281	15	2.5	1	125.5	0.26	2.55	3.80	2.50	43.7
202	297	14	4	1.5	139	0.45	1.50	2.23	1.47	39.4
202	305	20	4	1.5	165	0.45	1.50	2.23	1.47	60.6
198	302	20	3	1.5	142.5	0.32	2.12	3.15	2.07	68.5
204	271	4	2.5	1	96	0.37	1.80	2.69	1.76	16.2
204	272	9.5	2.5	1	104	0.37	1.80	2.69	1.76	19.6
208	300	6	3	1.5	119	0.40	1.68	2.50	1.64	30.8
208	299	13	3	1.5	126	0.37	1.80	2.69	1.76	38.6
212	316	14	4	1.5	141	0.44	1.55	2.31	1.52	45.4
212	323	22	4	1.5	174	0.44	1.55	2.31	1.52	73.3
212	323	22	4	1.5	185	0.49	1.38	2.06	1.35	75.8
214	288	4.5	2.5	1	101	0.37	1.80	2.69	1.76	20.6
214	291	10.5	2.5	1	112	0.37	1.80	2.69	1.76	25.7
212	296	14	2	1	141	0.37	1.80	2.69	1.76	38.2
218	296	15	3	1	138	0.33	2.03	3.02	1.98	42.4
218	299	18	3	1.5	160.5	0.52	1.31	1.95	1.28	40.1
218	314	20	3	1.5	161.5	0.42	1.60	2.39	1.57	55.5
218	320	6	3	1.5	125	0.40	1.68	2.50	1.64	38.6
218	316	14	3	1.5	134	0.37	1.80	2.69	1.76	47.5
214	324	17	2.5	1.5	149	0.32	2.12	3.15	2.07	67
222	336	16	4	1.5	154	0.44	1.55	2.31	1.52	62.8
222	340	22	4	1.5	180	0.41	1.66	2.47	1.62	95.2
222	340	22	4	1.5	193	0.49	1.38	2.06	1.35	90.7
220	275	9.5	2.5	0.6	134	0.52	1.31	1.95	1.28	16.9
224	331	6.5	2.5	1.5	130.5	0.40	1.68	2.50	1.64	44
232	289	11	2	1	121.5	0.39	1.74	2.59	1.70	21.1
238	318	5	3	1.5	112	0.37	1.80	2.69	1.76	26.7
238	319	11.5	3	1.5	125	0.37	1.80	2.69	1.76	33.3
238	324	14	3	1	138.5	0.33	2.03	3.02	1.98	46.7
234	323	17	2.5	1	145	0.35	1.95	2.90	1.91	48.5
242	346	6.5	4	1.5	135	0.40	1.68	2.50	1.64	47.8
242	341	15	4	1.5	154	0.40	1.68	2.50	1.64	59.6
242	346.5	15	4	1.5	142	0.35	1.95	2.90	1.91	59.0

Double Row Tapered Roller Bearings (Outside Direction)

Metric system sizes

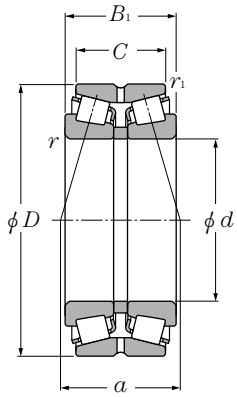

d 220～300mm

Boundary dimensions mm						Basic load ratings dynamic kN	static kN	dynamic kgf	static kgf	Bearing numbers
d	D	B_1	C	$r_{s\,min}$ ❶	$r_{ls\,min}$ ❶	C_r	C_{or}	C_r	C_{or}	
220	400	158	122	4	1.5	1,400	2,440	143,000	249,000	**430244**
	420	130	100	5	2.5	1,160	1,820	119,000	185,000	**CRI-4407**
230	380	175	115	4	2	1,540	2,890	157,000	295,000	**CRI-4612**
	380	200	160	4	2	1,740	3,700	178,000	380,000	**CRI-4606**
	400	188	136	8	1.5	1,620	3,250	165,000	330,000	**CRI-4605**
235	330	115	85	5	1.5	745	1,700	76,000	173,000	**CRI-4701**
240	320	110	90	2.5	1	795	1,890	81,000	193,000	**CRI-4813**
	360	92	82	4	1.5	655	1,160	66,500	118,000	**413048E1**
	360	115	92	4	1.5	910	1,770	92,500	181,000	**423048E1**
	360	164	130	3	1	1,420	3,050	145,000	310,000	**CRI-4806**
	360	170	142	3	1	1,360	2,810	139,000	287,000	**CRI-4805**
	400	128	114	5	1.5	1,230	2,130	126,000	217,000	**413148**
	400	160	128	5	1.5	1,400	2,600	142,000	265,000	**423148**
	400	209	168	4	1.5	2,140	4,350	218,000	445,000	**CRI-4807**
	440	165	127	4	1.5	1,680	2,960	171,000	300,000	**430248**
	440	266	212	4	1.5	2,920	5,500	298,000	560,000	**432248**
250	380	98	87	3	1.5	750	1,360	76,500	139,000	**CRI-5004**
260	400	104	92	5	1.5	840	1,540	85,500	157,000	**413052**
	400	130	104	5	1.5	1,150	2,190	117,000	223,000	**423052**
	400	185	146	4	1.5	1,720	3,650	175,000	370,000	**CRI-5218**
	440	144	128	5	1.5	1,500	2,630	152,000	268,000	**413152**
	440	172	145	4	2	1,960	3,750	200,000	380,000	**CRI-5224**
	440	180	144	5	1.5	1,960	3,750	200,000	380,000	**423152**
280	400	150	120	5	1.5	1,380	3,150	141,000	325,000	**CRI-5615**
	420	106	94	5	1.5	890	1,630	91,000	166,000	**413056**
	420	133	106	5	1.5	1,200	2,340	123,000	238,000	**423056**
	460	146	130	6	2	1,640	2,900	167,000	296,000	**413156**
	460	183	146	6	2	1,940	3,650	198,000	375,000	**423156**
290	400	120	90	4	1.5	1,200	2,600	122,000	265,000	**CRI-5808**
	430	150	135	4	1.5	1,350	3,200	138,000	325,000	**CRI-5810**
300	460	118	105	5	1.5	1,070	1,990	109,000	203,000	**413060**

❶ Minimum allowable dimension for chamfer dimension r or r_1.

Double Row Tapered Roller Bearings (Outside Direction)

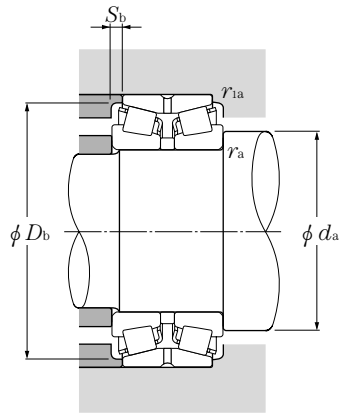

Equivalent bearing load

dynamic

$P_r = XF_r + YF_a$

$\frac{F_a}{F_r} \leqq e$		$\frac{F_a}{F_r} > e$	
X	Y	X	Y
1	Y_1	0.67	Y_2

static

$P_{or} = F_r + Y_o F_a$

For values of e, Y_2 and Y_o see the table below.

Abutment and fillet dimensions					Load center	Constant	Axial load factors			Mass
mm					mm					kg
d_a min	D_b min	S_b min	r_{as} max	r_{las} max	a	e	Y_1	Y_2	Y_o	(approx.)
238	368	18	3	1.5	178.5	0.49	1.38	2.06	1.40	77.5
242	378	15	4	2	148	0.40	1.68	2.50	1.64	73.1
248	359	30	3	2	154.5	0.40	1.68	2.50	1.64	67
248	355	20	3	2	164	0.33	2.03	3.02	1.98	84.4
266	367	26	6	1.5	181	0.44	1.54	2.29	1.50	88.5
257	312.5	15	4	1.5	129.5	0.41	1.66	2.47	1.62	27.3
252	314	10	2	1	139.5	0.46	1.47	2.19	1.44	21.6
258	339	5	3	1.5	117	0.37	1.80	2.69	1.76	30.2
258	339	11.5	3	1.5	131	0.37	1.80	2.69	1.76	36.5
254	356	17	2.5	1	145	0.32	2.12	3.15	2.07	53
254	347	14	2.5	1	161	0.37	1.80	2.69	1.76	53.8
262	375	7	4	1.5	144	0.40	1.68	2.50	1.64	58.9
262	373	16	4	1.5	164	0.40	1.68	2.50	1.64	71.7
258	376	20.5	3	1.5	167.5	0.32	2.12	3.15	2.07	96
258	406	19	3	1.5	189	0.49	1.38	2.06	1.35	100.4
258	421.5	27	3	1.5	226	0.43	1.57	2.34	1.53	164.8
264	357	5.5	2.5	1.5	123.5	0.37	1.80	2.69	1.80	35.3
282	372	6	4	1.5	131	0.37	1.80	2.69	1.76	41.5
282	374	13	4	1.5	143	0.37	1.80	2.69	1.76	53
278	376	19.5	3	1.5	154.5	0.29	2.32	3.45	2.26	79
282	412	8	4	1.5	161	0.40	1.68	2.50	1.64	82.2
278	416.5	13.5	3	1.5	175	0.40	1.68	2.50	1.64	99.0
282	413	18	4	1.5	176	0.40	1.68	2.50	1.64	101
302	383	15	4	1.5	161	0.39	1.70	2.59	1.70	53.8
302	394	6	4	1.5	136	0.37	1.80	2.69	1.76	47.2
302	397	13.5	4	1.5	148	0.37	1.80	2.69	1.76	57.3
308	435	8	5	2	168	0.40	1.68	2.50	1.64	87.4
308	433	18.5	5	2	177	0.40	1.68	2.50	1.64	109
308	386	15	3	1.5	154	0.42	1.62	2.42	1.59	40
308	407	7.5	3	1.5	162	0.39	1.74	2.59	1.70	72.7
322	428	6.5	4	1.5	151	0.37	1.80	2.69	1.76	65.6

Double Row Tapered Roller Bearings (Outside Direction)

Metric system sizes

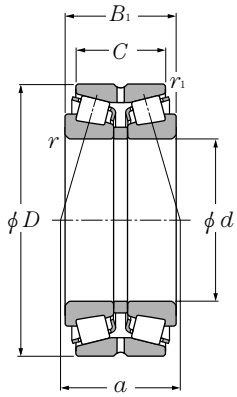

d 300～400mm

Boundary dimensions mm						Basic load ratings dynamic kN	static kN	dynamic kgf	static kgf	Bearing numbers
d	D	B_1	C	$r_{s\,min}$ ❶	$r_{ls\,min}$ ❶	C_r	C_{or}	C_r	C_{or}	
300	460	148	118	5	1.5	1,610	3,150	165,000	320,000	423060
	500	160	142	6	2	2,010	3,600	205,000	370,000	413160
	500	200	160	6	2	2,100	4,050	214,000	415,000	423160
	540	208	158	5	2.5	2,440	4,450	249,000	450,000	CRI-6010
320	480	121	108	5	1.5	1,190	2,250	121,000	229,000	413064
	480	151	121	5	1.5	1,580	3,100	162,000	315,000	423064
	540	176	157	6	2	2,240	4,100	228,000	415,000	413164
	540	220	176	6	2	2,500	4,900	255,000	500,000	423164
	550	240	180	5	2.5	3,300	6,500	340,000	665,000	☆CRI-6410
330	500	190	150	6	1.5	2,480	5,550	252,000	565,000	CRI-6603
340	460	160	128	3	1	1,630	4,250	167,000	430,000	CRI-6808
	500	249	203	5	1.5	2,690	6,200	274,000	630,000	CRI-6812
	520	133	118	6	2	1,480	2,870	150,000	293,000	413068
	520	165	133	6	2	1,890	3,750	193,000	380,000	423068
	580	190	169	6	2	2,690	4,900	274,000	500,000	413168
	580	238	190	6	2	3,350	6,500	345,000	660,000	423168
360	540	134	120	6	2	1,470	2,810	150,000	287,000	413072
	540	169	134	6	2	2,050	4,200	209,000	430,000	423072
	600	192	171	6	2	2,720	5,050	277,000	515,000	413172
	600	240	192	6	2	3,200	6,500	325,000	660,000	423172
380	508	139.7	88.9	6.4	1.5	920	2,270	94,000	232,000	CRI-7619
	560	135	122	6	2	1,690	3,350	172,000	340,000	413076
	560	171	135	6	2	2,080	4,350	213,000	445,000	423076
	620	194	173	6	2	2,840	5,250	289,000	535,000	413176
	620	241	170	5	2	3,700	7,400	380,000	755,000	CRI-7614
	620	243	194	6	2	3,350	6,700	340,000	685,000	423176
390	600	185	130	4	2	2,680	5,550	273,000	565,000	☆CRI-7803
400	540	140	100	6.4	1.5	1,620	3,800	165,000	390,000	CRI-8005
	600	148	132	6	2	1,860	3,700	190,000	375,000	413080
	600	185	148	6	2	2,530	5,450	258,000	555,000	423080
	650	200	178	6	3	3,000	5,800	305,000	590,000	413180
	650	250	200	6	3	3,750	7,850	385,000	800,000	423180

❶ Minimum allowable dimension for chamfer dimension r or r_1.

Remarks: 1. Bearing numbers marked "☆" designate bearing with hollow rollers and pin type cages.

Double Row Tapered Roller Bearings (Outside Direction)

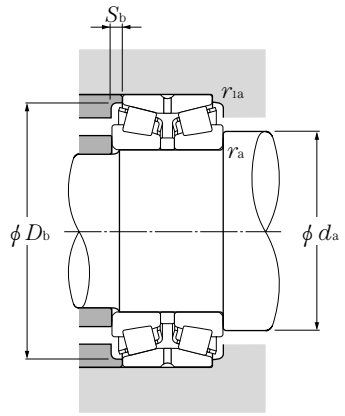

Equivalent bearing load

dynamic

$P_r = XF_r + YF_a$

$\frac{F_a}{F_r} \leqq e$		$\frac{F_a}{F_r} > e$	
X	Y	X	Y
1	Y_1	0.67	Y_2

static

$P_{or} = F_r + Y_o F_a$

For values of e, Y_2 and Y_o see the table below.

Abutment and fillet dimensions					Load center	Constant	Axial load factors			Mass
mm					mm					kg
d_a min	D_b min	S_b min	r_{as} max	r_{las} max	a	e	Y_1	Y_2	Y_o	(approx.)
322	434	15	4	1.5	163	0.37	1.80	2.69	1.76	80.2
328	471	9	5	2	182	0.40	1.68	2.50	1.64	115
328	467	20	5	2	202	0.40	1.68	2.50	1.64	144
322	498	25	4	2	238	0.49	1.38	2.06	1.35	184
342	449	6.5	4	1.5	157	0.37	1.80	2.69	1.76	70.9
342	455	15	4	1.5	170	0.37	1.80	2.69	1.76	85.4
348	505	9.5	5	2	197	0.40	1.68	2.50	1.64	150
348	504.5	22	5	2	217	0.40	1.68	2.50	1.64	186
342	514	30	4	2	233	0.40	1.68	2.50	1.64	223
358	477	20	5	1.5	195	0.39	1.74	2.59	1.70	117
354	441	16	2.5	1	161.5	0.32	2.12	3.15	2.07	70
362	481	23	4	1.5	218.5	0.33	2.03	3.02	1.98	154
368	488	7.5	5	2	170	0.37	1.80	2.69	1.76	89.2
368	489	16	5	2	184	0.37	1.80	2.69	1.76	113
368	548	10.5	5	2	213	0.40	1.68	2.50	1.64	188
368	542	24	5	2	237	0.40	1.68	2.50	1.64	235
388	507	7	5	2	176	0.37	1.80	2.69	1.76	98.2
388	509	17.5	5	2	192	0.37	1.80	2.69	1.76	120
388	561	10.5	5	2	219	0.40	1.68	2.50	1.64	199
388	563	24	5	2	240	0.40	1.68	2.50	1.64	248
408	483	25.5	5	1.5	221	0.53	1.27	1.89	1.24	69.5
408	528	6.5	5	2	183	0.37	1.80	2.69	1.76	95.9
408	529	18	5	2	196	0.37	1.80	2.69	1.76	126
408	583	10.5	5	2	225	0.40	1.68	2.50	1.64	210
402	582	35.5	4	2	263	0.46	1.47	2.19	1.44	252
408	578	24.5	5	2	249	0.40	1.68	2.50	1.64	262
408	564	27.5	3	2	216.5	0.40	1.70	2.50	1.66	175
428	519.5	20	5	1.5	216	0.48	1.41	2.09	1.37	80.6
428	564	8	5	2	194	0.37	1.80	2.69	1.76	105
428	564	18.5	5	2	210	0.37	1.80	2.69	1.76	163
428	610	11	5	2.5	232	0.40	1.68	2.50	1.64	236
428	610	25	5	2.5	256	0.40	1.68	2.50	1.64	294

Double Row Tapered Roller Bearings (Outside Direction)

Metric system sizes

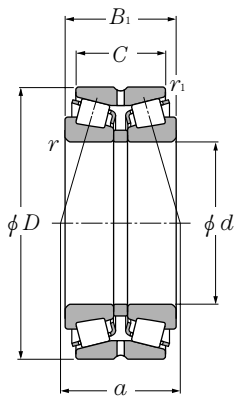

d 420～560mm

Boundary dimensions mm						Basic load ratings dynamic kN	static kN	dynamic kgf	static kgf	Bearing numbers
d	D	B_1	C	$r_{s\,min}$ ❶	$r_{ls\,min}$ ❶	C_r	C_{or}	C_r	C_{or}	
420	620	150	134	6	2	2,110	4,250	215,000	435,000	413084
	620	188	150	6	2	2,650	5,900	270,000	600,000	423084
	700	224	200	6	3	3,700	7,200	375,000	735,000	413184
	700	274	200	6	2.5	4,850	9,850	495,000	1,000,000	☆CRI-8403
	700	280	224	6	3	4,800	9,700	490,000	990,000	423184
440	650	157	140	6	3	2,470	5,150	252,000	525,000	413088
	650	196	157	6	3	2,600	5,450	266,000	560,000	423088
	720	226	201	6	3	4,000	7,800	410,000	795,000	413188
	720	283	226	6	3	5,000	10,300	510,000	1,050,000	423188
460	680	163	145	6	3	2,600	5,350	265,000	550,000	413092
	680	204	163	6	3	3,100	6,750	315,000	685,000	423092
	760	240	214	7.5	4	4,550	9,150	465,000	930,000	413192
	760	300	240	7.5	4	4,900	10,300	500,000	1,050,000	423192
480	700	165	147	6	3	2,490	5,000	254,000	510,000	413096
	700	206	165	6	3	3,050	6,700	310,000	685,000	423096
	790	248	221	7.5	4	4,800	9,600	490,000	975,000	413196
	790	310	248	7.5	4	5,300	11,100	540,000	1,130,000	423196
500	670	180	130	5	2	2,400	6,100	245,000	625,000	CRI-10004
	720	167	149	6	3	2,610	5,400	266,000	550,000	4130/500
	720	209	167	6	3	3,050	6,900	315,000	700,000	4230/500
	830	264	235	7.5	4	5,200	10,500	530,000	1,070,000	4131/500
	830	330	264	7.5	4	6,400	14,000	650,000	1,420,000	☆4231/500G2
530	780	185	163	6	3	2,910	5,900	297,000	600,000	4130/530
	780	231	185	6	3	4,050	9,050	415,000	920,000	4230/530
	870	272	239	7.5	4	6,000	12,200	615,000	1,240,000	☆4131/530G2
	870	340	272	7.5	4	7,750	16,700	790,000	1,710,000	☆4231/530AG2
560	735	225	180	6.4	1.5	3,150	8,800	325,000	895,000	CRI-11206
	740	190	140	6.4	1.5	2,360	6,250	241,000	640,000	CRI-11211
	820	195	173	6	3	3,600	7,850	370,000	800,000	☆CRI-11214
	820	244	195	6	3	4,750	11,000	485,000	1,120,000	☆CRI-11213
	920	280	246	7.5	4	5,900	12,100	600,000	1,230,000	4131/560
	920	350	280	7.5	4	7,600	17,400	775,000	1,780,000	☆4231/560G2

❶ Minimum allowable dimension for chamfer dimension r or r_1.

Remarks: 1. Bearing numbers marked "☆" designate bearing with hollow rollers and pin type cages.

Double Row Tapered Roller Bearings (Outside Direction)

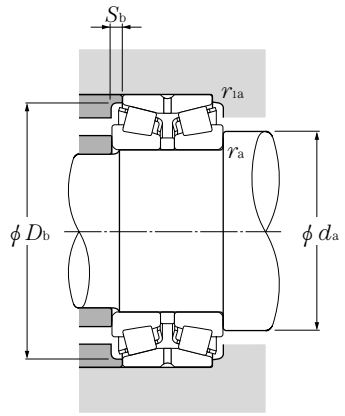

Equivalent bearing load

dynamic

$P_r = XF_r + YF_a$

$\frac{F_a}{F_r} \leqq e$		$\frac{F_a}{F_r} > e$	
X	Y	X	Y
1	Y_1	0.67	Y_2

static

$P_{or} = F_r + Y_o F_a$

For values of e, Y_2 and Y_o see the table below.

Abutment and fillet dimensions					Load center	Constant	Axial load factors			Mass
mm					mm					kg
d_a min	D_b min	S_b min	r_{as} max	r_{las} max	a	e	Y_1	Y_2	Y_o	(approx.)
448	586	8	5	2	200	0.37	1.80	2.69	1.76	135
448	583	19	5	2	220	0.37	1.80	2.69	1.76	172
448	655	12	5	2.5	258	0.40	1.68	2.50	1.64	317
448	649	37	5	2	245	0.32	2.12	3.15	2.07	387
448	659	28	5	2.5	287	0.40	1.68	2.50	1.64	394
468	618	8.5	5	2.5	208	0.37	1.80	2.69	1.76	160
468	614	19.5	5	2.5	229	0.37	1.80	2.69	1.76	198
468	675	12.5	5	2.5	263	0.40	1.68	2.50	1.64	330
468	678	28.5	5	2.5	288	0.40	1.68	2.50	1.64	412
488	646	9	5	2.5	217	0.37	1.80	2.69	1.76	179
488	644	20.5	5	2.5	239	0.37	1.80	2.69	1.76	225
496	714	13	6	3	276	0.40	1.68	2.50	1.64	395
496	712	30	6	3	305	0.40	1.68	2.50	1.64	493
508	665	9	5	2.5	223	0.37	1.80	2.69	1.76	189
508	664	20.5	5	2.5	246	0.37	1.80	2.69	1.76	236
516	743	13.5	6	3	281	0.40	1.68	2.50	1.64	442
516	738	31	6	3	329	0.40	1.68	2.50	1.64	548
522	637	25	4	2	242	0.40	1.68	2.50	1.64	175
528	686	9	5	2.5	230	0.37	1.80	2.69	1.76	202
528	683	21	5	2.5	250	0.37	1.80	2.69	1.76	247
536	780	14.5	6	3	296	0.40	1.68	2.50	1.64	528
536	773	33	6	3	331	0.40	1.68	2.50	1.64	678
558	740	11	5	2.5	250	0.37	1.80	2.69	1.76	265
558	738.5	23	5	2.5	276	0.37	1.80	2.69	1.76	331
566	820	16.5	6	3	303	0.38	1.77	2.64	1.73	620
566	822.5	34	6	3	340	0.39	1.74	2.59	1.70	774
588	709	22.5	5	1.5	257	0.35	1.95	2.90	1.91	232
588	705.5	25	5	1.5	231	0.34	1.98	2.94	1.93	198
588	777	11	5	2.5	277	0.39	1.74	2.59	1.70	340
588	774	24.5	5	2.5	272	0.33	2.03	3.02	1.98	415
596	865	17	6	3	326	0.40	1.68	2.50	1.64	1,310
596	865	35	6	3	362	0.40	1.68	2.50	1.64	894

Double Row Tapered Roller Bearings (Outside Direction)

Metric system sizes

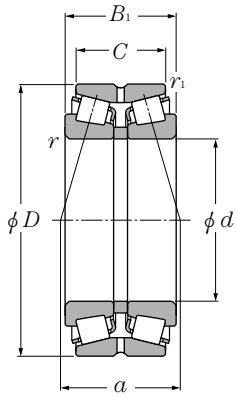

d 570～1,115mm

Boundary dimensions mm						Basic load ratings dynamic kN	static kN	dynamic kgf	static kgf	Bearing numbers
d	D	B_1	C	$r_{s\,min}$ ❶	$r_{ls\,min}$ ❶	C_r	C_{or}	C_r	C_{or}	
570	815	345	265	6	3	6,300	16,600	640,000	1,690,000	**CRI-11401**
590	780	255	178	5	2.5	3,900	10,500	400,000	1,070,000	**CRI-11801**
600	870	200	176	6	3	3,900	8,550	400,000	870,000	**4130/600**
	980	300	264	7.5	4	7,400	15,400	755,000	1,570,000	**☆4131/600G2**
	980	388	300	7.5	4	8,600	18,400	875,000	1,870,000	**☆4231/600G2**
670	830	180	145	4	1.5	3,050	9,150	310,000	935,000	**☆CRI-13402**
	880	185	130	4	2	3,500	9,100	360,000	930,000	**☆CRI-13401**
	1,090	336	295	7.5	4	9,250	19,700	945,000	2,010,000	**☆4131/670G2**
	1,090	392	336	7.5	4	10,500	24,800	1,070,000	2,530,000	**☆4231/670G2**
710	1,030	236	208	7.5	4	5,900	13,900	600,000	1,420,000	**☆4130/710G2**
	1,030	236	208	7.5	4	5,750	14,000	590,000	1,430,000	**☆CRI-14207**
	1,030	295	236	7.5	4	6,900	16,100	700,000	1,640,000	**☆CRI-14209**
800	1,150	350	256	7.5	4	9,350	24,200	955,000	2,470,000	**☆CRI-16001**
1,040	1,290	350	270	6	2.5	8,850	30,000	900,000	3,050,000	**☆CRI-20802**
1,115	1,460	300	220	5	2.5	8,200	24,000	835,000	2,450,000	**☆CRI-22303**

❶ Minimum allowable dimension for chamfer dimension r or r_1.
Remarks: 1. Bearing numbers marked "☆" designate bearing with hollow rollers and pin type cages.

Double Row Tapered Roller Bearings (Outside Direction)

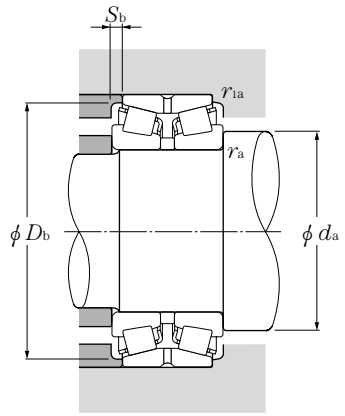

Equivalent bearing load

dynamic

$P_r = XF_r + YF_a$

$\frac{F_a}{F_r} \leqq e$		$\frac{F_a}{F_r} > e$	
X	Y	X	Y
1	Y_1	0.67	Y_2

static

$P_{or} = F_r + Y_o F_a$

For values of e, Y_2 and Y_o see the table below.

Abutment and fillet dimensions					Load center	Constant	Axial load factors			Mass
mm					mm					kg
d_a min	D_b min	S_b min	r_{as} max	r_{las} max	a	e	Y_1	Y_2	Y_o	(approx.)
598	781	40	5	2.5	318	0.35	1.95	2.90	1.91	512
612	754	38.5	4	2	288	0.39	1.74	2.59	1.70	291
628	828	12	5	2.5	277	0.37	1.80	2.69	1.76	348
636	925	18	6	3	350	0.40	1.68	2.50	1.64	858
636	923	44	6	3	380	0.38	1.77	2.64	1.73	1,050
688	809	17.5	3	1.5	283	0.40	1.68	2.50	1.64	201
688	845.5	27.5	3	2	317	0.45	1.51	2.25	1.48	277
706	1,033	20.5	6	3	397	0.40	1.68	2.50	1.64	1,180
706	1,021	28	6	3	397	0.37	1.80	2.69	1.76	1,410
746	974	14	6	3	327	0.37	1.80	2.69	1.76	640
746	974	14	6	3	324	0.36	1.87	2.79	1.83	654
746	982	29.5	6	3	362	0.39	1.73	2.58	1.69	810
836	1,092.5	47	6	3	400	0.37	1.80	2.69	1.76	1,119
1,068	1,260	40	5	2	472.3	0.40	1.68	2.50	1.64	975
1,137	1,396.5	40	4	2	554	0.47	1.43	2.12	1.40	1,255

Double Row Tapered Roller Bearings (Outside Direction)

Inch system sizes

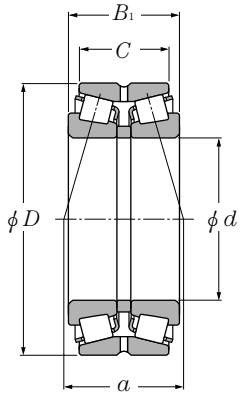

d 139.700 ～204.788mm

Boundary dimensions mm				Basic load ratings dynamic kN	static kN	dynamic kgf	static kgf	Bearing numbers
d	D	B_1	C	C_r	C_{or}	C_r	C_{or}	
139.700	307.975	200.025	155.575	1,740	2,780	177,000	283,000	T-HH234031/HH234011D+A
152.400	307.975	200.025	146.050	1,510	2,620	154,000	267,000	T-EE450601/451215D+A
	307.975	200.025	155.575	1,740	2,780	177,000	283,000	T-HH234048/HM234011D+A
160.325	288.925	142.875	111.125	1,160	2,140	119,000	218,000	T-HM237532/HM237510D+A
165.100	288.925	142.875	111.125	940	1,900	96,000	194,000	T-94649/94114D+A
	288.925	142.875	111.125	1,160	2,140	119,000	218,000	T-HM237535/HM237510D+A
174.625	288.925	142.875	111.125	940	1,900	96,000	194,000	T-94687/94114D+A
	288.925	142.875	111.125	1,160	2,140	119,000	218,000	T-HM237542/HM237510D+A
177.800	288.925	142.875	111.125	940	1,900	96,000	194,000	T-94700/94114D+A
	288.925	142.875	111.125	1,160	2,140	119,000	218,000	T-HM237545/HM237510D+A
	320.675	185.738	138.112	1,300	2,480	132,000	253,000	EE222070/222127D+A
	320.675	185.738	138.112	1,590	2,790	162,000	285,000	T-H239640/H239612D+A
187.325	282.575	107.950	79.375	625	1,230	63,500	126,000	T-87737/87112D+A
	320.675	185.738	138.112	1,590	2,790	162,000	285,000	T-H239649/H239612D+A
190.500	282.575	107.950	79.375	625	1,230	63,500	126,000	T-87750/87112D+A
	317.500	146.050	111.125	1,060	2,310	108,000	236,000	T-93750/93127D+A
	368.300	193.675	136.525	1,670	3,200	170,000	330,000	T-EE420751/421451D+A
193.675	282.575	107.950	79.375	625	1,230	63,500	126,000	T-87762/87112D+A
200.025	292.100	125.415	101.600	915	2,070	93,000	211,000	T-M241543/M241510D+A
	317.500	146.050	111.125	1,060	2,310	108,000	236,000	T-93787/93727D+A
	384.175	238.125	193.675	2,500	5,450	255,000	555,000	T-H247535/H247510D+A
203.200	276.225	90.485	73.025	585	1,380	60,000	141,000	LM241149/LM241110D+A
	282.575	101.600	82.550	620	1,570	63,000	160,000	T-67983/67920D+A
	292.100	125.415	101.600	915	2,070	93,000	211,000	T-M241547/M241510D+A
	317.500	146.050	111.125	1,060	2,310	108,000	236,000	T-93800/93127D+A
	368.300	193.675	136.525	1,670	3,200	170,000	330,000	T-EE420801/421451D+A
	406.400	196.850	127.000	1,650	2,950	168,000	300,000	EE114080/114161D+A
204.788	292.100	125.415	101.600	915	2,070	93,000	211,000	T-M241549/M241510D+A

Remarks: 1. The above chamfer of inner and outer ring are bigger than r_{as} max or r_{las} max.

Double Row Tapered Roller Bearings (Outside Direction)

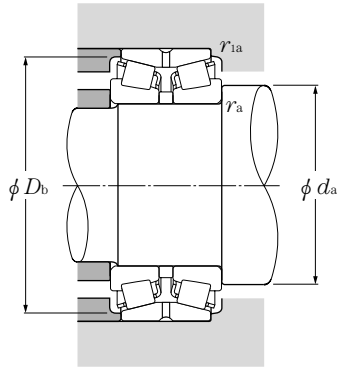

Equivalent bearing load

dynamic

$P_r = XF_r + YF_a$

$\frac{F_a}{F_r} \leqq e$		$\frac{F_a}{F_r} > e$	
X	Y	X	Y
1	Y_1	0.67	Y_2

static

$P_{or} = F_r + Y_o F_a$

For values of e, Y_2 and Y_o see the table below.

Abutment and fillet dimensions				Load center	Constant	Axial load factors			Mass
mm				mm					kg
d_a min	D_b max	r_{as} max	r_{las} max	a	e	Y_1	Y_2	Y_o	(approx.)
180	285	9.7	2.3	149.5	0.33	2.07	3.08	2.02	65.9
189	275	9.7	2.3	143.5	0.33	2.07	3.08	2.02	62.6
191	285	9.7	2.3	149.5	0.33	2.07	3.08	2.02	62.6
192	271	7	1.5	119.5	0.32	2.12	3.15	2.07	36.1
197	272	7	1.5	141	0.47	1.44	2.15	1.41	35.1
195	271	7	1.5	119.5	0.32	2.12	3.15	2.07	35.1
204	272	7	1.5	141	0.47	1.44	2.15	1.41	33.1
202	271	7	1.5	119.5	0.32	2.12	3.15	2.07	33.1
207	272	7	1.5	141	0.47	1.44	2.15	1.41	32.4
205	271	7	1.5	119.5	0.32	2.12	3.15	2.07	32.4
204	298	3.5	1.5	152.5	0.40	1.68	2.50	1.64	57.8
202	301	3.5	1.5	141	0.32	2.12	3.15	2.07	57.8
207	267	3.5	1.5	115.5	0.42	1.62	2.42	1.59	21.1
214	301	5.5	1.5	141	0.32	2.12	3.15	2.07	55
209	267	3.5	1.5	115.5	0.42	1.62	2.42	1.59	20.6
218	300	4.3	1.5	162	0.52	1.29	1.92	1.26	41.2
227	334.4	6.4	1.5	163	0.40	1.68	2.50	1.64	84.1
211	267	3.5	1.5	115.5	0.42	1.62	2.42	1.59	20
219	279	3.5	1.5	116	0.33	2.03	3.02	1.98	24.8
225	300	4.3	1.5	162	0.52	1.29	1.92	1.26	38.8
241	362	6.4	1.5	182	0.33	2.03	3.02	1.98	112
220	267	3.5	0.8	95	0.32	2.12	3.15	2.07	13.8
222	275	3.5	0.8	133.5	0.51	1.33	1.97	1.30	17.1
221	279	3.5	1.5	116	0.33	2.03	3.02	1.98	24.1
227	300	4.3	1.5	162	0.52	1.29	1.92	1.26	37.1
230	334.4	3.3	1.5	163	0.40	1.68	2.50	1.64	79.9
246	374	6.4	3.3	252.5	0.80	0.85	1.26	0.83	107
223	279	3.5	1.5	116	0.33	2.03	3.02	1.98	23.8

Double Row Tapered Roller Bearings (Outside Direction)

Inch system sizes

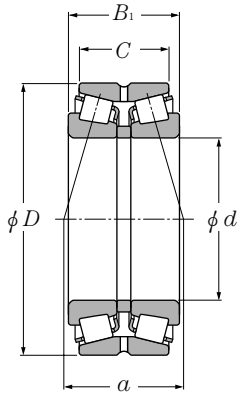

d 206.375～241.300mm

Boundary dimensions mm				Basic load ratings dynamic kN	static kN	dynamic kgf	static kgf	Bearing numbers
d	D	B_1	C	C_r	C_{or}	C_r	C_{or}	
206.375	282.575	101.600	82.550	620	1,570	63,000	160,000	T-67985/67920D+A
	336.550	211.138	169.862	1,900	4,050	194,000	415,000	T-H242649/H242610D+A
209.550	282.575	101.600	82.550	620	1,570	63,000	160,000	T-67989/67920D+A
	317.500	146.050	111.125	1,060	2,310	108,000	236,000	T-93825/93127D+A
212.725	285.750	98.425	76.200	650	1,640	66,500	167,000	T-LM742745/LM742710D+A
215.900	285.750	98.425	76.200	650	1,640	66,500	167,000	T-LM742749/LM742710D+A
	287.338	69.850	50.800	355	810	36,000	82,500	543085/543115D+A
220.662	314.325	131.762	106.362	1,070	2,450	109,000	250,000	T-M244249/M244210D+A
228.460	431.800	196.850	111.125	1,470	2,480	150,000	253,000	EE113091/113171D+A
228.600	327.025	114.300	82.550	815	1,900	83,000	194,000	T-8573/8520D+A
	355.600	152.400	111.125	1,100	2,540	112,000	259,000	T-96900/96140D+A
	355.600	152.400	111.125	1,230	2,510	125,000	256,000	T-EE130902/131401D+A
	355.600	152.400	114.300	1,230	2,490	126,000	254,000	HM746646/HM746610D+A
	358.775	152.400	117.475	1,390	3,300	142,000	335,000	T-M249732/M249710D+A
	400.050	187.325	136.525	1,620	3,250	165,000	330,000	EE430900/431576D+A
	488.950	254.000	152.400	2,700	4,550	275,000	460,000	☆T-HH949549/HH949510DG2+A
231.775	358.775	152.400	117.475	1,390	3,300	142,000	335,000	T-M249734/M249710D+A
234.950	311.150	98.425	73.025	695	1,640	71,000	167,000	LM446349/LM446310D+A
	327.025	114.300	82.550	815	1,900	83,000	194,000	T-8575/8520D+A
	355.600	152.400	111.125	1,100	2,540	112,000	259,000	T-96925/96140D+A
	384.175	238.125	193.675	2,500	5,450	255,000	555,000	T-H247549/H247510D+A
237.330	358.775	152.400	117.475	1,390	3,300	142,000	335,000	T-M249736/M249710D+A
241.300	327.025	114.300	82.550	815	1,900	83,000	194,000	T-8578/8520D+A
	349.148	127.000	101.600	940	2,010	96,000	205,000	EE127095/127136D+A
	368.300	120.650	85.725	790	1,630	80,500	166,000	EE170950/171450D+A
	393.700	157.162	109.538	1,340	2,800	137,000	286,000	T-EE275095/275156D+A
	406.400	215.900	184.150	2,460	4,750	251,000	485,000	T-H249148/H249111D+A
	444.500	209.550	158.750	2,380	4,250	243,000	430,000	☆T-EE923095/923176DG2+A

Remarks: 1. The above chamfer of inner and outer ring are bigger than r_{as} max or r_{las} max.
2. Bearing numbers marked "☆" designate bearing with hollow rollers and pin type cages.

Double Row Tapered Roller Bearings (Outside Direction)

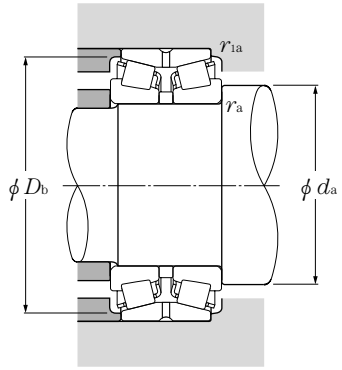

Equivalent bearing load

dynamic

$P_r = XF_r + YF_a$

$\frac{F_a}{F_r} \leqq e$		$\frac{F_a}{F_r} > e$	
X	Y	X	Y
1	Y_1	0.67	Y_2

static

$P_{or} = F_r + Y_o F_a$

For values of e, Y_2 and Y_o see the table below.

Abutment and fillet dimensions				Load center	Constant	Axial load factors			Mass
mm				mm					kg
d_a min	D_b max	r_{as} max	r_{las} max	a	e	Y_1	Y_2	Y_o	(approx.)
224	275	3.5	0.8	133.5	0.51	1.33	1.97	1.30	16.5
231	318	3.3	1.5	160	0.33	2.03	3.02	1.98	65.2
227	275	3.5	0.8	133.5	0.51	1.33	1.97	1.30	16
233	300	4.3	1.5	161	0.52	1.29	1.92	1.26	36.3
230	279	3.5	0.8	126.5	0.48	1.40	2.09	1.37	15.7
233	279	3.5	0.8	126.5	0.48	1.40	2.09	1.37	15.1
232	276	3.5	0.8	94.5	0.38	1.77	2.64	1.73	11
245	300	6.4	1.5	122.5	0.33	2.03	3.02	1.98	28.9
274	397	6.4	3.3	276	0.88	0.77	1.14	0.75	116
255	313	6.4	1.5	129.5	0.41	1.66	2.47	1.62	27.3
260	334	7	1.5	185	0.59	1.14	1.70	1.12	49.4
257	330	6.8	1.5	132.5	0.33	2.04	3.04	2.00	49.4
258	339	6.4	1.5	164	0.47	1.43	2.12	1.40	49.4
256	343	3.5	1.5	138.5	0.33	2.03	3.02	1.98	50.9
271	367	10.5	1.5	181.5	0.44	1.54	2.29	1.50	88.3
297	456	6.4	1.5	333.5	0.94	0.72	1.07	0.70	207
263	343	6.4	1.5	138.5	0.33	2.03	3.02	1.98	50
252	301	3.5	0.8	111.5	0.36	1.86	2.77	1.82	17.9
259	313	6.4	1.5	129.5	0.41	1.66	2.47	1.62	25.9
265	334	7	1.5	185	0.59	1.14	1.70	1.12	47.5
269	362	6.4	1.5	181.5	0.33	2.03	3.02	1.98	96.2
267	343	6.4	1.5	138.5	0.33	2.03	3.02	1.98	48.2
264	313	6.4	1.5	129.5	0.41	1.66	2.47	1.62	24.3
267	329	6.4	1.5	133	0.35	1.91	2.85	1.87	35.4
269	337	6.4	1.5	132.5	0.36	1.85	2.76	1.81	40.8
278	378.1	6.4	1.5	162	0.40	1.68	2.50	1.64	66.5
273	385	6.4	1.5	177.5	0.33	2.03	3.02	1.98	101
277	407	6.4	1.5	170.5	0.34	2.00	2.98	1.96	128

Double Row Tapered Roller Bearings (Outside Direction)

Inch system sizes

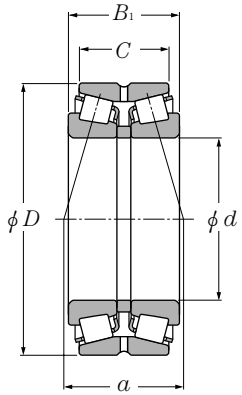

d 244.475～280.192mm

Boundary dimensions mm				Basic load ratings dynamic kN	static kN	dynamic kgf	static kgf	Bearing numbers
d	D	B_1	C	C_r	C_{or}	C_r	C_{or}	
244.475	381.000	171.450	127.000	1,300	2,880	132,000	294,000	**EE126097/126151D+A**
247.650	368.300	120.650	85.725	790	1,630	80,500	166,000	**EE170975/171451D+A**
	406.400	247.650	203.200	2,830	6,000	289,000	615,000	**HH249949/HH249910D+A**
249.250	381.000	171.450	127.000	1,300	2,880	132,000	294,000	**EE126098/126151D+A**
254.000	323.850	63.500	50.800	216	635	22,000	64,500	**29875/29820D+A**
	358.775	152.400	117.475	1,390	3,300	142,000	335,000	**T-M249749/M249710D+A**
	365.125	130.175	98.425	1,050	2,380	107,000	243,000	**T-EE134100/134144D+A**
	393.700	157.162	109.538	1,340	2,800	137,000	286,000	**T-EE275100/275156D+A**
	422.275	178.592	139.700	2,000	3,600	204,000	365,000	**T-HM252343/HM252310D+A**
	533.400	276.225	165.100	2,880	5,200	293,000	530,000	**HH953749/HH953710D+A**
260.350	365.125	130.175	98.425	1,050	2,380	107,000	243,000	**T-EE134102/134144D+A**
	400.050	155.575	107.950	1,220	2,460	124,000	251,000	**EE221026/221576D+A**
	419.100	184.150	136.525	1,580	3,250	161,000	330,000	**EE435102/435165D+A**
	422.275	178.592	139.700	2,000	3,600	204,000	365,000	**T-HM252348/HM252310D+A**
	488.950	254.000	196.850	3,000	5,950	310,000	605,000	**EE295102/295192D+A**
263.525	355.600	127.000	101.600	1,070	2,670	110,000	272,000	**T-LM451345/LM451310D+A**
266.700	323.850	63.500	50.800	216	635	22,000	64,500	**29880/29820D+A**
	355.600	127.000	101.600	1,070	2,670	110,000	272,000	**T-LM451349/LM451310D+A**
	393.700	157.162	109.538	1,340	2,800	137,000	286,000	**T-EE275105/275156D+A**
269.875	381.000	158.750	123.825	1,520	3,600	155,000	365,000	**T-M252349/M252310D+A**
273.050	393.700	157.162	109.538	1,340	2,800	137,000	286,000	**T-EE275108/275156D+A**
279.400	374.650	104.775	79.375	810	2,020	82,500	206,000	**L555233/L555210D+A**
	469.900	200.025	149.225	2,030	4,350	207,000	445,000	**EE722110/722186D+A**
	488.950	254.000	196.850	3,000	5,950	310,000	605,000	**EE295110/295192D+A**
279.982	380.898	139.700	107.950	1,140	3,100	116,000	315,000	**T-LM654642/LM654610D+A**
280.192	406.400	149.225	117.475	1,310	3,100	133,000	315,000	**EE128111/128160D+A**

Remarks: 1. The above chamfer of inner and outer ring are bigger than r_{as} max or r_{las} max.

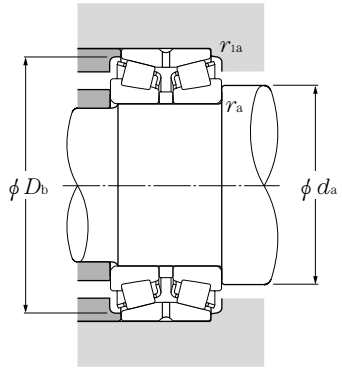

Equivalent bearing load

dynamic

$P_r = XF_r + YF_a$

$\frac{F_a}{F_r} \leqq e$		$\frac{F_a}{F_r} > e$	
X	Y	X	Y
1	Y_1	0.67	Y_2

static

$P_{or} = F_r + Y_o F_a$

For values of e, Y_2 and Y_o see the table below.

Abutment and fillet dimensions				Load center	Constant	Axial load factors			Mass
mm				mm					kg
d_a min	D_b max	r_{as} max	r_{las} max	a	e	Y_1	Y_2	Y_o	(approx.)
275	358	6.4	1.5	186.5	0.52	1.31	1.95	1.28	64
274	337	6.4	1.5	132.5	0.36	1.85	2.76	1.81	39.2
284	383	6.4	1.5	189.5	0.33	2.03	3.02	1.98	112
279	358	6.4	1.5	186.5	0.52	1.31	1.95	1.28	62.2
267	312	1.5	0.8	105	0.35	1.95	2.90	1.91	11.2
274	343	3.5	1.5	138.5	0.33	2.03	3.02	1.98	42.8
281	347	6.4	1.5	140	0.37	1.80	2.69	1.76	39.2
287	378	6.4	1.5	162.5	0.40	1.68	2.50	1.64	62.2
287	400	6.8	1.5	160	0.33	2.03	3.02	1.98	88.9
328	496	6.4	1.5	365.5	0.94	0.71	1.06	0.70	266
286	347	6.4	1.5	140	0.37	1.80	2.69	1.76	37.3
296	372	9.7	1.5	159	0.39	1.71	2.54	1.67	62.7
295	395	6.4	1.5	225.5	0.61	1.11	1.66	1.09	86.8
292	400	6.8	1.5	160	0.33	2.03	3.02	1.98	86.3
299	451	6.4	1.5	196.5	0.31	2.16	3.22	2.12	190
283	343	3.5	1.5	136.5	0.36	1.87	2.79	1.83	31.7
277	312	1.5	0.8	105	0.35	1.95	2.90	1.91	9.37
285	343	3.5	1.5	136.5	0.36	1.87	2.79	1.83	30.7
296	378	6.4	1.5	162.5	0.40	1.68	2.50	1.64	57.6
296	364	6.4	1.5	146.5	0.33	2.03	3.02	1.98	52.3
301	378	6.4	1.5	162.5	0.40	1.68	2.50	1.64	55.3
300	362	3.5	1.5	138.5	0.40	1.68	2.50	1.64	28.5
321	433	9.7	1.5	187.5	0.38	1.78	2.65	1.74	125
303	451	1.3	1.5	196.5	0.31	2.16	3.22	2.12	179
302	368	3.5	1.5	163	0.43	1.56	2.33	1.53	40.7
309	384	6.8	1.5	158	0.39	1.75	2.61	1.71	56.5

Double Row Tapered Roller Bearings (Outside Direction)

Inch system sizes

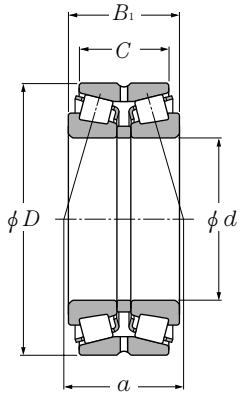

d 285.750～355.600mm

Boundary dimensions mm				Basic load ratings dynamic kN	static kN	dynamic kgf	static kgf	Bearing numbers
d	D	B_1	C	C_r	C_{or}	C_r	C_{or}	
285.750	358.775	76.200	53.975	450	1,080	46,000	110,000	545112/545142DA+A
	380.898	139.700	107.950	1,140	3,100	116,000	315,000	T-LM654649/LM654610D+A
	501.650	203.200	120.650	1,960	3,700	200,000	375,000	EE147112/147198D+A
288.925	406.400	165.100	130.175	1,740	4,150	177,000	425,000	M255449/M255410DA+A
292.100	374.650	104.775	79.375	810	2,020	82,500	206,000	L555249/L555210D+A
	469.900	200.025	149.225	2,030	4,350	207,000	445,000	EE722115/722186D+A
298.450	444.500	146.050	98.425	1,080	2,300	110,000	234,000	EE291175/291751D+A
299.974	495.300	301.625	247.650	4,200	9,800	425,000	1,000,000	☆HH258248/HH258210DG2+A
300.038	422.275	174.625	136.525	1,950	4,800	198,000	490,000	☆T-HM256849/HM256810DG2+A
304.800	393.700	107.950	82.550	835	2,070	85,500	211,000	L357049/L357010D+A
	438.048	165.100	120.650	1,380	3,200	141,000	325,000	T-EE129120X/129120D+A
	444.500	146.050	98.425	1,080	2,300	110,000	234,000	EE291201/291751D+A
	495.300	196.850	146.050	2,120	4,700	216,000	480,000	EE724120/724196D+A
317.500	444.500	146.050	98.425	1,080	2,300	110,000	234,000	EE291250/291751D+A
	447.675	180.975	146.050	1,990	4,800	203,000	485,000	T-HM259049/HM259010D+A
	622.300	304.800	174.625	3,250	6,250	330,000	640,000	☆H961649/H961610DG2+A
330.200	482.600	133.350	88.900	1,200	2,870	122,000	293,000	T-EE161300/161901D+A
	482.600	177.800	127.000	1,640	3,950	167,000	400,000	EE526130/526191D+A
333.375	469.900	190.500	152.400	2,320	5,500	237,000	565,000	HM261049/HM261010DA+A
342.900	457.098	142.875	104.775	1,210	3,300	124,000	335,000	LM961548/LM961511D+A
	533.400	165.100	114.300	1,830	3,450	187,000	355,000	EE971354/972102D+A
346.075	482.600	133.350	88.900	1,200	2,870	122,000	293,000	T-EE161363/161901D+A
	488.950	200.025	158.750	2,540	6,400	259,000	650,000	☆T-HM262749/HM262710DG2+A
349.250	514.350	193.675	152.400	2,040	4,550	209,000	465,000	EE333137/333203D+A
355.600	444.500	136.525	111.125	1,120	3,500	114,000	355,000	T-L163149/L163110D+A
	482.600	133.350	88.900	1,200	2,870	122,000	293,000	T-EE161400/161901D+A

Remarks: 1. The above chamfer of inner and outer ring are bigger than r_{as} max or r_{las} max.
2. Bearing numbers marked "☆" designate bearing with hollow rollers and pin type cages.

Double Row Tapered Roller Bearings (Outside Direction)

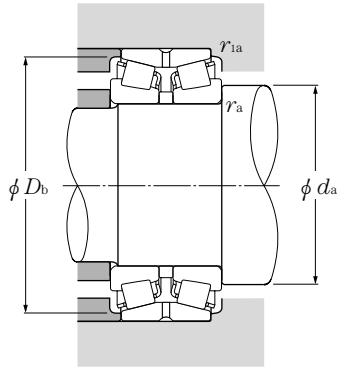

Equivalent bearing load

dynamic

$P_r = XF_r + YF_a$

$\frac{F_a}{F_r} \leqq e$		$\frac{F_a}{F_r} > e$	
X	Y	X	Y
1	Y_1	0.67	Y_2

static

$P_{or} = F_r + Y_o F_a$

For values of e, Y_2 and Y_o see the table below.

Abutment and fillet dimensions				Load center	Constant	Axial load factors			Mass
mm				mm					kg
d_a min	D_b max	r_{as} max	r_{las} max	a	e	Y_1	Y_2	Y_o	(approx.)
302	345	3.5	1.5	144	0.49	1.38	2.05	1.34	15.7
306	368	3.5	1.5	163	0.43	1.56	2.33	1.53	38.7
329	468	6.4	3.3	307	0.84	0.81	1.20	0.79	151
316	388	6.4	1.5	157	0.34	2.00	2.98	1.96	59
309	362	3.5	1.5	138.5	0.40	1.68	2.50	1.64	25.2
330	433	9.7	1.5	187.5	0.38	1.78	2.65	1.74	118
332	414	8	1.5	164	0.38	1.78	2.65	1.74	69.3
342	467	6.4	1.5	231	0.33	2.03	3.02	1.98	205
328	403	6.4	1.5	163.5	0.34	2.00	2.99	1.96	67.4
329	380	6.4	1.5	133	0.36	1.87	2.79	1.83	29.3
334	411	6.4	1.5	179.5	0.42	1.62	2.42	1.59	71.4
337	414	8	1.5	164	0.38	1.78	2.65	1.74	66.8
359	459	16	1.5	195	0.40	1.68	2.50	1.64	131
346	414	8	1.5	164	0.38	1.78	2.65	1.74	61.8
341	428	3.5	1.5	162	0.33	2.02	3.00	1.97	78.8
410	582	14.3	3.3	430	0.95	0.71	1.06	0.70	382
367	455	7	1.5	200.5	0.50	1.35	2.01	1.32	72.2
360	454	6.4	1.5	183.5	0.39	1.72	2.56	1.68	96.3
363	449	6.4	1.5	179.5	0.33	2.02	3.00	1.97	91.3
367	443.1	3.3	1.5	253.5	0.71	0.95	1.41	0.93	57.1
373	496	4.8	1.5	170	0.33	2.03	3.02	1.98	120
379	455	7	1.5	200.5	0.50	1.35	2.01	1.32	66
377	467	6.4	1.5	187.5	0.33	2.02	3.00	1.97	104
382	478	6.4	1.5	197.5	0.36	1.85	2.76	1.81	121
374	430	3.5	1.5	151	0.31	2.20	3.27	2.15	42.5
386	455	7	1.5	200.5	0.50	1.35	2.01	1.32	62.1

Double Row Tapered Roller Bearings (Outside Direction)

Inch system sizes

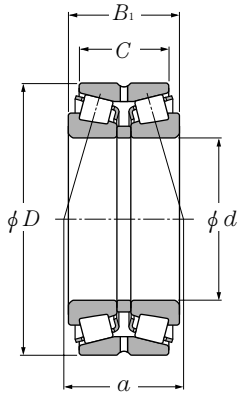

d 355.600～482.600mm

Boundary dimensions mm				Basic load ratings dynamic kN	static kN	dynamic kgf	static kgf	Bearing numbers
d	D	B_1	C	C_r	C_{or}	C_r	C_{or}	
355.600	501.650	155.575	107.950	1,550	3,650	158,000	375,000	T-EE231400/231976D+A
	514.350	193.675	152.400	2,040	4,550	209,000	465,000	EE333140/333203D+A
368.249	523.875	214.312	169.862	2,610	6,550	266,000	665,000	☆HM265049/HM265010DG2+A
371.475	501.650	155.575	107.950	1,550	3,650	158,000	375,000	T-EE231462/231976D+A
381.000	508.000	139.700	88.900	920	2,270	94,000	232,000	EE192150/192201D+A
	546.100	222.250	177.800	2,950	7,350	300,000	750,000	T-HM266446/HM266410D+A
	590.550	244.475	193.675	3,650	9,450	375,000	965,000	☆T-M268730/M268710DG2+A
384.175	441.325	68.262	52.388	360	1,060	36,500	108,000	LL365340/LL365310D+A
	546.100	222.250	177.800	2,950	7,350	300,000	750,000	T-HM266448/HM266410D+A
	546.100	222.250	177.800	3,150	8,050	320,000	820,000	☆T-HM266449/HM266410DG2+A
385.762	514.350	177.800	139.700	2,120	5,550	216,000	565,000	LM665949/LM665910D+A
396.875	539.750	142.875	101.600	1,330	3,300	136,000	335,000	EE234156/234213D+A
	546.100	158.750	117.475	1,330	3,300	136,000	335,000	EE234156/234216D+A
406.400	539.750	142.875	101.600	1,330	3,300	136,000	335,000	EE234160/234213D+A
	609.600	187.325	123.825	2,110	4,650	215,000	475,000	EE911600/912401D+A
415.925	590.550	244.475	193.675	3,650	9,450	375,000	965,000	☆T-M268749/M268710DG2+A
431.800	571.500	155.575	111.125	1,880	4,950	191,000	505,000	T-LM869448/LM869410D+A
	603.250	159.639	104.775	1,670	4,100	171,000	420,000	EE241701/242377D+A
	673.100	192.639	127.000	2,560	5,350	261,000	545,000	EE571703/572651D+A
447.675	635.000	257.175	206.375	4,150	11,100	425,000	1,130,000	☆M270749/M270710DAG2+A
457.200	596.900	165.100	120.650	1,670	4,700	170,000	480,000	EE244180/244236D+A
	730.148	254.000	177.800	4,350	8,750	445,000	895,000	EE671801/672875D+A
479.425	679.450	276.225	222.250	4,900	13,000	500,000	1,320,000	☆T-M272749/M272710DG2+A
482.600	615.950	184.150	146.050	2,320	6,700	237,000	685,000	☆LM272249/LM272210DG2+A
	634.873	177.800	142.875	2,000	6,150	204,000	630,000	EE243190/243251D+A

Remarks: 1. The above chamfer of inner and outer ring are bigger than r_{as} max or r_{las} max.
2. Bearing numbers marked "☆" designate bearing with hollow rollers and pin type cages.

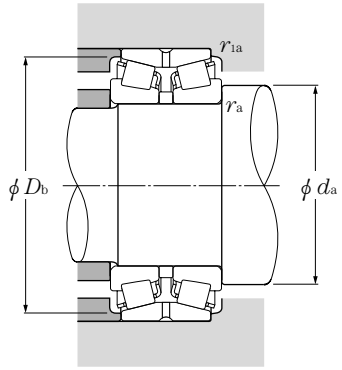

Equivalent bearing load

dynamic

$P_r = XF_r + YF_a$

$\frac{F_a}{F_r} \leqq e$		$\frac{F_a}{F_r} > e$	
X	Y	X	Y
1	Y_1	0.67	Y_2

static

$P_{or} = F_r + Y_o F_a$

For values of e, Y_2 and Y_o see the table below.

Abutment and fillet dimensions				Load center	Constant	Axial load factors			Mass
mm				mm					kg
d_a min	D_b max	r_{as} max	r_{las} max	a	e	Y_1	Y_2	Y_o	(approx.)
388	481	6.4	1.5	195	0.44	1.53	2.28	1.50	85.2
387	478	6.4	1.5	197.5	0.36	1.85	2.76	1.81	117
400	499	6.4	1.5	198.5	0.33	2.03	3.02	1.98	142
400	481	6.4	1.5	195	0.44	1.53	2.28	1.50	77.3
410	482	6.4	1.5	221	0.53	1.27	1.89	1.24	69
415	519	6.4	1.5	208	0.33	2.03	3.02	1.98	149
425	561	6.4	1.5	226	0.33	2.03	3.02	1.98	247
399	433	3.5	0.8	128.5	0.34	1.99	2.96	1.94	14.1
417	519	6.4	1.5	208	0.33	2.03	3.02	1.98	146
417	520	6.4	1.5	208	0.33	2.03	3.02	1.98	146
415	495	6.4	1.5	210.5	0.42	1.61	2.40	1.58	90
428	516	6.4	1.5	214.5	0.47	1.43	2.12	1.40	83.6
428	516	6.4	1.5	230.5	0.47	1.43	2.12	1.40	97.7
435	518	6.4	1.5	214.5	0.47	1.43	2.12	1.40	78.8
443	570	6.8	1.5	209	0.38	1.76	2.62	1.72	169
451	561	6.4	1.5	226	0.33	2.03	3.02	1.98	188
457	549	3.3	1.5	255.5	0.55	1.24	1.84	1.21	95.3
446	561	6.4	1.5	252.5	0.53	1.28	1.91	1.25	124
472	630	6.4	1.5	235.5	0.40	1.68	2.50	1.64	225
484	606	6.4	1.5	240	0.33	2.03	3.02	1.98	228
494	570	9.7	1.5	219	0.40	1.67	2.49	1.63	106
507	681	9.7	1.5	266	0.39	1.72	2.56	1.68	360
516	648	6.4	1.5	258.5	0.33	2.03	3.02	1.98	310
513	597	6.4	1.5	206.5	0.33	2.03	3.02	1.98	118
516	609	6.4	1.5	215	0.34	1.98	2.94	1.93	148

Double Row Tapered Roller Bearings (Outside Direction)

Inch system sizes

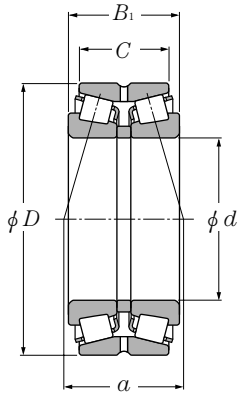

d 488.950～1,270.000mm

Boundary dimensions mm				Basic load ratings dynamic kN	static kN	dynamic kgf	static kgf	Bearing numbers
d	D	B_1	C	C_r	C_{or}	C_r	C_{or}	
488.950	634.873	180.975	136.525	2,500	6,950	255,000	710,000	LM772748/LM772710DA+A
	660.400	206.375	158.750	3,150	8,050	320,000	820,000	☆T-EE640192/640261DG2+A
489.026	634.873	177.800	142.875	2,000	6,150	204,000	630,000	EE243192/243251D+A
498.475	634.873	177.800	142.875	2,000	6,150	204,000	630,000	EE243196/243251D+A
508.000	838.200	304.800	222.250	5,450	12,800	555,000	1,310,000	EE426200/426331D+A
533.400	812.800	269.875	187.325	4,450	10,400	455,000	1,060,000	EE626210/626321D+A
536.575	761.873	311.150	247.650	5,900	15,200	600,000	1,550,000	☆M276449/M276410DG2+A
549.275	692.150	174.625	136.525	2,320	6,950	236,000	710,000	L476549/L476510D+A
558.800	736.600	165.100	114.300	2,050	5,400	209,000	550,000	EE542220/542291D+A
	736.600	187.328	138.112	2,500	6,750	255,000	690,000	EE843220/843291D+A
	736.600	225.425	177.800	3,150	8,800	325,000	895,000	LM377449/LM377410D+A
571.500	812.800	333.375	263.525	6,950	18,300	710,000	1,870,000	☆M278749/M278710DAG2+A
609.600	787.400	206.375	158.750	3,750	10,100	380,000	1,030,000	☆EE649240/649311DG2+A
	812.800	190.500	146.050	2,860	7,850	292,000	800,000	EE743240/743321D+A
660.400	812.800	203.200	158.750	3,250	10,300	330,000	1,060,000	L281148/L281110DA+A
711.200	914.400	190.500	139.700	3,100	8,950	315,000	910,000	☆EE755280/755361DG2+A
723.900	914.400	187.325	139.700	3,100	8,950	315,000	910,000	☆EE755285/755361DG2+A
977.900	1,130.300	139.700	101.600	2,050	7,200	209,000	735,000	LL687949/LL687910D+A
1,270.000	1,435.100	146.050	101.600	2,730	10,100	278,000	1,030,000	LL889049/LL889010D+A

Remarks: 1. The above chamfer of inner and outer ring are bigger than r_{as} max or r_{las} max.
2. Bearing numbers marked "☆" designate bearing with hollow rollers and pin type cages.

Double Row Tapered Roller Bearings (Outside Direction)

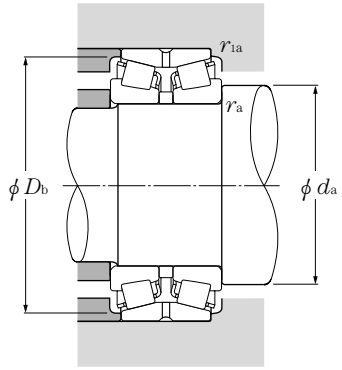

Equivalent bearing load

dynamic

$P_r = XF_r + YF_a$

$\frac{F_a}{F_r} \leqq e$		$\frac{F_a}{F_r} > e$	
X	Y	X	Y
1	Y_1	0.67	Y_2

static

$P_{or} = F_r + Y_o F_a$

For values of e, Y_2 and Y_o see the table below.

Abutment and fillet dimensions				Load center	Constant	Axial load factors			Mass
mm				mm					kg
d_a min	D_b max	r_{as} max	r_{las} max	a	e	Y_1	Y_2	Y_o	(approx.)
522	613	6.4	1.5	262	0.47	1.43	2.12	1.40	130
522	627	6.4	1.5	216	0.31	2.20	3.27	2.15	178
522	609	6.4	1.5	215	0.34	1.98	2.94	1.93	140
528	609	6.4	1.5	215	0.34	1.98	2.94	1.93	129
564	768	9.7	3.3	357	0.48	1.41	2.09	1.37	592
585	762	9.7	3.3	322.5	0.44	1.52	2.26	1.49	444
576	726	6.4	1.5	290	0.33	2.03	3.02	1.98	398
579	666	6.4	1.5	239	0.38	1.79	2.67	1.75	135
594	705	6.4	3.3	298	0.51	1.32	1.96	1.29	166
591	708	6.4	1.5	231	0.34	1.98	2.94	1.93	189
594	708	6.4	1.5	256.5	0.35	1.95	2.90	1.91	227
615	774	6.4	1.5	308	0.33	2.03	3.02	1.98	487
642	764	6.4	1.5	254	0.33	2.03	3.02	1.98	235
645	765	6.4	3.3	254	0.33	2.06	3.06	2.01	241
693	789	6.4	1.5	667.5	0.37	1.80	2.69	1.76	199
750	876	6.4	3.3	295.5	0.38	1.77	2.64	1.73	275
756	876	5.5	3.3	295.5	0.38	1.77	2.64	1.73	256
1,010	1,100	6.4	3.3	376	0.44	1.54	2.30	1.51	196
1,305	1,400	6.4	3.3	586.5	0.58	1.17	1.75	1.15	285

Double Row Tapered Roller Bearings (Inside Direction)

Metric system sizes

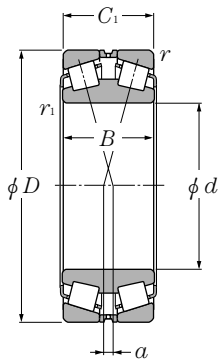

d 100～180mm

Boundary dimensions mm						Basic load ratings dynamic kN	static kN	dynamic kgf	static kgf	Bearing numbers
d	D	B	C_1	$r_{s\,min}$ ❶	$r_{ls\,min}$ ❶	C_r	C_{or}	C_r	C_{or}	
100	250	116	116	4	4	790	1,050	80,500	107,000	**CRD-2051**
105	170	90	90	2.5	2.5	420	860	42,500	87,500	**CRD-2151**
110	180	56	56	2	2.5	298	485	30,500	49,500	**323122**
	190	102	98	3	1.5	515	950	52,500	96,500	**CRD-2252**
	200	82	82	2.5	1	555	865	56,500	88,500	**CRD-2254**
120	170	120	120	2	2	415	890	42,500	91,000	**CRD-2421**
	180	46	46	2	2.5	230	375	23,500	38,000	**323024**
	200	62	62	2	2.5	370	610	38,000	62,500	**323124**
	215	113	113	2.5	2.5	735	1,300	75,000	133,000	**CRD-2420**
	280	150	140	3	3	1,130	1,840	115,000	187,000	**CRD-2422**
130	190	120	120	1.5	1.5	415	840	42,000	85,500	**CRD-2652**
	195	120	120	2.5	1.5	475	1,040	48,500	106,000	**CRD-2654**
	200	52	52	2	2.5	294	490	29,900	50,000	**323026**
	210	64	64	2	2.5	410	675	42,000	69,000	**323126**
140	210	53	53	2	2.5	300	535	30,500	54,500	**323028**
	225	68	68	2.5	3	390	650	40,000	66,000	**323128**
150	225	56	56	2.5	3	355	630	36,000	64,500	**323030**
	250	80	80	2.5	3	600	1,040	61,500	106,000	**323130**
	250	110	110	2.5	2.5	855	1,590	87,500	162,000	**CRD-3052**
160	240	60	60	2.5	3	430	765	44,000	78,000	**323032**
	240	110	110	2.5	2.5	750	1,560	76,500	159,000	**CRD-3254**
	260	130	130	3	1.5	880	1,740	89,500	178,000	**CRD-3253**
	270	86	86	2.5	3	675	1,180	69,000	120,000	**323132E1**
	270	116	116	2.5	2.5	835	1,640	85,500	167,000	**CRD-3208**
170	260	67	67	2.5	3	490	865	50,000	88,000	**323034**
	280	76	76	2.5	2.5	550	900	56,000	92,000	**CRD-3413**
	280	88	88	2.5	3	725	1,270	74,000	130,000	**323134E1**
177.000	248.000	90.488	90.488	3.3	1.57	515	1,180	52,500	120,000	＊**CRD-3502**
180	280	74	74	2.5	3	580	1,050	59,500	107,000	**323036E1**

❶ Minimum allowable dimension for chamfer dimension r or r_1. ❷ "—" means the load center is out side the inner ring.
Remarks: 1. The marked "＊" bearings are inch system sizes.

Double Row Tapered Roller Bearings (Inside Direction)

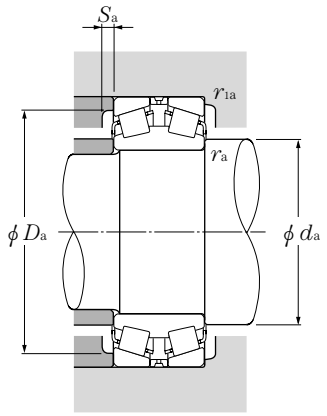

Equivalent bearing load

dynamic

$P_r = XF_r + YF_a$

$\frac{F_a}{F_r} \leqq e$		$\frac{F_a}{F_r} > e$	
X	Y	X	Y
1	Y_1	0.67	Y_2

static

$P_{or} = F_r + Y_o F_a$

For values of e, Y_2 and Y_o see the table below.

Abutment and fillet dimensions						Load center[2]	Constant	Axial load factors			Mass
mm						mm					kg
d_a	D_a		S_a	r_{as}	r_{las}						
max	max	min	min	max	max	a	e	Y_1	Y_2	Y_o	(approx.)
135	232	200	4.5	3	3	– 14.5	0.40	1.68	2.50	1.64	30
124.5	158	148.5	2.5	2	2	– 22.5	0.29	2.35	3.50	2.30	7.92
124	170	160	8	2	2	1	0.33	2.03	3.02	1.98	5.6
128.5	176	160	5	2.5	1.5	– 16	0.42	1.62	2.42	1.59	12.1
128.5	188	170.5	4	2	1	– 2	0.42	1.61	2.39	1.57	11.3
130.5	160	149	0.4	2	2	– 49	0.25	2.69	4.00	2.63	8.57
134	170	164	8	2	2	12	0.37	1.80	2.69	1.76	4.08
134	190	175	8	2	2	6.5	0.37	1.80	2.69	1.76	7.82
141	203	180.5	4.3	2	2	– 22	0.35	1.95	2.90	1.91	17.7
172	266	237	7.3	2.5	2.5	– 28.5	0.33	2.03	3.02	1.98	47.3
144	181.5	171	2	1.5	1.5	– 43.5	0.33	2.03	3.02	1.98	11.4
142.5	183	166	2.7	2	1.5	– 26.5	0.47	1.43	2.12	1.40	12.5
144	190	184	8	2	2	13.5	0.37	1.80	2.69	1.76	5.92
144	200	185	8	2	2	7.5	0.37	1.80	2.69	1.76	8.58
155	200	190	8	2	2	10	0.37	1.84	2.74	1.80	6.4
156	213	200	10	2	2.5	8	0.37	1.80	2.69	1.76	10.7
165	213	205	10	2	2.5	15.5	0.37	1.80	2.69	1.76	7.76
168	238	220	10	2	2.5	6.5	0.37	1.80	2.69	1.76	15.7
169	238	213	4.4	2	2	1	0.46	1.47	2.19	1.44	21.7
175	228	215	10	2	2.5	17.5	0.37	1.80	2.69	1.76	9.46
175.5	228	211	2.1	2	2	– 14.5	0.33	2.03	3.02	1.98	17.3
175	246	213	3.5	2.5	1.5	15	0.62	1.09	1.62	1.06	26.9
178	258	240	10	2	2.5	8	0.37	1.80	2.69	1.76	20
184.5	258	227	4.2	2	2	– 4.5	0.40	1.68	2.50	1.64	27.1
185	248	235	10	2	2.5	18	0.37	1.80	2.69	1.76	12.8
195	264	245	4.5	2	2	18	0.40	1.68	2.50	1.64	18.5
188	268	250	10	2	2.5	8.5	0.37	1.80	2.69	1.76	21.5
189	234	218	3.4	3.3	1.5	15.5	0.44	1.52	2.26	1.49	13.45
198	268	250	10	2	2.5	17	0.37	1.80	2.69	1.76	16.5

Double Row Tapered Roller Bearings (Inside Direction)

Metric system sizes

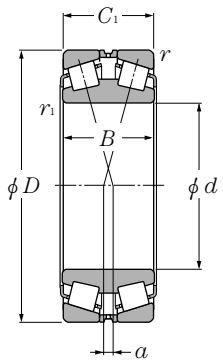

d 180～280mm

Boundary dimensions mm						Basic load ratings dynamic kN	static kN	dynamic kgf	static kgf	Bearing numbers
d	D	B	C_1	$r_{s\,min}$ ❶	$r_{ls\,min}$ ❶	C_r	C_{or}	C_r	C_{or}	
180	300	96	96	3	4	885	1,530	90,500	156,000	**323136E1**
	330	190	190	5	1.5	1,710	3,250	175,000	330,000	**CRD-3615**
190	290	75	75	2.5	3	615	1,110	63,000	113,000	**323038E1**
	320	104	104	3	4	985	1,710	100,000	174,000	**323138**
195	305	120	120	2.5	3	1,130	2,200	115,000	225,000	**CRD-3906**
200	310	82	82	2.5	3	720	1,320	73,000	135,000	**323040E1**
	340	112	112	3	4	1,090	1,910	111,000	195,000	**323140**
	340	140	140	3	3	1,490	2,780	152,000	283,000	**CRD-4019**
	340	150	150	3	1.5	1,290	2,490	131,000	254,000	**CRD-4015**
	420	235	235	5	2	3,000	5,350	305,000	545,000	☆**CRD-4020**
220	320	76.2	76.2	2.5	2.5	630	1,220	64,500	125,000	**CRD-4405**
	340	90	90	3	4	880	1,650	89,500	168,000	**323044E1**
	370	120	120	4	5	1,220	2,260	125,000	230,000	**323144**
240	360	92	92	3	4	910	1,770	92,500	181,000	**323048E1**
	395	124	124	4	4	1,400	2,630	143,000	268,000	**CRD-4804**
	400	128	128	4	5	1,400	2,600	142,000	265,000	**323148**
	400	160	160	4	4	1,770	3,550	181,000	360,000	**CRD-4805**
	400	160	160	4	4	1,770	3,550	181,000	36,000	**CRD-4811**
241.300	355.524	109.538	109.538	3.3	1.57	940	2,010	96,000	205,000	＊**CRD-4803**
259.5	481	250	250	5	2	3,250	6,650	330,000	680,000	**CRD-5215**
260	400	104	104	4	5	1,150	2,190	117,000	223,000	**323052**
	400	150	150	4	4	1,470	3,200	150,000	325,000	**CRD-5212**
	440	144	144	4	5	1,960	3,750	200,000	380,000	**323152**
260.350	419.100	180.000	158.750	3.3	1.57	1,580	3,250	161,000	330,000	＊**CRD-5217**
270	395	94	94	3	4	1,090	2,290	111,000	233,000	**CRD-5403**
280	420	106	106	4	5	1,200	2,340	123,000	238,000	**323056**
	460	146	146	5	6	1,940	3,650	198,000	375,000	**323156**

❶ Minimum allowable dimension for chamfer dimension r or r_1. ❷ "—" means the load center is out side the inner ring.
Remarks: 1. The marked "＊" bearings are inch system sizes. 2. Bearing numbers marked "☆" designate bearing with hollow rollers and pin type cages.

Double Row Tapered Roller Bearings (Inside Direction)

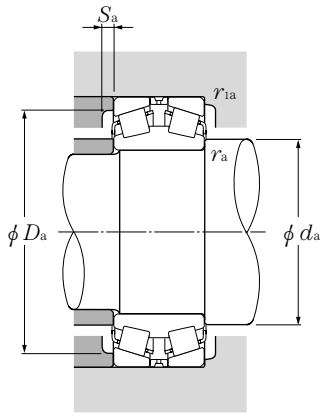

Equivalent bearing load

dynamic

$P_r = XF_r + YF_a$

$\frac{F_a}{F_r} \leqq e$		$\frac{F_a}{F_r} > e$	
X	Y	X	Y
1	Y_1	0.67	Y_2

static

$P_{or} = F_r + Y_o F_a$

For values of e, Y_2 and Y_o see the table below.

Abutment and fillet dimensions						Load[2] center	Constant	Axial load factors			Mass
mm						mm					kg
d_a	D_a		S_a	r_{as}	r_{las}						
max	max	min	min	max	max	a	e	Y_1	Y_2	Y_o	(approx.)
200	286	265	12	2.5	3	8	0.37	1.80	2.69	1.76	27.2
197.5	238	264	3.5	4	1.5	– 5.5	0.58	1.17	1.75	1.15	71.6
208	278	260	12	2	2.5	17.5	0.37	1.80	2.69	1.76	17.9
212	306	285	12	2.5	3	8.5	0.37	1.80	2.69	1.76	34
215	293	267	5.4	2	2.5	– 1	0.37	1.80	2.69	1.76	32.5
218	298	280	12	2	2.5	19	0.37	1.80	2.69	1.76	21.7
222	326	300	12	2.5	3	8.5	0.37	1.80	2.69	1.76	41.7
226.5	326	290	7.8	2.5	2.5	– 1.5	0.40	1.68	2.50	1.64	52.1
224	326	277.5	3.1	2.5	1.5	– 2.5	0.42	1.60	2.39	1.57	55.9
248.5	398	341	6.3	4	2	– 48.5	0.37	1.80	2.69	1.76	158
244	308	288	5.5	2	2	28.5	0.39	1.74	2.59	1.70	20.3
242	326	310	12	2.5	3	21.5	0.37	1.80	2.69	1.76	29.8
248	352	325	14	3	4	14	0.40	1.68	2.50	1.64	52.2
262	346	330	14	2.5	3	23.5	0.37	1.80	2.69	1.76	32.6
276	377	345	6.6	3	3	20.5	0.40	1.68	2.50	1.64	60.2
268	382	355	14	3	4	17	0.40	1.68	2.50	1.64	64.6
275	382	343	7.5	3	3	– 1	0.40	1.68	2.50	1.64	80.7
275	382	342	7.5	3	3	– 1	0.40	1.68	2.50	1.64	80.7
265	341	311.5	3.5	3.3	1.5	11	0.35	1.91	2.85	1.87	36.8
297	459	385	3.5	4	2	– 7	0.49	1.38	2.06	1.35	202
285	382	365	14	3	4	25	0.37	1.80	2.69	1.76	47.3
289	382	345	3.4	3	3	15	0.43	1.57	2.34	1.53	68.3
290	422	385	16	3	4	16.5	0.40	1.68	2.50	1.64	90
287	405	355	7.5	3.3	1.5	49.5	0.61	1.11	1.66	1.09	95.7
300	381	353	7.1	2.5	3	27	0.35	1.95	2.90	1.91	38.5
305	402	385	16	3	4	29.5	0.37	1.80	2.69	1.76	51.2
315	438	400	16	4	5	16	0.40	1.68	2.50	1.64	95.8

Double Row Tapered Roller Bearings (Inside Direction)

Metric system sizes

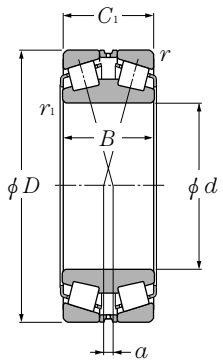

d 300～420mm

Boundary dimensions mm						Basic load ratings dynamic kN	static kN	dynamic kgf	static kgf	Bearing numbers
d	D	B	C_1	$r_{s\,min}$ ❶	$r_{ls\,min}$ ❶	C_r	C_{or}	C_r	C_{or}	
300	460	118	118	4	5	1,610	3,150	165,000	320,000	**323060**
	500	160	160	5	6	2,100	4,050	214,000	415,000	**323160**
304.648	438.048	128.575	138.112	4.83	3.3	1,480	3,450	151,000	350,000	**＊CRD-6132**
320	480	121	121	4	5	1,580	3,100	162,000	315,000	**323064**
	510.8	220	220	4	4	3,100	6,850	320,000	700,000	**CRD-6409**
	540	176	176	5	6	2,500	4,900	255,000	500,000	**323164**
	580	240	240	5	3	3,700	7,800	380,000	795,000	**☆CRD-6415**
	620	280	280	5	5	5,250	10,300	535,000	1,050,000	**☆CRD-6420**
340	470	110	110	3	3	1,320	3,050	134,000	310,000	**CRD-6804**
	520	133	133	5	6	1,890	3,750	193,000	380,000	**323068**
	580	190	190	5	6	3,350	6,500	345,000	660,000	**323168**
350	480	110	110	4	4	1,400	3,150	143,000	320,000	**CRD-7015**
	590	192	192	5	5	3,200	6,100	330,000	620,000	**CRD-7011**
360	540	134	134	5	6	2,050	4,200	209,000	430,000	**323072**
	600	192	192	5	6	3,200	6,500	325,000	660,000	**323172**
	680	320	330	6	6	6,500	13,900	665,000	1,410,000	**☆CRD-7207**
379	681.5	307	307	6	6	6,450	14,300	660,000	1,460,000	**☆CRD-7615**
	681.5	307	307	6	6	6,450	14,300	660,000	1,460,000	**☆CRD-7621**
380	560	135	135	5	6	2,080	4,350	213,000	445,000	**323076**
	620	194	194	5	6	3,350	6,700	340,000	685,000	**323176**
385	530	180	180	4	2	2,370	5,750	241,000	590,000	**CRD-7701**
400	590	142	142	5	5	2,400	5,050	245,000	515,000	**☆CRD-8008**
	590	142	142	5	5	2,080	4,150	212,000	425,000	**☆CRD-8012**
	600	148	148	5	6	2,530	5,450	258,000	555,000	**323080**
	650	200	200	6	6	3,750	7,850	385,000	800,000	**323180**
	650	250	250	6	6	4,900	10,500	500,000	1,070,000	**☆CRD-8017**
	730	340	340	7.5	7.5	7,400	15,900	755,000	1,620,000	**☆CRD-8029**
	780	380	380	7.5	7.5	8,800	17,700	900,000	1,800,000	**☆CRD-8040**
420	520	90	90	4	1.5	1,020	2,700	105,000	275,000	**CRD-8402**

❶ Minimum allowable dimension for chamfer dimension r or r_1. ❷ "—" means the load center is out side the inner ring.
Remarks: 1. The marked "＊" bearings are inch system sizes. 2. Bearing numbers marked "☆" designate bearing with hollow rollers and pin type cages.

Double Row Tapered Roller Bearings (Inside Direction)

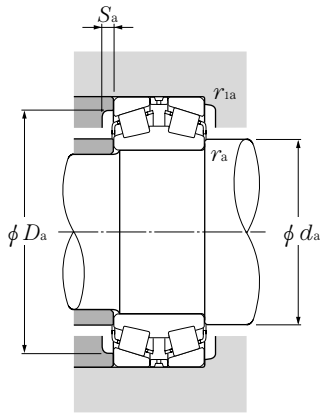

Equivalent bearing load

dynamic

$P_r = XF_r + YF_a$

$\frac{F_a}{F_r} \leqq e$		$\frac{F_a}{F_r} > e$	
X	Y	X	Y
1	Y_1	0.67	Y_2

static

$P_{or} = F_r + Y_o F_a$

For values of e, Y_2 and Y_o see the table below.

Abutment and fillet dimensions						Load[2] center	Constant	Axial load factors			Mass
mm						mm					kg
d_a	D_a		S_a	r_{as}	r_{las}						
max	max	min	min	max	max	a	e	Y_1	Y_2	Y_o	(approx.)
330	442	425	16	3	4	31	0.37	1.80	2.69	1.76	70.7
335	478	440	16	4	5	18	0.40	1.68	2.50	1.64	126
327	416	379.5	5.2	4.8	3.3	73	0.60	1.12	1.67	1.10	62.8
350	462	440	16	3	4	34	0.37	1.80	2.69	1.76	76.3
358	493	442.5	2.5	3	3	– 23	0.35	1.95	2.90	1.91	173
355	518	480	18	4	5	18.5	0.40	1.68	2.50	1.64	164
379	558	480	5.5	2.5	4	3	0.43	1.57	2.34	1.53	288
360	598	544	19.5	4	4	– 16.5	0.43	1.57	2.34	1.53	390
369	456	424	6.5	2.5	2.5	49.5	0.40	1.68	2.50	1.64	57.8
370	498	480	18	4	5	36	0.37	1.80	2.69	1.76	101
380	558	515	18	4	5	35.5	0.40	1.68	2.50	1.64	207
376.5	462	436	5.4	3	3	57.5	0.42	1.62	2.42	1.59	58.7
407	568	515	3.5	4	4	6	0.33	2.03	3.02	1.98	218
395	518	495	18	4	5	41	0.37	1.80	2.69	1.76	107
400	578	535	18	4	5	25.5	0.40	1.68	2.50	1.64	218
431	652	552	16.5	5	5	– 12	0.47	1.43	2.12	1.40	570
456	653.5	575	19.5	5	5	– 18.5	0.40	1.68	2.50	1.64	525
456	653.5	575	15.5	5	5	– 18.5	0.40	1.68	2.50	1.64	525
418	538	504	18	4	5	44.5	0.37	1.80	2.69	1.76	110
428	598	537.5	20	4	5	29	0.40	1.68	2.50	1.64	231
407.5	512	476	7.5	2	3	26	0.43	1.57	2.34	1.53	116
440.5	568	533	8.5	4	4	28.5	0.33	2.03	3.02	1.98	134
440.5	568	533	8.5	4	4	36.5	0.33	2.03	3.02	1.98	134
440	578	550	18	4	5	45	0.37	1.80	2.69	1.76	146
445	622	580	20	5	5	32.5	0.40	1.68	2.50	1.64	259
457.5	622	565	11.5	5	5	– 1	0.39	1.74	2.59	1.70	325
470	694	604	20.5	6	6	– 32	0.40	1.68	2.50	1.64	672
477.5	744	639	16.6	6	6	– 47	0.40	1.68	2.50	1.64	895
441	502	486	6.5	1.5	3	99.5	0.47	1.43	2.12	1.40	41.9

Double Row Tapered Roller Bearings (Inside Direction)

Metric system sizes

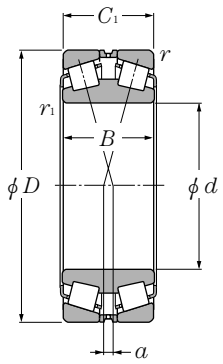

d 420～630mm

Boundary dimensions mm						Basic load ratings dynamic kN	static kN	dynamic kgf	static kgf	Bearing numbers
d	D	B	C_1	$r_{s\,min}$ ❶	$r_{ls\,min}$ ❶	C_r	C_{or}	C_r	C_{or}	
420	620	150	150	5	6	2,650	5,900	270,000	600,000	**323084**
	700	224	224	6	6	4,800	9,700	490,000	990,000	**323184**
	735	406	406	7.5	7.5	8,600	20,400	880,000	2,080,000	**☆CRD-8405**
440	650	157	157	6	6	2,600	5,450	266,000	560,000	**323088**
	720	226	226	6	6	5,000	10,300	510,000	1,050,000	**323188**
	730	290	290	6	6	6,400	13,900	650,000	1,420,000	**☆CRD-8822**
450	720	300	300	7.5	4	5,550	12,600	565,000	1,290,000	**☆CRD-9011**
458	830.5	377	377	7.5	7.5	9,250	20,100	940,000	2,050,000	**☆CRD-9203**
460	680	163	163	6	6	3,050	6,600	310,000	670,000	**323092**
	760	240	240	7.5	7.5	4,900	10,300	500,000	1,050,000	**323192**
	860	420	420	6	6	10,500	22,700	1,070,000	2,320,000	**☆CRD-9204**
480	700	165	165	6	6	3,050	6,700	310,000	685,000	**323096**
	790	248	248	7.5	7.5	5,300	11,100	540,000	1,130,000	**323196**
481.228	615.950	158.750	158.750	6.4	3.3	2,240	6,450	228,000	660,000	**☆＊CRD-9605**
482.600	615.950	158.750	158.750	6.4	3.3	2,240	6,450	228,000	660,000	**☆＊CRD-9709**
	615.950	163.750	158.750	6.4	3.3	2,430	7,100	248,000	725,000	**☆＊CRD-9708**
500	670	150	150	5	2.5	2,400	6,100	245,000	625,000	**CRD-10005**
	720	167	167	6	6	3,100	6,900	315,000	700,000	**3230/500**
	820	256	256	9.5	9.5	5,250	11,900	535,000	1,210,000	**CRD-10008**
	830	264	264	7.5	7.5	6,400	14,000	650,000	1,420,000	**☆3231/500G2**
560	820	195	195	6	6	4,550	10,300	465,000	1,050,000	**☆CRD-11207**
585.788	771.525	230.188	230.188	6.4	3.3	4,300	12,900	440,000	1,310,000	**☆＊CRD-11701**
600	760	115	115	4	4	1,740	4,400	178,000	450,000	**CRD-12005**
	870	380	400	7.5	4	8,500	24,100	865,000	2,460,000	**☆CRD-12006**
630	920	212	212	7.5	7.5	5,350	12,800	545,000	1,310,000	**☆3230/630G2**

❶ Minimum allowable dimension for chamfer dimension r or r_1. ❷ "—" means the load center is out side the inner ring.
Remarks: 1. The marked "＊" bearings are inch system sizes. 2. Bearing numbers marked "☆" designate bearing with hollow rollers and pin type cages.

Double Row Tapered Roller Bearings (Inside Direction)

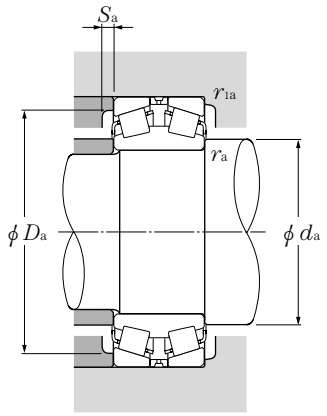

Equivalent bearing load

dynamic

$P_r = XF_r + YF_a$

$\frac{F_a}{F_r} \leqq e$		$\frac{F_a}{F_r} > e$	
X	Y	X	Y
1	Y_1	0.67	Y_2

static

$P_{or} = F_r + Y_o F_a$

For values of e, Y_2 and Y_o see the table below.

Abutment and fillet dimensions						Load[2] center	Constant	Axial load factors			Mass
mm						mm					kg
d_a	D_a		S_a	r_{as}	r_{las}						
max	max	min	min	max	max	a	e	Y_1	Y_2	Y_o	(approx.)
460	598	570	20	4	5	48.5	0.37	1.80	2.69	1.76	154
465	672	625	25	5	5	60	0.40	1.68	2.50	1.64	346
489.5	699	609	6.2	6	6	– 67	0.37	1.80	2.69	1.76	780
480	622	600	20	5	5	53.5	0.37	1.80	2.69	1.76	177
485	692	645	25	5	5	44	0.40	1.68	2.50	1.64	361
503.5	702	632	10	5	5	– 24.5	0.33	2.03	3.02	1.98	513
500.5	684	619.5	15.5	3	6	– 8	0.43	1.57	2.34	1.53	483
537	794.5	690.5	19.5	6	6	– 29	0.40	1.68	2.50	1.64	890
500	652	620	25	5	5	56.5	0.37	1.80	2.69	1.76	201
525	724	660	25	6	6	34.5	0.40	1.68	2.50	1.64	431
547	832	709.5	19.5	5	5	– 43	0.40	1.68	2.50	1.64	1,120
520	672	640	25	5	5	63	0.37	1.80	2.69	1.76	211
547.5	754	688.5	30	6	6	36	0.40	1.68	2.50	1.64	478
500	577	557	6.5	3.3	6.4	133.5	0.61	1.11	1.66	1.09	108
500	577	557	6.5	3.3	6.4	133.5	0.61	1.11	1.66	1.09	108
504	585	567.5	6.5	3.3	6.4	35.5	0.33	2.03	3.02	1.98	121
536	648	609	7.5	2	4	75.5	0.40	1.68	2.50	1.64	148
540	692	655	25	5	5	61.5	0.37	1.80	2.69	1.76	221
583.5	776	709	7.5	8	8	44	0.40	1.68	2.50	1.64	535
550	794	740	30	6	6	37.5	0.40	1.68	2.50	1.64	570
620	792	738	11	5	5	54.5	0.35	1.92	2.86	1.88	347
622.5	743.5	698	10.5	3.3	6.4	31.5	0.35	1.95	2.90	1.91	285
639	742	708	5	3	3	110.5	0.37	1.80	2.69	1.76	120
641	834	747	7.5	3	6	5.5	0.47	1.43	2.12	1.40	758
399	884	825.5	8.5	6	6	93.5	0.40	1.68	2.50	1.64	479

●Double Row Tapered Roller Bearings (Inside Direction)

Metric system sizes

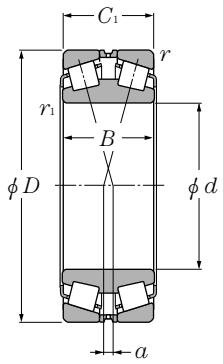

d 660.4～1,400mm

Boundary dimensions mm						Basic load ratings dynamic kN	Basic load ratings static kN	Basic load ratings dynamic kgf	Basic load ratings static kgf	Bearing numbers
d	D	B	C_1	$r_{s\,min}$ ❶	$r_{ls\,min}$ ❶	C_r	C_{or}	C_r	C_{or}	
660.400	762.000	98.425	101.600	3	2.5	1,250	4,250	128,000	435,000	＊**CRD-13209**
700	890	150	160	5	5	2,850	8,600	291,000	880,000	**CRD-14003**
710	1,150	345	345	12	12	10,900	25,300	1,120,000	2,580,000	☆**3231/710BG2**
850	1,250	370	370	7.5	7.5	11,800	31,500	1,210,000	3,250,000	☆**CRD-17003**
1,400	1,600	180	180	5	2.5	4,400	16,300	445,000	1,670,000	**CRD-28003**

❶ Minimum allowable dimension for chamfer dimension r or r_1. ❷ "—" means the load center is out side the inner ring.
Remarks: 1. The marked "＊" bearings are inch system sizes. 2. Bearing numbers marked "☆" designate bearing with hollow rollers and pin type cages.

Double Row Tapered Roller Bearings (Inside Direction)

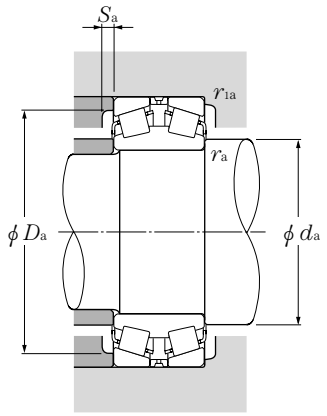

Equivalent bearing load

dynamic

$P_r = XF_r + YF_a$

$\frac{F_a}{F_r} \leqq e$		$\frac{F_a}{F_r} > e$	
X	Y	X	Y
1	Y_1	0.67	Y_2

static

$P_{or} = F_r + Y_o F_a$

For values of e, Y_2 and Y_o see the table below.

Abutment and fillet dimensions						Load center[2]	Constant	Axial load factors			Mass
mm						mm					kg
d_a	D_a		S_a	r_{as}	r_{las}						
max	max	min	min	max	max	a	e	Y_1	Y_2	Y_o	(approx.)
684	748	724	4.5	2	2.5	198.5	0.53	1.27	1.89	1.24	71.1
746	868	817	6.5	4	4	– 5.5	0.45	1.50	2.24	1.47	224
828	1,098	1,012	1.5	10	10	23	0.32	2.12	3.15	2.07	1,464
942	1,214	1,104	13.5	6	6	81.5	0.40	1.68	2.50	1.64	1,562
1,437.5	1,578	1,524	11.5	2	4	445.5	0.55	1.24	1.84	1.21	534

Inch system sizes

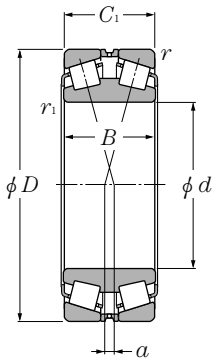

d 152.400～276.225mm

Boundary dimensions mm				Basic load ratings dynamic kN	static	dynamic kgf	static
d	D	B	C_1	C_r	C_{or}	C_r	C_{or}
152.400	307.975	171.450	161.924	1,510	2,620	154,000	267,000
177.800	288.925	123.825	123.825	940	1,900	96,000	194,000
	288.925	123.825	123.825	1,160	2,140	119,000	218,000
187.325	319.964	161.925	168.276	1,590	2,790	162,000	285,000
190.500	365.049	152.400	158.750	1,670	3,200	171,000	330,000
203.200	317.500	123.825	123.825	1,060	2,310	108,000	236,000
	365.049	152.400	158.750	1,670	3,200	171,000	330,000
206.375	336.550	184.150	180.976	1,900	4,050	194,000	415,000
215.900	285.750	85.725	85.725	650	1,640	66,500	167,000
219.075	358.775	200.025	196.850	2,130	4,550	217,000	465,000
220.662	314.325	115.888	115.886	1,070	2,450	109,000	250,000
228.600	400.050	139.700	139.700	1,500	2,870	153,000	293,000
241.478	349.148	107.950	107.950	940	2,010	96,000	205,000
244.475	327.025	92.075	92.075	835	2,050	85,000	209,000
	381.000	146.050	146.050	1,300	2,880	132,000	294,000
247.650	406.400	219.075	215.900	2,830	6,000	289,000	615,000
254.000	358.775	130.175	130.175	1,390	3,300	142,000	335,000
	368.300	92.862	92.710	790	1,630	80,500	166,000
260.350	400.050	114.300	119.060	1,220	2,460	124,000	251,000
266.700	355.600	109.538	107.950	1,070	2,670	110,000	272,000
269.875	381.000	136.525	136.525	1,520	3,600	155,000	365,000
276.225	393.700	130.175	130.175	1,340	2,800	137,000	286,000

Remarks: 1. The above chamfer of inner and outer ring are bigger than r_{as} max or r_{las} max.

Double Row Tapered Roller Bearings (Inside Direction)

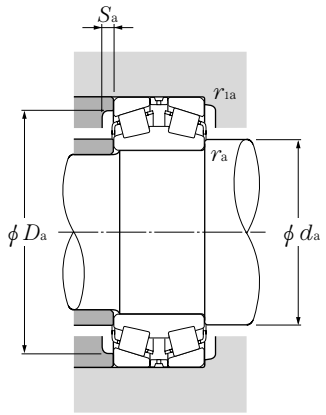

Equivalent bearing load

dynamic

$P_r = XF_r + YF_a$

$\frac{F_a}{F_r} \leqq e$		$\frac{F_a}{F_r} > e$	
X	Y	X	Y
1	Y_1	0.67	Y_2

static

$P_{or} = F_r + Y_o F_a$

For values of e, Y_2 and Y_o see the table below.

Bearing numbers	Abutment and fillet dimensions mm				Load❶ center mm	Constant	Axial load factors			Mass kg
	d_a min	D_a min	r_{as} max	r_{las} max	a	e	Y_1	Y_2	Y_o	(approx.)
T-450900D/451212+A	187.5	269	9.7	6.8	–40.5	0.33	2.07	3.08	2.02	60.5
T-94706D/94113+A	195	259	1.5	3.3	1.5	0.47	1.44	2.15	1.41	31.6
T-HM237546D/HM237510+A	194	266	1.5	3.3	–20	0.32	2.12	3.15	2.07	31.6
T-H239649D/H239610+A	209	293	3.3	4.8	–35	0.32	2.12	3.15	2.07	53.7
T-EE420750D/421437+A	221	329	3.3	3.3	–5.5	0.40	1.68	2.50	1.64	72.8
T-93800D/93125+A	222	286	1.5	3.3	19	0.52	1.29	1.92	1.26	36.3
T-EE420800D/421437+A	230	329	3.3	3.3	–5.5	0.40	1.68	2.50	1.64	69.0
T-H242649D/H242610+A	227	306	1.5	3.3	–35	0.33	2.03	3.02	1.98	64.1
T-LM742749D/LM742710+A	229	266	2.3	3.3	35	0.48	1.40	2.09	1.37	14.8
H244849D/H244810A+A	242	323	1.5	6.4	–42	0.33	2.03	3.02	1.98	79.5
T-M244249D/M244210+A	235	293	1.5	3.3	–97	0.33	2.03	3.02	1.98	28.6
EE529091D/529157+A	256	367	3.3	3.3	–8	0.31	2.18	3.24	2.13	74.2
EE127097D/127135+A	258	325	1.5	3.3	12.5	0.35	1.91	2.85	1.87	33.8
LM247748D/LM247710A+A	257	310	1.5	3.3	12.5	0.32	2.09	3.11	2.04	21.4
EE126096D/126150+A	269	343	3.3	4.8	28.5	0.52	1.31	1.95	1.28	61.4
HH249949D/HH249910+A	278	366	3.3	6.4	–42	0.33	2.03	3.02	1.98	112
T-M249748D/M249710+A	273	335	3.3	3.3	–1	0.33	2.03	3.02	1.98	41.2
EE170975D/171450+A	269	340	1.5	3.3	20	0.36	1.85	2.76	1.81	32.5
EE221025D/221575+A	290	366	6.4	6.4	24.5	0.39	1.71	2.54	1.67	52.0
T-LM451349D/LM451310+A	281	335	1.5	3.3	16	0.36	1.87	2.79	1.83	29.9
T-M252349D/M252310+A	290	356	3.3	3.3	0.5	0.33	2.03	3.02	1.98	48.6
T-EE275109D/275155+A	294	366	1.5	6.4	22.5	0.40	1.68	2.50	1.64	50.5

❶ "–" means the load center is out side the inner ring.

Double Row Tapered Roller Bearings (Inside Direction)

Inch system sizes

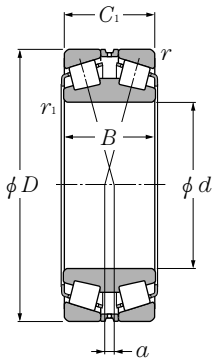

d 279.400～384.175mm

Boundary dimensions mm				Basic load ratings dynamic kN	static kN	dynamic kgf	static kgf
d	D	B	C_1	C_r	C_{or}	C_r	C_{or}
279.400	393.700	127.000	127.000	1,130	2,670	115,000	272,000
	457.200	244.475	244.475	3,550	7,900	365,000	805,000
285.750	380.898	117.475	117.475	1,140	3,100	116,000	315,000
288.925	406.400	144.462	144.463	1,740	4,150	177,000	425,000
300.038	422.275	150.812	150.813	1,950	4,800	198,000	490,000
304.648	438.048	131.762	131.762	1,440	3,250	147,000	330,000
304.800	419.100	130.175	130.175	1,400	3,400	142,000	350,000
	444.500	107.950	111.126	1,080	2,300	110,000	234,000
304.902	412.648	128.588	128.588	1,500	3,700	153,000	380,000
305.000	438.048	134.145	138.112	1,530	3,450	156,000	350,000
317.500	422.275	128.588	128.587	1,320	3,500	135,000	360,000
	447.675	158.750	158.750	1,990	4,800	203,000	485,000
333.375	469.900	166.688	166.688	2,320	5,500	237,000	565,000
343.052	457.098	122.238	122.238	1,380	3,450	141,000	350,000
346.075	488.950	174.625	174.625	2,490	6,150	254,000	630,000
347.662	469.900	138.112	138.112	1,860	4,550	190,000	465,000
355.600	444.500	114.300	112.712	1,120	3,500	114,000	355,000
	457.200	120.650	120.650	1,440	3,900	147,000	400,000
	482.600	128.588	133.350	1,630	3,850	166,000	390,000
	488.950	153.988	153.988	2,030	5,000	207,000	510,000
	501.650	111.125	127.000	1,550	3,650	158,000	375,000
368.300	523.875	185.738	185.738	2,610	6,550	266,000	665,000
384.175	546.100	193.675	193.675	3,150	8,050	320,000	820,000

Remarks: 1. The above chamfer of inner and outer ring are bigger than r_{as} max or r_{las} max.
2. Bearing numbers marked "☆" designate bearing with hollow rollers and pin type cages.

Double Row Tapered Roller Bearings (Inside Direction)

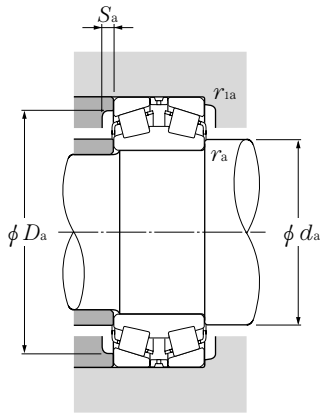

Equivalent bearing load

dynamic

$P_r = XF_r + YF_a$

$\frac{F_a}{F_r} \leqq e$		$\frac{F_a}{F_r} > e$	
X	Y	X	Y
1	Y_1	0.67	Y_2

static

$P_{or} = F_r + Y_o F_a$

For values of e, Y_2 and Y_o see the table below.

Bearing numbers	Abutment and fillet dimensions mm				Load center❶ mm	Constant	Axial load factors			Mass kg
	d_a min	D_a min	r_{as} max	r_{las} max	a	e	Y_1	Y_2	Y_o	(approx.)
EE135111D/135155+A	297	368	1.5	6.4	24	0.40	1.68	2.50	1.64	48.1
HH255149D/HH255110+A	309	412	1.5	6.4	–49	0.33	2.03	3.02	1.98	158
T-LM654648D/LM654610+A	302	356	1.5	3.3	36	0.43	1.56	2.33	1.53	36.7
M255449D/M255410A+A	310	379	3.3	3.3	3	0.34	2.00	2.98	1.96	58.1
☆T-HM256849D/HM256810G2+A	322	394	3.3	3.3	66	0.34	2.00	2.99	1.96	65.6
EE329119D/329172+A	327	410	3.3	3.3	11.5	0.33	2.04	3.04	2.00	64.3
M257149D/M257110+A	322	392	1.5	6.4	12.5	0.33	2.03	3.02	1.98	53.1
EE291200D/291750+A	337	416	7.9	1.5	34	0.38	1.78	2.65	1.74	55.7
M257248D/M257210+A	325	388	3.3	3.3	9.5	0.32	2.12	3.15	2.07	49
M757449D/M757410+A	328	407	3.3	4.8	44	0.47	1.43	2.12	1.40	65.3
LM258648D/LM258610+A	334	398	1.5	3.3	9	0.32	2.10	3.13	2.06	49.1
T-HM259049D/HM259010+A	340	418	3.3	3.3	3	0.33	2.02	3.00	1.97	77.9
HM261049D/HM261010A+A	357	439	3.3	3.3	3.5	0.33	2.02	3.00	1.97	90.1
LM761649D/LM761610+A	361	432	1.5	3.3	63	0.47	1.43	2.12	1.40	55
☆T-HM262749D/HM262710G2+A	371	456	3.3	3.3	2	0.33	2.02	3.00	1.97	103
M262449D/M262410+A	369	443	3.3	3.3	14.5	0.33	2.03	3.02	1.98	68
T-L163149D/L163110+A	370	422	1.5	3.3	22.5	0.31	2.20	3.27	2.15	40.1
LM263149D/LM263110+A	372	434	1.5	3.3	23	0.32	2.12	3.15	2.07	49.1
LM763449D/LM763410+A	375	453	1.5	3.3	62.5	0.47	1.43	2.14	1.40	67.4
M263349D/M263310+A	374	459	1.5	3.3	11.5	0.33	2.03	3.02	1.98	85.4
T-EE231401D/231975+A	382	472	3.3	3.3	62	0.44	1.53	2.28	1.50	68.5
☆HM265049D/HM265010G2+A	394	487	3.3	6.4	1.5	0.33	2.03	3.02	1.98	130
☆T-HM266449D/HM266410G2+A	411	507	3.3	6.4	1.5	0.33	2.03	3.02	1.98	153

❶ "—" means the load center is out side the inner ring.

Inch system sizes

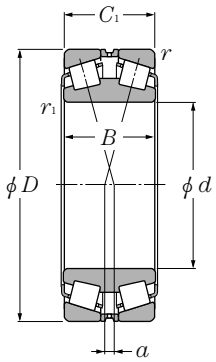

d 393.700～584.200mm

Boundary dimensions mm				Basic load ratings dynamic kN	static	dynamic kgf	static
d	D	B	C_1	C_r	C_{or}	C_r	C_{or}
393.700	546.100	138.112	138.112	1,870	5,100	191,000	520,000
406.400	546.100	138.112	138.112	1,870	5,100	191,000	520,000
	590.550	193.675	193.674	2,820	6,800	287,000	690,000
409.575	546.100	161.925	161.925	2,390	6,350	243,000	645,000
415.925	590.550	209.550	209.550	3,650	9,450	375,000	965,000
431.800	571.500	133.350	136.526	1,880	4,950	191,000	505,000
	571.500	161.925	161.925	2,160	5,900	221,000	600,000
447.675	635.000	223.838	223.838	4,150	11,100	425,000	1,130,000
457.200	596.900	133.350	136.525	2,070	5,200	211,000	530,000
	596.900	133.350	136.525	2,070	5,200	211,000	530,000
479.425	679.450	238.125	238.125	4,900	13,000	500,000	1,320,000
482.600	615.950	158.750	158.750	2,320	6,700	237,000	685,000
	647.700	201.612	201.612	3,700	10,100	380,000	1,030,000
489.026	634.873	153.988	153.988	2,500	6,950	255,000	710,000
501.650	711.200	250.825	250.825	5,050	13,700	515,000	1,390,000
514.350	673.100	203.200	203.200	3,450	10,200	355,000	1,040,000
519.112	736.600	258.762	258.762	5,300	14,400	540,000	1,470,000
536.575	761.873	269.875	269.875	5,900	15,200	600,000	1,550,000
	761.873	269.875	269.875	5,900	15,200	600,000	1,550,000
558.800	736.600	155.575	155.575	2,500	6,750	255,000	690,000
	736.600	196.850	196.850	3,550	10,300	365,000	1,050,000
571.500	812.800	285.750	285.750	6,950	18,300	710,000	1,870,000
584.200	762.000	188.912	193.675	3,850	11,200	390,000	1,140,000

Remarks: 1. The above chamfer of inner and outer ring are bigger than r_{as} max or r_{las} max.
2. Bearing numbers marked "☆" designate bearing with hollow rollers and pin type cages.

Double Row Tapered Roller Bearings (Inside Direction)

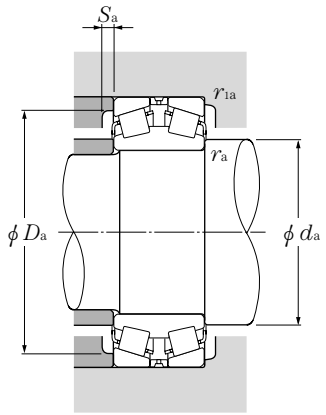

Equivalent bearing load

dynamic

$P_r = XF_r + YF_a$

$\frac{F_a}{F_r} \leqq e$		$\frac{F_a}{F_r} > e$	
X	Y	X	Y
1	Y_1	0.67	Y_2

static

$P_{or} = F_r + Y_o F_a$

For values of e, Y_2 and Y_o see the table below.

Bearing numbers	Abutment and fillet dimensions mm				Load center[1] mm	Constant	Axial load factors			Mass kg
	d_a min	D_a min	r_{as} max	r_{las} max	a	e	Y_1	Y_2	Y_o	(approx.)
LM767745D/LM767710+A	418	510	1.5	6.4	78	0.48	1.42	2.11	1.38	97.4
LM767749D/LM767710+A	427	510	1.5	6.4	78	0.48	1.42	2.11	1.38	90.5
EE833160XD/833232+A	435	549	3.3	6.4	5.5	0.33	2.07	3.09	2.03	175
☆M667947D/M667910G2+A	431	510	1.5	6.4	47	0.42	1.61	2.40	1.58	104
☆T-M268749D/M268710G2+A	444	549	3.3	6.4	0.5	0.33	2.03	3.02	1.98	181
T-LM869449D/LM869410+A	453	537	1.5	3.3	113	0.55	1.24	1.84	1.21	92.1
LM769349D/LM769310+A	453	534	1.5	6.4	62.5	0.44	1.52	2.26	1.49	112
☆M270749D/M270710AG2+A	478	591	3.3	6.4	0.5	0.33	2.03	3.02	1.98	224
☆L770847D/L770810AG2+A	478	567	1.5	3.3	97	0.47	1.43	2.12	1.40	96.7
L770849D/L770810+A	478	567	1.5	3.3	97	0.47	1.43	2.12	1.40	96.7
☆T-M272749D/M272710G2+A	510	633	3.3	6.4	1.5	0.33	2.03	3.02	1.98	293
☆LM272249D/LM272210G2+A	504	585	3.3	6.4	35.5	0.33	2.03	3.02	1.98	115
☆M272647D/M272610G2+A	510	609	3.3	6.4	18	0.33	2.03	3.02	1.98	185
LM772749D/LM772710A+A	516	600	3.3	3.3	95	0.47	1.43	2.12	1.40	124
☆M274149D/M274110G2+A	534	663	3.3	6.4	–1.5	0.33	2.03	3.02	1.98	314
LM274449D/LM274410+A	540	636	3.3	6.4	23	0.33	2.03	3.02	1.98	189
☆M275349D/M275310G2+A	552	684	3.3	6.4	–1.5	0.33	2.03	3.02	1.98	348
☆M276448D/M276410G2+A	564	711	3.3	6.4	1	0.33	2.03	3.02	1.98	389
☆M276449D/M276410G2+A	564	711	3.3	6.4	1	0.33	2.03	3.02	1.98	389
EE843220D/843290+A	585	699	3.3	6.4	64.5	0.34	1.98	2.94	1.93	177
☆LM377449D/LM377410G2+A	588	696	3.3	6.4	43	0.35	1.95	2.9.0	1.91	223
☆M278749D/M278710AG2+A	609	756	3.3	6.4	0	0.33	2.03	3.02	1.98	470
☆LM778549D/LM778510G2+A	615	717	3.3	6.4	108	0.47	1.43	2.14	1.40	223

[1] "–" means the load center is out side the inner ring.

Double Row Tapered Roller Bearings (Inside Direction)

Inch system sizes

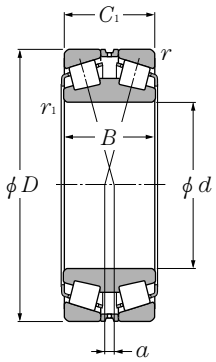

d 595.312～939.800mm

Boundary dimensions mm				Basic load ratings dynamic kN	static kN	dynamic kgf	static kgf
d	D	B	C_1	C_r	C_{or}	C_r	C_{or}
595.312	844.550	296.862	296.862	7,350	20,200	750,000	2,060,000
609.600	787.400	171.450	171.450	3,500	9,950	360,000	1,020,000
	863.600	317.500	317.500	7,900	21,100	805,000	2,150,000
635.000	901.700	317.500	317.500	8,300	22,100	845,000	2,250,000
657.225	933.450	328.612	328.612	8,950	24,000	910,000	2,450,000
660.400	812.800	176.212	176.212	3,600	11,600	370,000	1,180,000
679.450	901.700	265.112	265.112	6,500	19,000	665,000	1,940,000
685.800	876.300	168.275	171.450	3,550	10,900	360,000	1,110,000
708.025	930.275	273.050	273.050	6,750	20,400	690,000	2,080,000
711.200	914.400	149.225	149.225	3,100	8,950	315,000	910,000
749.300	990.600	293.000	293.000	7,400	22,700	750,000	2,310,000
762.000	1,066.800	352.425	365.125	10,300	29,300	1,050,000	2,990,000
	1,079.500	381.000	381.000	11,100	32,000	1,130,000	3,250,000
863.600	1,130.300	323.850	323.850	9,200	29,600	935,000	3,000,000
	1,219.200	425.450	438.150	14,000	41,500	1,430,000	4,200,000
938.212	1,270.000	400.050	400.050	13,100	40,000	1,340,000	4,100,000
939.800	1,333.500	349.250	463.550	16,900	48,500	1,720,000	4,950,000

Remarks: 1. The above chamfer of inner and outer ring are bigger than r_{as} max or r_{las} max.
2. Bearing numbers marked "☆" designate bearing with hollow rollers and pin type cages.

Double Row Tapered Roller Bearings (Inside Direction)

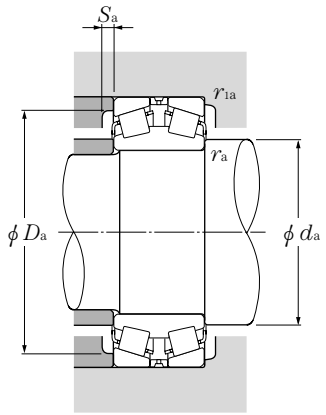

Equivalent bearing load

dynamic

$P_r = XF_r + YF_a$

$\frac{F_a}{F_r} \leqq e$		$\frac{F_a}{F_r} > e$	
X	Y	X	Y
1	Y_1	0.67	Y_2

static

$P_{or} = F_r + Y_o F_a$

For values of e, Y_2 and Y_o see the table below.

Bearing numbers	Abutment and fillet dimensions mm				Load❶ center mm	Constant	Axial load factors			Mass kg
	d_a min	D_a min	r_{as} max	r_{las} max	a	e	Y_1	Y_2	Y_o	(approx.)
☆M280049D/M280010G2+A	633	786	3.3	6.4	1	0.33	2.03	3.02	1.98	525
☆T-EE649241D/649310G2+A	636	747	3.3	6.4	79	0.37	1.82	2.71	1.78	210
☆M280349D/M280310G2+A	648	807	3.3	6.4	–4.5	0.33	2.03	3.02	1.98	585
☆M281049D/M281010G2+A	675	843	3.3	6.4	6	0.33	2.03	3.02	1.98	641
☆M281649D/M281610G2+A	699	870	3.3	6.4	6	0.33	2.03	3.02	1.98	711
☆L281149D/L281110G2+A	684	777	3.3	6.4	89	0.37	1.80	2.69	1.76	195
☆LM281849D/LM281810G2+A	714	852	3.3	6.4	31.5	0.33	2.03	3.02	1.98	459
☆EE655271D/655345G2+A	717	831	3.3	6.4	129	0.42	1.61	2.4.0	1.58	247
☆LM282549D/LM282510G2+A	741	879	3.3	6.4	33	0.33	2.03	3.02	1.98	490
☆EE755281D/755360G2+A	744	873	3.3	6.4	127	0.38	1.77	2.64	1.73	243
☆LM283649D/LM283610G2+A	786	936	3.3	6.4	34.5	0.33	2.03	3.02	1.98	606
☆M284148D/M284111G2+A	819	996	special chamfer	12.7	14	0.33	2.03	3.02	1.98	968
☆M284249D/M284210G2+A	810	1,005	4.8	12.7	0	0.33	2.03	3.02	1.98	1,097
☆LM286249D/LM286210G2+A	906	1,065	4.8	12.7	49.5	0.33	2.03	3.02	1.98	848
☆EE547341D/547480G2+A	918	1,135	4.8	12.7	1.5	0.33	2.03	3.02	1.98	1,552
☆LM287649D/LM287610G2+A	990	1,190	4.8	12.7	30.5	0.33	2.03	3.02	1.98	1,444
☆LM287849D/LM287810G2+A	999	1,240	4.8	12.7	3.5	0.33	2.03	3.02	1.98	1,540

❶ "—" means the load center is out side the inner ring.

Double Row Steep Slope Tapered Roller Bearings (Outside Direction)

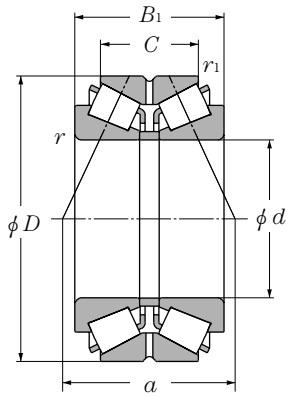

d 100～533.400mm

Boundary dimensions mm						Basic load ratings dynamic kN	static kN	dynamic kgf	static kgf	Bearing numbers
d	D	B_1	C	$r_{s\,min}$ ❶	$r_{ls\,min}$ ❶	C_r	C_{or}	C_r	C_{or}	
100	215	115	74	3	1	510	680	52,000	69,500	**CRI-2054**
105	240	110	75	3	1	585	790	60,000	80,500	**CRI-2105**
110	240	118	81	3	1	585	790	60,000	80,500	**CRI-2262**
	240	119	74	3	1	585	790	60,000	80,500	**CRI-2252**
115	230	116	84	3	1.5	680	1,100	69,000	112,000	**CRI-2301**
125	230	116	84	3	2	735	1,240	75,000	127,000	**CRI-2554**
128	229	116	74	3	1	525	830	53,500	84,500	**CRI-2663**
130	280	137	93.5	4	1.5	835	1,170	85,500	120,000	**CRI-2618**
	299	137	87.5	4	1.5	895	1,420	91,500	145,000	**CRI-2624**
140	260	120	84	3	1.5	735	1,210	75,000	123,000	**CRI-2826**
155	330	180	120	5	1.5	1,350	2,210	137,000	226,000	**CRI-3101**
230	380	175	115	4	1.5	1,410	2,970	144,000	305,000	**CRI-4613**
260	530	275	163.9	6	2.5	2,880	5,200	293,000	530,000	**CRI-5215**
305	560	223	130	5	2.5	2,530	4,700	258,000	480,000	**☆CRI-6108**
317.500	558.800	254.000	162.000	5	2	3,000	5,900	310,000	600,000	**☆＊CRI-6412**
370	680	280	188	7.5	4	4,300	8,400	440,000	855,000	**☆CRI-7402**
533.400	736.600	225.425	177.800	6.4	1.5	3,300	9,250	340,000	940,000	**☆＊CRI-10702**

❶ Minimum allowable dimension for chamfer dimension r or r_1.

Remarks: 1. The marked "＊" bearings are inch system sizes. 2. Bearing numbers marked "☆" designate bearing with hollow rollers and pin type cages.

Double Row Steep Slope Tapered Roller Bearings (Outside Direction)

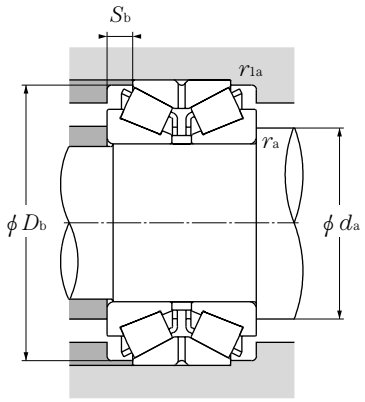

Equivalent bearing load

dynamic

$P_r = XF_r + YF_a$

$\frac{F_a}{F_r} \leqq e$		$\frac{F_a}{F_r} > e$	
X	Y	X	Y
1	Y_1	0.67	Y_2

static

$P_{or} = F_r + Y_o F_a$

For values of e, Y_2 and Y_o see the table below.

Abutment and fillet dimensions					Load center	Constant	Axial load factors			Mass
mm					mm					kg
d_a min	D_b min	S_b min	r_{as} max	r_{las} max	α	e	Y_1	Y_2	Y_o	(approx.)
114	202	20.5	2.5	1	54	0.81	0.83	1.23	0.81	18.2
119	227.5	17.5	2.5	1	146	0.81	0.83	1.23	0.81	23.6
124	228	18.5	2.5	1	153	0.81	0.83	1.23	0.81	22
124	223.5	22.5	2.5	1	152	0.81	0.83	1.23	0.81	25
129	221	16	2.5	1.5	143.5	0.74	0.92	1.36	0.90	21.2
139	221	16	2.5	2	143.5	0.74	0.92	1.36	0.90	19.9
142	220.5	21	2.5	1	192.5	1.10	0.61	0.91	0.60	17.8
148	268.5	21.5	3	1.5	176.5	0.81	0.83	1.23	0.81	34.5
148	270	24.5	3	1.5	184.5	0.83	0.81	1.21	0.79	45.8
154	245	18	2.5	1.5	155.5	0.74	0.92	1.36	0.90	26.6
177	313	30	4	1.5	219	0.81	0.83	1.24	0.82	66
248	363.5	30	3	1.5	241	0.80	0.85	1.26	0.83	73.9
288	494	55.5	5	2	364.5	0.94	0.71	1.06	0.70	248
327	530	46.5	4	2	414	1.09	0.62	0.92	0.61	227
339.5	531.5	46	4	2	351	0.81	0.84	1.25	0.82	248
406	633	46	6	3	370.5	0.70	0.97	1.44	0.94	420
561.5	718.5	24	5	1.5	399.5	0.70	0.97	1.44	0.94	268

Double Row Steep Slope Tapered Roller Bearings (Inside Direction)

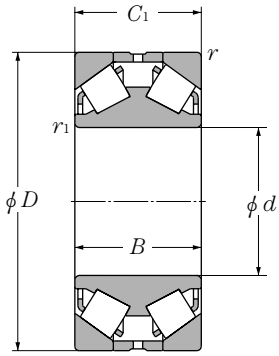

Drawing A

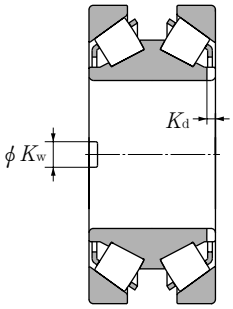

Drawing B

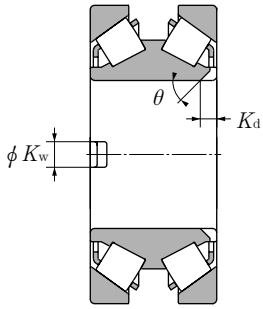

Drawing C

d 100～260mm

Boundary dimensions mm						Basic load ratings dynamic kN	Basic load ratings static kN	Basic load ratings dynamic kgf	Basic load ratings static kgf	Bearing numbers	Drawing No.
d	D	B	C_r	$r_{s\,min}$ ❶	$r_{ls\,min}$ ❶	C_r	C_{or}	C_r	C_{or}		
100	215	105	110	3	1	585	825	60,000	84,500	CRD-2005	A
	250	120	120	3	2.5	750	1,080	76,500	110,000	CRD-2011	A
110	240	118	118	3	1	750	1,080	76,500	110,000	CRD-2214	A
120	260	130	130	3	1	830	1,200	85,000	122,000	CRD-2410	A
125	305	180	180	3	3	1,410	2,250	143,000	230,000	CRD-2503	B
140	305	160	160	5	1.5	1,160	1,850	118,000	189,000	CRD-2819	A
150	320	144	144	4	4	1,050	1,490	107,000	152,000	CRD-3013	A
	380	235	235	5	2.5	2,320	4,000	236,000	410,000	CRD-3011	A
160	260	130	130	3	1.5	880	1,740	89,500	178,000	CRD-3253	A
170	300	100	100	3	2.5	845	1,450	86,000	148,000	CRD-3423	A
	360	144	160	4	2.5	1,270	2,000	129,000	204,000	CRD-3414	A
	360	144	160	4	1.5	1,440	2,300	147,000	234,000	CRD-3416	A
180	330	190	190	5	1.5	1,710	3,250	175,000	330,000	CRD-3615	A
	380	158	158	3	4	1,380	1,980	141,000	202,000	CRD-3623	A
	400	232	232	4	4	2,090	3,600	213,000	370,000	CRD-3622	A
190	320	104	104	3	3	810	1,460	83,000	149,000	CRD-3801	A
	320	104	104	3	4	850	1,540	86,500	157,000	CRD-3813	A
	350	135	135	3	3	1,130	1,950	116,000	199,000	CRD-3811	A
210	480	230	230	6	6	2,690	4,300	274,000	440,000	CRD-4209	A
228.600	431.800	177.800	177.800	5	5	1,630	3,100	166,000	315,000	＊CRD-4604	A
240	460	140	140	5	5	1,380	2,510	140,000	256,000	☆CRD-4808	B
254	585	260	285	4	4	3,700	6,450	375,000	660,000	☆CRD-5102	A
260	458	155	155	5	5	1,740	3,150	177,000	320,000	☆CRD-5214	B
	459	155	155	5	5	1,740	3,150	177,000	320,000	☆CRD-5216	A
	459	155	155	4	4	1,740	3,150	177,000	320,000	☆CRD-5224	B

❶ Minimum allowable dimension for chamfer dimension r or r_1.

Remarks: 1. The marked "＊" bearings are inch system sizes. 2. Bearing numbers marked "☆" designate bearing with hollow rollers and pin type cages.

Double Row Steep Slope Tapered Roller Bearings (Inside Direction)

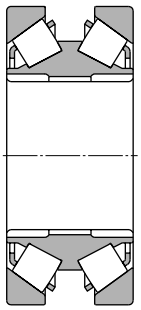

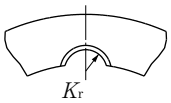

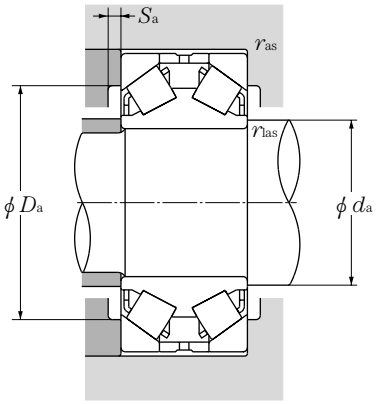

Drawing D

Equivalent bearing load

dynamic

$P_r = XF_r + YF_a$

$\frac{F_a}{F_r} \leqq e$		$\frac{F_a}{F_r} > e$	
X	Y	X	Y
1	Y_1	0.67	Y_2

static

$P_{or} = F_r + Y_o F_a$

For values of e, Y_2 and Y_o see the table below.

Groove dimensions					Abutment and fillet dimensions					Constant	Axial load factors			Mass
mm			numbers	mm	mm									kg
width	depth	angle	×	key groove	d_a	D_a	S_a	r_{as}	r_{las}					
K_w	K_d	θ °	side face	K_r	max	min	min	max	max	e	Y_1	Y_2	Y_o	(approx.)
—	—	—	—	—	117.5	201	3.7	2.5	3	0.81	0.83	1.23	0.81	19.7
—	—	—	—	—	130.5	236	6.6	2.5	3	0.81	0.83	1.23	0.81	31.2
—	—	—	—	—	129	226	5.8	2.5	3	0.81	0.83	1.23	0.81	26.6
—	—	—	—	—	147.5	246	3.1	2.5	3	0.81	0.83	1.23	0.81	34.2
30.2	11	90	1-2	—	160.5	291	1.5	2.5	3	0.73	0.93	1.38	0.91	68.9
—	—	—	—	—	168.5	283	7.5	4	5	0.73	0.92	1.37	0.90	58.1
—	—	—	—	—	180	302	8	3	4	0.81	0.83	1.23	0.81	56.9
—	—	—	—	—	186.5	358	6.5	4	5	0.81	0.83	1.23	0.81	142
—	—	—	—	—	177	246	3.5	2.5	3	0.62	1.09	1.62	1.06	27
—	—	—	—	—	195	286	5.4	2.5	3	0.70	0.97	1.44	0.94	30.2
—	—	—	—	—	204.5	342	1.5	3	4	1.10	0.62	0.92	0.60	79.7
—	—	—	—	—	197	342	1.5	3	4	1.10	0.61	0.91	0.60	79.7
—	—	—	—	—	200.5	308	3.5	4	5	0.58	1.17	1.75	1.15	71.9
—	—	—	—	—	208.5	366	3.4	2.5	3	0.81	0.83	1.23	0.81	87.6
—	—	—	—	—	211.5	382	6.8	3	4	0.81	0.83	1.23	0.81	146.5
—	—	—	—	—	216.5	306	5.5	2.5	3	0.73	0.92	1.37	0.90	34.1
—	—	—	—	—	214	306	4.6	2.5	3	0.80	0.85	1.26	0.83	34.1
—	—	—	—	—	216	336	5.5	2.5	3	0.81	0.83	1.23	0.81	57.7
—	—	—	—	—	253	367	5.9	5	5	0.81	0.83	1.23	0.81	212
—	—	—	—	—	278	410	1.5	4	5	1.01	0.67	0.99	0.65	118
50	15	90	2-2	—	296	438	1.5	4	5	0.87	0.78	1.16	0.76	107
—	—	—	—	—	301	567	4.5	3	4	1.17	0.58	0.86	0.56	392
32	15	90	2-2	—	304	436	1.5	4	5	0.87	0.78	1.16	0.76	109
—	—	—	—	—	304	437	1.5	4	5	0.87	0.78	1.16	0.76	110
32	15	90	2-2	—	304	441	1.5	3	4	0.87	0.78	1.16	0.76	110

Double Row Steep Slope Tapered Roller Bearings (Inside Direction)

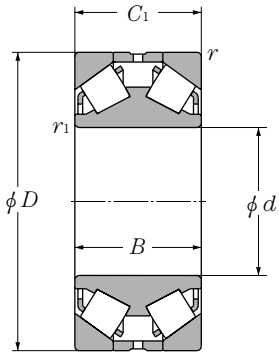

Drawing A

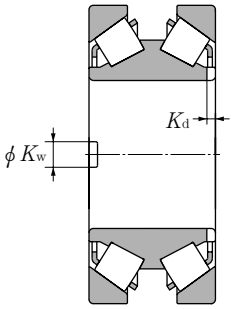

Drawing B

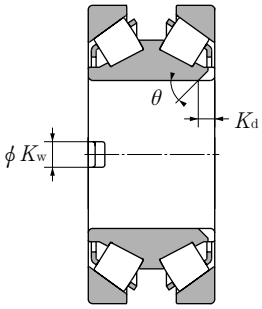

Drawing C

d 279.400～305.105mm

Boundary dimensions mm						Basic load ratings dynamic kN	static kN	dynamic kgf	static kgf	Bearing numbers	Drawing No.
d	D	B	C_r	$r_{s\,min}$ ❶	$r_{ls\,min}$ ❶	C_r	C_{or}	C_r	C_{or}		
279.400	533.400	241.300	266.700	6.4	2	3,150	6,100	320,000	620,000	☆＊**CRD-5613**	A
280	410	110	110	2.5	2.5	985	1,960	101,000	200,000	**CRD-5616**	A
285	380	92	92	2.5	1	730	1,720	74,500	176,000	**CRD-5704**	C
300	440	105	105	4	4	1,000	2,150	102,000	219,000	**CRD-6025**	C
	440	105	105	3	3	1,000	2,150	102,000	219,000	**CRD-6027**	C
	500	180	180	5	5	1,720	3,300	176,000	340,000	**CRD-6006**	B
	500	200	200	5	5	2,460	5,300	251,000	540,000	☆**CRD-6028**	C
	500	200	200	5	6	2,480	5,400	253,000	550,000	☆**CRD-6030**	A
	520	180	210	4	4	2,200	4,650	225,000	475,000	**CRD-6026**	A
304.800	499.948	158.750	203.200	6.4	3.3	1,670	3,300	171,000	340,000	＊**CRD-6109**	A
	499.948	200.000	200.000	6	6	1,670	3,300	171,000	340,000	＊**CRD-6123**	A
305.000	500.000	200.000	200.000	5	5	2,170	5,050	222,000	515,000	＊**CRD-6120**	C
	500.000	200.000	200.000	special chamfer	5	2,460	5,300	251,000	540,000	☆＊**CRD-6148**	C
	500.000	200.000	200.000	5	5	2,170	5,050	222,000	515,000	＊**CRD-6151**	C
	500.000	200.000	200.000	5	5	2,460	5,300	251,000	540,000	☆＊**CRD-6137**	C
	559.968	169.977	176.434	4	4	2,020	3,950	206,000	405,000	＊**CRD-6140**	A
	560.000	200.000	200.000	10	6.4	2,340	4,700	239,000	480,000	☆＊**CRD-6146**	B
	560.000	200.000	200.000	20	6.4	2,340	4,700	239,000	480,000	☆＊**CRD-6154**	B
	560.000	200.000	200.000	10	6.4	2,270	4,500	232,000	460,000	☆＊**CRD-6135**	C
305.003	559.867	169.977	176.352	4	6.4	2,010	3,950	205,000	400,000	☆＊**CRD-6113**	A
305.069	559.999	200.000	200.000	19.7	6.4	2,270	4,500	232,000	460,000	＊**CRD-6112A.D** ❷	
	559.999	200.000	200.000	9.5	6	2,270	4,500	232,000	460,000	＊**CRD-6152**	C
	560.000	200.000	200.000	19.7	6.4	2,530	4,700	258,000	480,000	☆＊**CRD-6136**	B
305.079	500.000	200.000	200.000	5	6	2,170	5,050	222,000	515,000	＊**CRD-6125**	C
	500.000	200.000	200.000	5	6	2,440	5,900	249,000	600,000	＊**CRD-6101**	D
	500.000	200.000	200.000	5	6	2,440	5,900	249,000	600,000	＊**CRD-6116**	D
305.105	559.867	169.977	200.000	3	4	2,160	4,300	220,000	440,000	＊**CRD-6104**	A
	559.867	169.977	200.508	4	4	2,230	4,500	227,000	455,000	☆＊**CRD-6117**	A
	559.968	200.000	200.000	19	7	2,530	4,700	258,000	480,000	☆＊**CRD-6110**	B
	599.968	170.434	170.434	4	2.5	2,040	4,000	208,000	410,000	☆＊**CRD-6115**	A

❶ Minimum allowable dimension for chamfer dimension r or r_1. ❷ This bearing's shape is half of drawing 3 and 4.

Remarks: 1. The marked "＊" bearings are inch system sizes. 2. Bearing numbers marked "☆" designate bearing with hollow rollers and pin type cages.

Double Row Steep Slope Tapered Roller Bearings (Inside Direction)

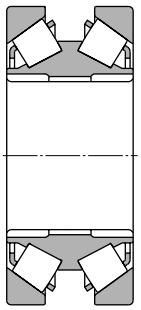

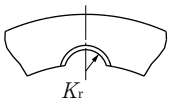

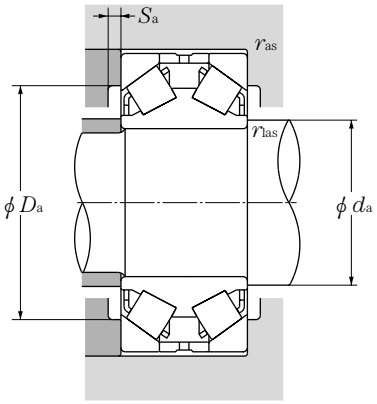

Drawing D

Equivalent bearing load

dynamic

$P_r = XF_r + YF_a$

$\frac{F_a}{F_r} \leqq e$		$\frac{F_a}{F_r} > e$	
X	Y	X	Y
1	Y_1	0.67	Y_2

static

$P_{or} = F_r + Y_o F_a$

For values of e, Y_2 and Y_o see the table below.

Groove dimensions					Abutment and fillet dimensions					Constant	Axial load factors			Mass
mm			numbers	mm	mm									kg
width	depth	angle	×	key groove	d_a	D_a	S_a	r_{as}	r_{las}					
K_w	K_d	θ °	side face	K_r	max	min	min	max	max	e	Y_1	Y_2	Y_o	(approx.)
—	—	—	—	—	306	505.5	1.5	5	5	1.09	0.62	0.92	0.61	272
—	—	—	—	—	300	398	5	2	2.5	1.05	0.64	0.96	0.63	49
32	13	45	1-2	—	299.5	368	6.5	2	2.5	0.81	0.83	1.23	0.81	29
32.13	22.225	45	1-2	—	325	422	4.5	3	4	0.81	0.83	1.23	0.81	54
32.1	22.2	45	1-2	—	325	381.5	4.5	2.5	3	0.81	0.83	1.23	0.81	54
40	15	90	2-2	—	345	478	1.5	4	5	1.19	0.57	0.85	0.56	143
50.8	34.925	45	2-2	—	342	478	1.5	4	5	0.76	0.88	1.31	0.86	158
—	—	—	—	—	341	478	1.5	4	5	0.76	0.88	1.31	0.86	158
—	—	—	—	—	332.5	502	1.5	3	4	1.17	0.58	0.86	0.56	187
—	—	—	—	—	344	472	1.5	5	5	1.19	0.57	0.84	0.55	158
—	—	—	—	—	343	472	2.5	5	5	1.19	0.57	0.84	0.55	155
51.5	35	45	2-2	—	347	478	1.5	4	5	0.70	0.97	1.44	0.94	135
50.9	35	45	2-2	—	342	478	1.5	4	5	0.76	0.88	1.31	0.86	155
40.5	35	45	2-2	—	347	478	1.5	4	5	0.70	0.97	1.44	0.94	155
50.8	34.925	45	1-2	—	342	478	1.5	4	5	0.76	0.88	1.31	0.86	155
—	—	—	—	—	372.5	542	1.5	3	4	0.92	0.73	1.09	0.72	193
50	19	90	2-2	—	369	514	1.5	9	5	1.09	0.62	0.92	0.61	218
50	19	90	2-2	—	369	468	1.5	19	5	1.09	0.62	0.92	0.61	218
50.7	39.7	45	1-2	—	372	514	1.5	9	5	1.09	0.62	0.92	0.61	218
—	—	—	—	—	350	542	1.5	3	5	1.09	0.62	0.92	0.61	192
50.8	19.05	90	2-2	14.5	372	470	1.5	18	5	1.09	0.62	0.92	0.61	218
50.8	39.69	45	2-2	—	372	516	1.5	8	5	1.09	0.62	0.92	0.61	218
50.8	19.05	90	2-2	—	354	470	4.7	18	5	1.09	0.62	0.92	0.61	218
50.8	34.9	45	1-2	—	347	478	1.5	4	5	0.70	0.97	1.44	0.94	155
—	—	—	—	7.938	334	478	3.5	5	4	0.70	0.97	1.44	0.94	155
—	—	—	—	7.938	334	478	3.5	5	4	0.70	0.97	1.44	0.94	155
—	—	—	—	—	355	546	1.5	3	2.5	1.09	0.62	0.92	0.61	217
—	—	—	—	—	350	532	8	3	3	1.09	0.62	0.92	0.61	217
50.7	19	90	2-2	—	353.5	476	4.7	5	17	1.09	0.62	0.92	0.61	217
—	—	—	—	—	350	582	5.5	2	3	1.09	0.62	0.92	0.61	169

Double Row Steep Slope Tapered Roller Bearings (Inside Direction)

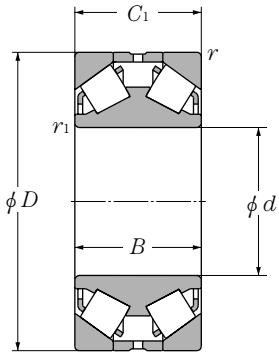

Drawing A

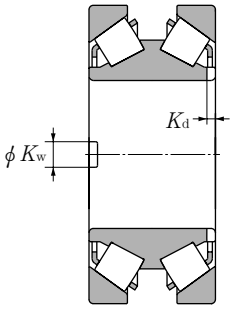

Drawing B

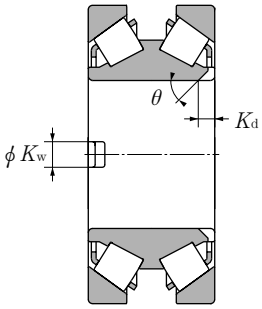

Drawing C

d 330～460mm

Boundary dimensions mm						Basic load ratings dynamic kN	static kN	dynamic kgf	static kgf	Bearing numbers	Drawing No.
d	D	B	C_r	$r_{s\,min}$ ❶	$r_{ls\,min}$ ❶	C_r	C_{or}	C_r	C_{or}		
330	458	120	120	3	3	990	2,220	101,000	226,000	CRD-6604	B
	650	248	248	7.5	6	3,450	6,500	350,000	665,000	CRD-6608	A
350	590	192	192	3	3	2,990	6,400	305,000	655,000	☆CRD-7017	B❷
	618	200	200	6	6	3,000	5,700	310,000	580,000	☆CRD-7004	A❷
360	540	200	200	5	5	2,480	6,150	253,000	630,000	CRD-7201	B
370	630	240	240	5	6	3,550	7,450	365,000	760,000	☆CRD-7401	B
380	559.5	160	160	5	5	1,890	4,250	192,000	435,000	CRD-7614	A
	650	240	240	6	3	3,600	7,950	370,000	810,000	☆CRD-7623	C
	650	240	240	6	3	3,600	7,950	370,000	810,000	☆CRD-7612	B
400	650	200	200	17.4	6	3,050	6,100	310,000	625,000	☆CRD-8010	C
	650	240	240	6	3	3,350	7,450	340,000	760,000	☆CRD-8013	C
	650	240	240	6	4	3,600	8,450	365,000	865,000	☆CRD-8026	C
	650	240	240	6	3	3,350	7,450	340,000	760,000	☆CRD-8027	C
	650	240	240	6	4	3,600	8,450	365,000	865,000	☆CRD-8032	C
	650	240	240	6	6	3,600	8,450	365,000	865,000	☆CRD-8034	C
	650	240	240	6	6	3,600	8,450	365,000	865,000	☆CRD-8035	C
	650	240	240	6	4	3,600	8,450	365,000	865,000	☆CRD-8038	C
	650	240	240	6	4	3,600	8,450	365,000	865,000	☆CRD-8039	C
	650	240	240	6	6	3,600	8,450	365,000	865,000	☆CRD-8042	C
	650	240	240	6	5	3,350	7,450	340,000	760,000	☆CRD-8044	C
	650	240	240	6	6	3,600	8,450	365,000	865,000	☆CRD-8046	D
	650	240	240	6	4	3,600	8,450	365,000	865,000	☆CRD-8047	C
	650	240	240	6	6	3,600	8,450	365,000	865,000	☆CRD-8048	C
	650	240	240	6	6	3,600	8,450	365,000	865,000	☆CRD-8049	C.D❸
	650	240	240	6	3	3,350	7,450	340,000	760,000	☆CRD-8014	C
	650	240	240	6	6	3,350	7,450	340,000	760,000	☆CRD-8023	D
410	580	160	160	4	5	1,890	4,550	192,000	460,000	CRD-8201	B
440	650	155	155	6	6	2,330	5,300	238,000	540,000	☆CRD-8808	A
460	618	150	150	4	4	1,720	4,400	176,000	450,000	CRD-9202	B
	618	150	150	4	4	1,720	4,400	176,000	450,000	CRD-9211	A
	720	250	250	6	2.5	4,450	10,100	450,000	1,030,000	☆CRD-9214	C

❶ Minimum allowable dimension for chamfer dimension r or r_1. ❷ This bearing has slots at the side face of inner ring. ❸ This bearing's shape is half of drawing 3 and 4.
Remarks: 1. Bearing numbers marked "☆" designate bearing with hollow rollers and pin type cages.

Double Row Steep Slope Tapered Roller Bearings (Inside Direction)

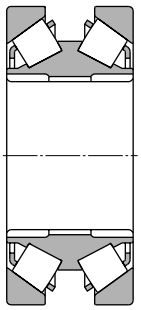

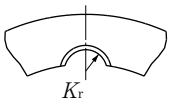

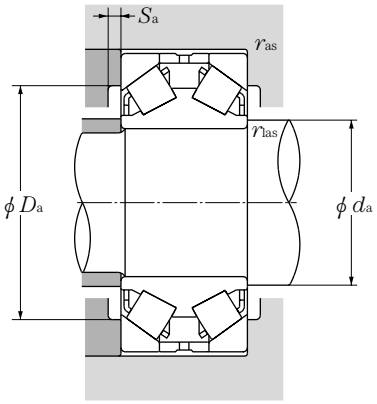

Drawing D

Equivalent bearing load

dynamic

$P_r = XF_r + YF_a$

$\frac{F_a}{F_r} \leqq e$		$\frac{F_a}{F_r} > e$	
X	Y	X	Y
1	Y_1	0.67	Y_2

static

$P_{or} = F_r + Y_o F_a$

For values of e, Y_2 and Y_o see the table below.

Groove dimensions					Abutment and fillet dimensions					Constant	Axial load factors			Mass
mm			numbers	mm	mm									kg
width	depth	angle	×	key groove	d_a	D_a	S_a	r_{as}	r_{las}					
K_w	K_d	θ °	side face	K_r	max	min	min	max	max	e	Y_1	Y_2	Y_o	(approx.)
32	12	90	2-2	—	355.5	444	8	2.5	2.5	1.05	0.64	0.96	0.63	59.7
—	—	—	—	—	407	624	8	5	6	0.90	0.75	1.12	0.73	383
32	12	90	2-2	—	409.5	576	6.5	2.5	2.5	0.55	1.24	1.84	1.21	209
50	20	90	2-2	—	410	510	1.5	5	5	0.87	0.78	1.16	0.76	252
40	12	90	2-2	—	389.5	518	4.7	4	4	0.70	0.97	1.44	0.94	160
34	20	90	2-2	—	420	608	8	5	4	0.76	0.88	1.31	0.86	316
—	—	—	—	—	414.5	537.5	1.5	4	4	0.70	0.97	1.44	0.94	133
50.8	40	45	2-2	—	435	622	1.5	2.5	5	1.05	0.64	0.96	0.63	329
50	15	90	2-2	—	430	622	8	2.5	5	1.05	0.64	0.96	0.63	338.2
50.4	38.1	45	1-2	—	449	618	2.5	5	12	0.81	0.83	1.23	0.81	260
64.3	32	45	1-2	—	437	622	8	2.5	5	1.05	0.64	0.96	0.63	303
63.6	32	45	1-2	—	456	535	2.5	3	5	0.80	0.85	1.26	0.83	303
64.3	32	45	1-2	—	437	622	8	2.5	5	1.05	0.64	0.96	0.63	303
64.3	32	45	1-2	—	454	622	2.5	3	5	0.80	0.85	1.26	0.83	303
64.3	32	45	1-2	—	454	622	1.5	5	5	0.80	0.85	1.26	0.83	303
64.3	32	45	1-2	—	454	622	8	5	5	0.80	0.85	1.26	0.83	303
63.6	32	45	2-2	—	454	622	2.5	3	5	0.80	0.85	1.26	0.83	302
64.3	32	45	1-2	—	454	622	8	4	5	0.80	0.85	1.26	0.83	303
64.3	32	45	1-2	—	454	622	2	5	5	0.80	0.85	1.26	0.83	303
64.3	32	45	1-2	—	437	525	8	4	5	1.05	0.64	0.96	0.63	292
—	—	—	—	11.25	454	622	1.5	5	5	0.80	0.85	1.26	0.83	303
64.3	32	45	1-2	—	454	622	2.5	3	5	0.80	0.85	1.26	0.83	303
64.3	32	45	2-2	—	454	622	1.5	5	5	0.80	0.85	1.26	0.83	303
63.6	32	45	1-2	11.25	454	622	1.5	5	5	0.80	0.85	1.26	0.83	303
64.3	32	45	1-2	—	437	622	8	2.5	5	1.05	0.64	0.96	0.63	303
—	—	—	—	11.25	437	622	8	5	5	1.05	0.64	0.96	0.63	303
50.8	10	90	1-2	—	440	562	1.5	4	3	0.83	0.81	1.21	0.79	133
—	—	—	—	—	487	622	6.5	5	5	0.80	0.85	1.26	0.83	163
50	15	90	2-2	—	489	600	8	3	3	1.05	0.64	0.96	0.63	126
—	—	—	—	—	489.5	600	1.5	3	3	1.05	0.64	0.96	0.63	120
50.8	35	45	2-2	—	500	692	4.8	2	5	0.80	0.85	1.26	0.83	388

Double Row Steep Slope Tapered Roller Bearings (Inside Direction)

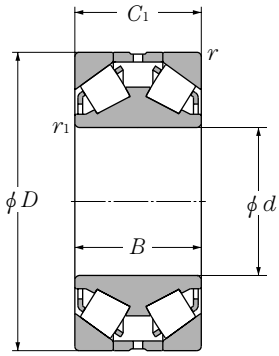

Drawing A

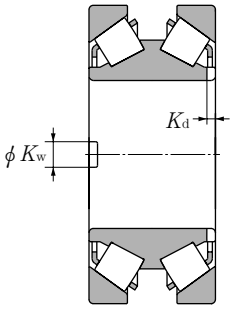

Drawing B

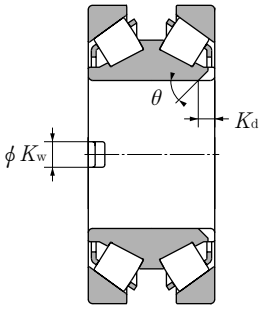

Drawing C

d 470～1,400mm

Boundary dimensions mm						Basic load ratings dynamic / static kN		dynamic / static kgf		Bearing numbers	Drawing No.
d	D	B	C_r	$r_{s\,min}$ ❶	$r_{ls\,min}$ ❶	C_r	C_{or}	C_r	C_{or}		
470	720	216	216	6	6	2,790	6,800	284,000	690,000	CRD-9404	B
480	689.5	180	180	6	6	2,670	6,400	272,000	655,000	☆CRD-9609	B
	690	180	180	6	6	2,670	6,400	272,000	655,000	☆CRD-9603	B
482.600	615.950	158.750	158.750	6.4	3.3	2,240	6,450	228,000	660,000	☆＊CRD-9709	A ❷
	733.500	200.000	200.000	17.5	5	2,740	6,550	279,000	665,000	☆＊CRD-9704	C
509.948	733.425	200.02	200.02	5	5	3,250	8,350	330,000	855,000	☆＊CRD-10208	C
510.134	800.001	284.493	284.493	6.4	6.4	5,200	12,100	530,000	1,230,000	☆＊CRD-10206	C
550	920	330	330	7.5	7.5	6,800	15,700	695,000	1,600,000	☆CRD-11001	B
600	1,000	350	350	7.5	7.5	8,250	19,500	840,000	1,990,000	☆CRD-12002	A
660.000	814.000	176.212	176.212	6.4	3.3	2,600	8,200	266,000	835,000	☆＊CRD-13208	C
685.800	939.800	234.950	228.575	3.3	6.4	4,950	13,500	505,000	1,380,000	☆＊CRD-13702	B
685.876	939.876	234.950	227.813	3.3	6.4	4,950	13,500	505,000	1,380,000	☆＊CRD-13701	C
720	920	130	150	5	4	2,760	7,300	281,000	745,000	☆CRD-14403	A
780	1,000	200	200	5	2	4,200	12,900	430,000	1,320,000	☆CRD-15601	C
1,400	1,600	180	180	5	2.5	4,400	16,300	445,000	1,670,000	CRD-28003	A

❶ Minimum allowable dimension for chamfer dimension r or r_1. ❷ This bearing has a screw groove at inner ring's bore and slots at the side face of inner ring.
Remarks: 1. The marked "＊" bearings are inch system sizes. 2. Bearing numbers marked "☆" designate bearing with hollow rollers and pin type cages.

Double Row Steep Slope Tapered Roller Bearings (Inside Direction)

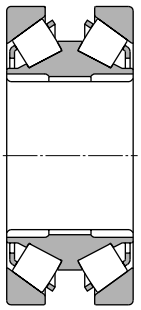

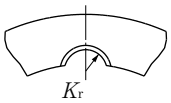

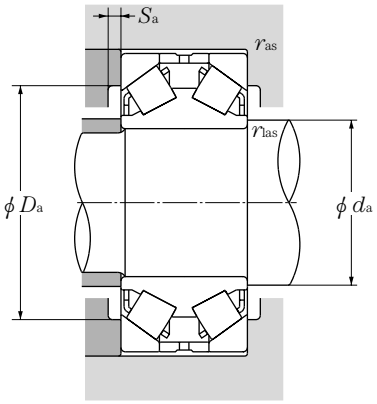

Drawing D

Equivalent bearing load

dynamic

$P_r = XF_r + YF_a$

$\frac{F_a}{F_r} \leqq e$		$\frac{F_a}{F_r} > e$	
X	Y	X	Y
1	Y_1	0.67	Y_2

static

$P_{or} = F_r + Y_o F_a$

For values of e, Y_2 and Y_o see the table below.

Groove dimensions					Abutment and fillet dimensions					Constant	Axial load factors			Mass
mm			numbers	mm	mm									kg
width	depth	angle	×	key groove	d_a	D_a	S_a	r_{as}	r_{las}					
K_w	K_d	θ °	side face	K_r	max	min	min	max	max	e	Y_1	Y_2	Y_o	(approx.)
63.6	30	90	1-2	—	503	692	3	5	5	1.09	0.62	0.92	0.61	315
50	15	90	2-2	—	525	661.5	8	5	5	0.87	0.78	1.16	0.76	223
50	15	90	2-1	—	525	662	8	5	5	0.87	0.78	1.16	0.76	224
—	—	—	—	—	500.5	588	6.5	2.5	5	0.61	1.11	1.66	1.09	115
50.8	38	45	2-2	—	546.5	669.5	8	4	12	1.09	0.62	0.92	0.61	301
50.8	38.1	45	2-2	—	560	711.5	8	4	4	0.87	0.78	1.16	0.76	256
70.358	44.45	45	1-2	12.865	560	772	8	5	5	0.81	0.83	1.23	0.81	511
56	22	90	1-2	—	629.5	884	4.5	6	6	0.87	0.78	1.16	0.76	914
—	—	—	—	—	687	964	8	6	6	0.87	0.78	1.16	0.76	1,130
50	20	45	2-2	—	684.5	886	8	2.5	5	0.70	0.97	1.44	0.94	202
63.5	19.05	90	2-2	—	738	926	1.5	5	2.5	0.70	0.97	1.44	0.94	478
63.5	38.1	45	2-2	—	738.5	926	8	5	2.5	0.70	0.97	1.44	0.94	435
—	—	—	—	—	760.5	898	5.8	3	4	0.81	0.83	1.23	0.81	240
90	35	45	1-2	—	824.5	978	3.6	2	4	0.80	0.85	1.26	0.83	384
—	—	—	—	—	1,437.5	1,578	12.5	2	4	0.55	1.24	1.84	1.21	532

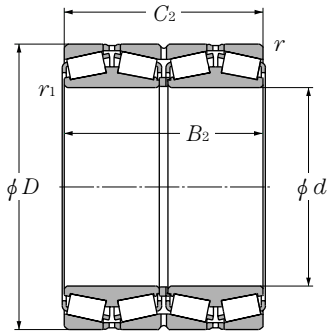

d 100～165.100mm

Boundary dimensions mm						Basic load ratings dynamic kN	static kN	dynamic kgf	static kgf
d	D	B_2	C_2	$r_{s\,min}$ ❶	$r_{ls\,min}$ ❶	C_r	C_{or}	C_r	C_{or}
100	170	155	155	2.5	0.6	595	1,170	61,000	119,000
105	190	210	210	2.5	1	760	1,630	77,500	166,000
110	150	150	150	1.5	1.5	505	1,280	51,500	131,000
120	170	124	124	2	2.5	390	1,020	40,000	104,000
	180	100	100	2	2.5	395	745	40,000	76,000
	200	132	132	2	2.5	640	1,220	65,000	125,000
	210	174	174	2.5	2.5	855	1,710	87,500	174,000
120.650	174.625	141.288	139.703	1.5	0.8	510	1,220	52,000	124,000
127.000	182.562	158.750	158.750	3.3	1.5	660	1,730	67,000	177,000
130	184	134	134	2	2.5	480	1,190	49,000	122,000
135	180	160	160	2	1	500	1,360	51,000	138,000
136.525	190.500	161.925	161.925	3.3	1.5	695	1,900	71,000	193,000
139.700	200.025	157.165	160.340	3.3	0.8	700	1,950	71,500	199,000
140	198	144	144	2	2.5	575	1,460	58,500	149,000
	210	114	114	2	2.5	515	1,070	52,500	109,000
	210	115	115	2	2.5	515	1,070	52,500	109,000
146.050	244.475	192.088	187.325	3.3	1.5	955	1,980	97,000	202,000
150	210	190	190	2.5	1.5	860	2,240	87,500	229,000
	212	155	155	2.5	3	660	1,700	67,500	173,000
152.400	222.250	174.625	174.625	1.5	1.5	930	2,350	94,500	239,000
160	226	165	165	2.5	3	775	2,030	79,000	207,000
	265	173	173	2.5	2.5	1,100	2,270	112,000	231,000
165.100	225.425	165.100	168.275	3.3	0.8	745	2,220	76,000	226,000

❶ Minimum allowable dimension for chamfer dimension r or r_1.

Four Row Tapered Roller Bearings

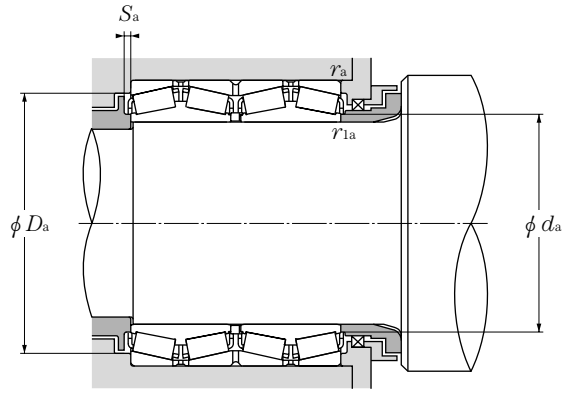

Equivalent bearing load

dynamic

$P_r = XF_r + YF_a$

$\frac{F_a}{F_r} \leqq e$		$\frac{F_a}{F_r} > e$	
X	Y	X	Y
1	Y_1	0.67	Y_2

static

$P_{or} = F_r + Y_o F_a$

For values of e, Y_2 and Y_o see the table below.

Bearing numbers	Abutment and fillet dimensions mm					Constant	Axial load factors			Mass kg
	d_a	D_a	S_a min	r_{as} max	r_{las} max	e	Y_1	Y_2	Y_o	(approx.)
CRO-2008	120	152.5	3.7	2	0.6	0.32	2.12	3.15	2.07	14.5
CRO-2151	135	168.5	2.5	2	1	0.42	1.60	2.38	1.56	26
CRO-2252	119	140.5	1.2	1.5	1.5	0.18	3.66	5.46	3.58	7.7
625924	135	155.5	5	2	2	0.33	2.03	3.02	1.98	8.97
623024	135	166.5	3.8	2	2	0.37	1.80	2.69	1.76	8.87
623124	143	182	4.1	2	2	0.37	1.80	2.69	1.76	16.7
CRO-2418	140	190	4.5	2	2	0.40	1.67	2.50	1.64	22.2
＊M224749D/M224710/M224710D	129	163	3	1.5	0.8	0.33	2.03	3.02	1.98	11.5
＊T-48290D/48220/48220D	137	168	4.5	3.3	1.5	0.31	2.21	3.29	2.16	14.3
625926	144.5	169	5	2	2	0.33	2.03	3.02	1.98	11.3
CRO-2701	143	165	2	2	1	0.33	2.03	3.02	1.98	13.5
＊T-48393D/48320/48320D	144	177	4	3.3	1.5	0.32	2.10	3.13	2.05	14.8
＊T-48680D/48620/48620D	150	185	3	3.3	0.8	0.34	2.01	2.99	1.96	17.3
625928	156	183	5	2	2	0.33	2.03	3.02	1.98	14
623028	159	193	3.5	2	2	0.37	1.84	2.74	1.80	13.8
CRO-2817	159	193	3.4	2	2	0.37	1.84	2.74	1.80	13.9
＊81576D/81962/81963D	163	225	6.5	3.3	1.5	0.35	1.92	2.86	1.88	36.8
CRO-3052	162	192.5	2.5	2	1.5	0.40	1.68	2.50	1.64	20.3
625930	167.5	195	5.5	2	2.5	0.33	2.03	3.02	1.98	16.9
＊T-M231649D/M231610/M231610D	165	207	4	1.5	1.5	0.36	1.87	2.79	1.83	24.7
625932	177.5	208.5	5.5	2	2.5	0.33	2.03	3.02	1.98	20.2
CRO-3209 (CRO-3210)	184	247	4.5	2	2	0.33	2.03	3.02	1.98	37.0
＊T-46791D/46720/46721D	175	209	3	0.8	2.5	0.38	1.76	2.62	1.72	20.7

Remarks: 1. Bearing numbers marked "＊" designate inch system bearings.
2. The bearing where parentheses adhered abolished inner ring spacer.

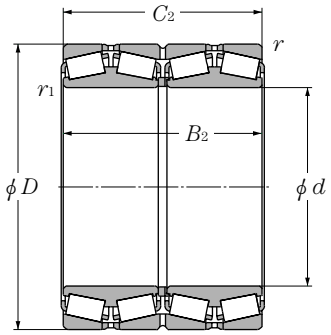

d 170～220mm

Boundary dimensions mm						Basic load ratings dynamic kN	static kN	dynamic kgf	static kgf
d	D	B_2	C_2	$r_{s\,min}$ ❶	$r_{ls\,min}$ ❶	C_r	C_{or}	C_r	C_{or}
170	240	175	175	2.5	3	835	2,200	85,500	224,000
	260	144	144	2.5	3	840	1,730	85,500	176,000
	280	181	181	2.5	2.5	1,150	2,420	117,000	247,000
	280	185	185	2.5	3	1,240	2,540	127,000	259,000
177.800	247.650	192.088	192.088	3.3	1.5	1,000	2,760	102,000	281,000
	279.400	234.950	234.947	3.3	1.5	1,420	3,400	145,000	345,000
	304.800	238.227	233.365	3.3	3.3	1,580	3,100	161,000	320,000
180	250	185	185	2	2.5	895	2,350	91,500	239,000
	254	185	185	2.5	3	910	2,390	93,000	244,000
	300	280	280	3	3	2,160	4,800	220,000	490,000
187.325	269.875	211.138	211.138	3.3	1.5	1,240	3,400	127,000	345,000
190.000	268	196	196	2.5	3	1,060	2,850	108,000	291,000
	270	190	190	2.5	2.5	1,080	2,940	111,000	300,000
	270	190	190	2.5	0.6	1,220	3,050	125,000	310,000
	292.100	225.425	225.425	3.3	1.5	1,570	4,150	160,000	425,000
190.500	266.700	187.325	188.912	3.3	1.5	1,040	2,990	106,000	305,000
198.438	284.162	225.425	225.425	3.3	1.5	1,530	4,000	156,000	410,000
200	282	206	206	2.5	3	1,200	3,300	122,000	335,000
	290	160	160	2.5	2.5	925	2,210	94,500	226,000
	310	200	200	3	3	1,530	3,300	156,000	340,000
203.200	317.500	215.900	209.550	3.3	3.3	1,270	2,820	129,000	288,000
206.375	282.575	190.500	190.500	3.3	0.8	1,120	2,890	114,000	294,000
215.900	288.925	177.800	177.800	3.3	0.8	1,110	3,250	114,000	335,000
216.103	330.200	263.525	269.875	3.3	1.5	2,000	5,150	204,000	525,000
220	300	230	230	2.5	2.5	1,360	3,650	138,000	375,000
	310	226	226	3	4	1,380	3,800	141,000	385,000
	320	200	200	3	1	1,390	3,400	141,000	345,000

❶ Minimum allowable dimension for chamfer dimension r or r_1.

Four Row Tapered Roller Bearings

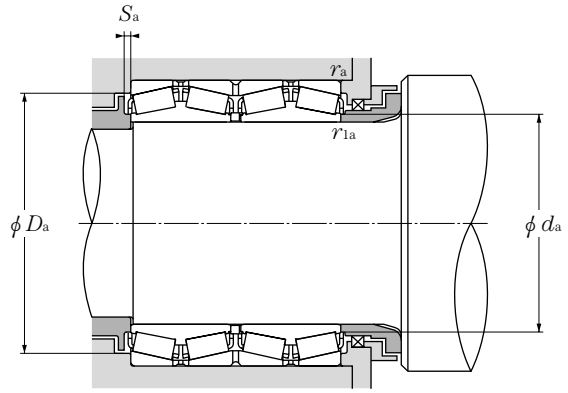

Equivalent bearing load

dynamic

$P_r = XF_r + YF_a$

$\frac{F_a}{F_r} \leqq e$		$\frac{F_a}{F_r} > e$	
X	Y	X	Y
1	Y_1	0.67	Y_2

static

$P_{or} = F_r + Y_o F_a$

For values of e, Y_2 and Y_o see the table below.

Bearing numbers	Abutment and fillet dimensions mm					Constant	Axial load factors			Mass kg
	d_a	D_a	S_a min	r_{as} max	r_{las} max	e	Y_1	Y_2	Y_o	(approx.)
625934	187.5	220	5.5	2	2.5	0.33	2.03	3.02	1.98	24.4
623034	192.5	239	3.8	2	2.5	0.37	1.80	2.69	1.76	27.5
CRO-3409	192	255	5	2	2	0.40	1.68	2.50	1.64	44
623134	197	253.5	6.4	2	2.5	0.37	1.80	2.69	1.76	45.2
＊67791D/67720/67721D (CRO-3664)	190	229	5	3.3	1.5	0.44	1.54	2.29	1.48	29.4
＊82681D/82620/82620D	195	251	5	1.5	3.3	0.53	1.28	1.91	1.25	55.3
＊EE280700D/281200/281201D (CRO-3663)	198	279	7	3.3	3.3	0.36	1.87	2.79	1.83	69.9
CRO-3658	195	229	3.1	2	2.5	0.44	1.54	2.30	1.51	27.5
625936	200.5	233.5	5.5	2	2.5	0.33	2.03	3.02	1.98	28.9
CRO-3617	201	274	5	2.5	2.5	0.37	1.80	2.69	1.76	69.4
＊M238849D/M238810/M238810D	199.9	250	4	3.3	1.5	0.33	2.03	3.02	1.98	41.8
625938	209	245.5	6	2	2.5	0.33	2.03	3.02	1.98	34.7
CRO-3812	205	250	6	2	2	0.33	2.03	3.02	1.98	34.7
CRO-3813	207	248.5	2.5	2	0.6	0.40	1.68	2.50	1.64	34.5
＊M241538D/M241510/M241510D	222	271	5	3.3	1.5	0.33	2.03	3.02	1.98	59.6
＊T-67885D/67820/67820D	204	246	3	1.5	2.5	0.48	1.41	2.11	1.38	33.6
＊M240648D/M240611/M240611D	212	264	5.5	3.3	1.5	0.33	2.03	3.02	1.98	46
625940	219.5	258	6	2	2.5	0.33	2.03	3.02	1.98	40.5
CRO-4013	221	271	5	2	2	0.37	1.80	2.69	1.76	35.1
CRO-4014	222	284	6	2.5	2.5	0.39	1.74	2.59	1.70	54.0
＊EE132082D/132125/132126D	224	294	9.5	3.3	3.3	0.31	2.15	3.20	2.10	62.5
＊T-67986D/67920/67920D	219	260	5	3.3	0.8	0.51	1.33	1.97	1.30	35.4
＊T-LM742749D/LM742714/LM742714D	227	267	5	0.8	2.5	0.48	1.40	2.09	1.37	34.3
＊9974D/9920/9920D	235	277	6	3.3	1.5	0.55	1.23	1.82	1.20	82.1
CRO-4412	236.5	277.5	6.5	0	2	0.43	1.59	2.36	1.55	42.1
625944	242	284.5	6	2.5	3	0.33	2.03	3.02	1.98	53.5
CRO-4411	245	294.5	6.5	2.5	2	0.35	1.95	2.90	1.91	53

Remarks: 1. Bearing numbers marked "＊" designate inch system bearings.
2. The bearing where parentheses adhered abolished inner ring spacer.

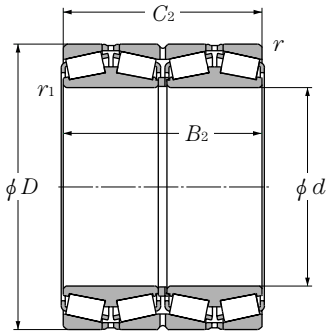

d 220～266.700mm

Boundary dimensions mm						Basic load ratings dynamic kN	static kN	dynamic kgf	static kgf
d	D	B_2	C_2	$r_{s\,min}$ ❶	$r_{ls\,min}$ ❶	C_r	C_{or}	C_r	C_{or}
220	340	190	190	3	4	1,510	3,300	154,000	335,000
	340	194	194	3	3	1,510	3,300	154,000	335,000
220.662	314.325	239.712	239.712	3.3	1.5	1,840	4,900	187,000	500,000
228.600	364.000	296.875	296.875	3.3	3.3	2,370	5,550	242,000	565,000
	425.450	349.250	361.950	6.4	3.5	3,450	8,250	355,000	845,000
234.950	327.025	196.850	196.850	3.3	1.5	1,370	3,700	140,000	380,000
240	338	248	248	3	4	1,870	4,950	191,000	505,000
241.478	350.838	228.600	228.600	3.3	1.5	1,610	4,000	164,000	410,000
244.475	327.025	193.675	193.675	3.3	1.5	1,430	4,100	146,000	415,000
	381.000	304.800	304.800	4.8	3.3	2,220	5,750	227,000	590,000
245	380	255.5	254	6.4	1.5	2,060	4,750	210,000	485,000
250	365	270	270	3	1.5	2,150	6,150	219,000	630,000
	365	270	270	3	2	2,150	6,150	219,000	630,000
	370	220	220	4	4	2,050	5,750	209,000	590,000
254.000	358.775	269.875	269.875	3.3	3.3	2,390	6,550	244,000	670,000
	368.300	204.622	204.470	3.3	1.5	1,350	3,250	138,000	330,000
	444.500	279.400	279.400	6.4	3.3	2,890	5,900	294,000	600,000
260	360	272	272	2.5	1	2,080	5,750	212,000	585,000
	368	268	268	4	5	1,990	5,700	203,000	580,000
	400	220	220	4	5	1,970	4,400	201,000	445,000
	400	255	255	7.5	4	2,210	5,300	225,000	540,000
260.350	365.125	228.600	228.600	6.4	3.3	1,750	4,550	178,000	465,000
	400.050	255.588	253.995	6.4	1.5	2,090	4,950	213,000	505,000
	422.275	314.325	317.500	3.3	6.4	2,980	7,100	305,000	725,000
266.700	355.600	230.188	228.600	3.3	1.5	1,840	5,350	188,000	545,000
	355.600	230.188	228.600	3.3	1.5	1,430	4,350	146,000	445,000
	393.700	269.878	269.878	6.4	3.3	2,110	6,000	216,000	610,000

❶ Minimum allowable dimension for chamfer dimension r or r_1.

Four Row Tapered Roller Bearings

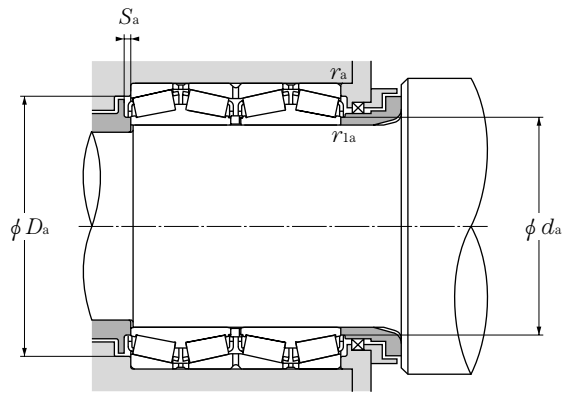

Equivalent bearing load

dynamic

$P_r = XF_r + YF_a$

$\frac{F_a}{F_r} \leqq e$		$\frac{F_a}{F_r} > e$	
X	Y	X	Y
1	Y_1	0.67	Y_2

static

$P_{or} = F_r + Y_o F_a$

For values of e, Y_2 and Y_o see the table below.

Bearing numbers	Abutment and fillet dimensions mm					Constant	Axial load factors			Mass kg
	d_a	D_a	S_a min	r_{as} max	r_{las} max	e	Y_1	Y_2	Y_o	(approx.)
623044	250.5	312.5	5.5	2.5	3	0.37	1.80	2.69	1.76	63.2
CRO-4409	250.5	312.5	6	2.5	2.5	0.37	1.80	2.69	1.76	64.5
∗T-M244249D/M244210/M244210D	235	293	4	1.5	2.5	0.33	2.03	3.02	1.98	60.2
CRO-4606	262	332	6.5	3.3	3.3	0.32	2.12	3.15	2.07	117.9
∗EE700090D/700167/700168D	263	381	3	6.4	3.5	0.33	2.03	3.02	1.98	232
∗T-8576D/8520/8520D	250	305	5	3.3	1.5	0.41	1.66	2.47	1.62	53.6
625948A (CRO-4825)	260.5	312	6	3	2.5	0.33	2.03	3.02	1.98	70
∗EE127097D/127137/127137D	262	325	6.5	3.3	1.5	0.35	1.91	2.85	1.87	76.4
∗LM247748D/LM247710/LM247710DA	257	310	5	3.3	1.5	0.32	2.09	3.11	2.04	46.1
∗EE126096D/126150/126151D	262	343	6.5	3.3	4.8	0.52	1.31	1.95	1.28	132
CRO-4901	275.5	344.5	6.5	6.4	1.5	0.37	1.80	2.69	1.76	106.7
CRO-5004	275	339	5	2.5	1.5	0.33	2.03	3.02	1.98	82.1
CRO-5012	279	332.5	6	3	2	0.33	2.03	3.02	1.98	96.7
CRO-5001	276	344	6	3	3	0.26	2.55	3.80	2.49	87
∗T-M249748D/M249710/M249710D	272.5	335	5	2.5	2.5	0.33	2.03	3.02	1.98	85.6
∗EE171000D/171450/171451D	269	340	6	3.3	1.5	0.36	1.85	2.76	1.81	71.8
∗EE822101D/822175/822176D	289	406	8	6.4	3.3	0.34	1.98	2.94	1.93	185
CRO-5218	279	332.5	6.5	2.5	1	0.41	1.66	2.47	1.62	74.2
625952	287	338.5	6	3	3	0.33	2.03	3.02	1.98	90.3
623052	292	366.5	6.5	3	3	0.37	1.80	2.69	1.76	98.9
CRO-5215	290	359	8	6	3	0.39	1.71	2.54	1.67	106
∗EE134102D/134143/134144D	282	340	6.5	6.4	3.3	0.37	1.80	2.69	1.76	76.5
∗EE221027D/221575/221576D	292	367	8	6.4	1.5	0.39	1.71	2.54	1.67	117
∗HM252349D/HM252310/HM252310D	290	392	5.5	3.3	6.4	0.33	2.03	3.02	1.98	180
∗T-LM451349D/LM451310/LM451310D (CRO-5307)	281	335	6.5	3.3	1.5	0.36	1.87	2.79	1.83	62
∗CRO-5305	281	330.5	3.5	3.3	1.5	0.37	1.83	2.72	1.79	62.3
∗EE275106D/275155/275156D	292	367	5	6.4	3.3	0.40	1.68	2.50	1.64	116

Remarks: 1. Bearing numbers marked "∗" designate inch system bearings.
2. The bearing where parentheses adhered abolished inner ring spacer.

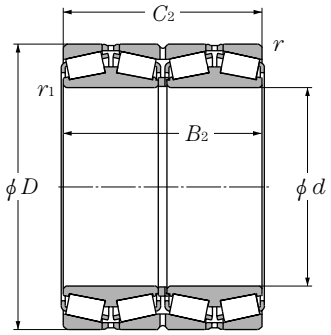

d 269.875～304.800mm

Boundary dimensions mm						Basic load ratings dynamic kN	static kN	dynamic kgf	static kgf
d	D	B_2	C_2	$r_{s\,min}$ ❶	$r_{ls\,min}$ ❶	C_r	C_{or}	C_r	C_{or}
269.875	381.000	282.575	282.575	3.3	3.3	2,470	6,850	252,000	700,000
270	410	222	222	4	4	1,910	4,550	195,000	465,000
275	385	200	200	3	3	1,610	4,250	165,000	435,000
276.225	406.400	268.290	260.355	6.4	1.5	2,110	6,000	216,000	610,000
279.400	381.000	269.875	269.875	3.3	1.5	2,240	6,450	229,000	655,000
	393.700	269.875	269.875	6.4	1.5	1,940	5,350	197,000	545,000
	419.100	292.100	292.100	6.4	3.3	2,770	6,950	283,000	705,000
	469.900	346.075	349.250	3.3	6.4	3,500	8,700	355,000	885,000
279.578	380.898	244.475	244.475	3.3	1.5	1,950	6,200	199,000	635,000
280	380	290	290	3.1	1.7	2,470	7,250	252,000	740,000
	395	288	288	4	5	2,560	7,100	261,000	725,000
285.750	380.898	244.475	244.475	3.3	1.5	1,950	6,200	199,000	635,000
288.925	406.400	298.450	298.450	3.3	3.3	2,980	8,300	305,000	850,000
292.100	476.250	296.047	292.100	3.3	1.5	3,050	6,800	310,000	695,000
300	424	310	310	4	5	2,570	7,450	262,000	760,000
	430	280	280	4	4	2,690	7,100	275,000	725,000
	430	300	300	4	4	2,690	7,100	275,000	725,000
	460	360	360	4	4	4,050	10,100	415,000	1,030,000
	470	270	270	4	4	3,200	7,250	325,000	740,000
	470	292	292	4	4	3,500	8,300	360,000	845,000
	500	332	332	5	6	3,600	8,100	370,000	825,000
300.038	422.275	311.150	311.150	3.3	3.3	3,350	9,600	340,000	980,000
304.648	438.048	279.400	279.400	3.3	3.3	2,470	6,500	252,000	665,000
	438.048	280.990	279.400	4.8	3.3	2,630	6,900	268,000	700,000
304.800	419.100	269.875	269.875	6.4	1.5	2,390	6,850	244,000	695,000
	444.500	247.650	241.300	1.5	8	1,850	4,600	188,000	470,000

❶ Minimum allowable dimension for chamfer dimension r or r_1.

Four Row Tapered Roller Bearings

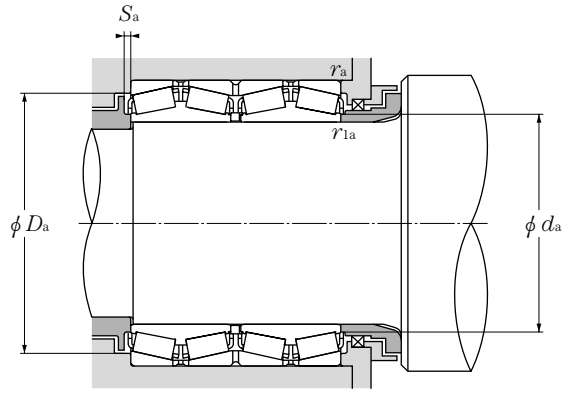

Equivalent bearing load

dynamic

$P_r = XF_r + YF_a$

$\frac{F_a}{F_r} \leqq e$		$\frac{F_a}{F_r} > e$	
X	Y	X	Y
1	Y_1	0.67	Y_2

static

$P_{or} = F_r + Y_o F_a$

For values of e, Y_2 and Y_o see the table below.

Bearing numbers	Abutment and fillet dimensions mm					Constant	Axial load factors			Mass kg
	d_a	D_a	S_a min	r_{as} max	r_{las} max	e	Y_1	Y_2	Y_o	(approx.)
＊T-M252349D/M252310/M252310D	290	356	6	2.5	2.5	0.33	2.03	3.02	1.98	97.5
CRO-5403	305	382	6	3	3	0.27	2.49	3.71	2.43	91
CRO-5501	300	355	6	2.5	2.5	0.40	1.68	2.50	1.64	62.5
＊EE275109D/275160/275161D	293.6	366	8	6.4	1.5	0.40	1.68	2.69	1.64	122
＊CRO-5628	298.5	353	5	2.5	1.5	0.37	1.80	2.69	1.76	79.6
＊EE135111D/135155/135156D	297	368	6.5	5	1.5	0.40	1.68	2.50	1.64	103
CRO-5614	312.5	383.5	6	5	2.5	0.37	1.80	2.69	1.76	141
＊EE722111D/722185/722186D	316	432	5	3.3	6.4	0.37	1.78	2.65	1.74	258
＊T-LM654644D/LM654610/LM654610D (CRO-5679)	297	356	5	3.3	1.5	0.43	1.56	2.33	1.52	83.2
CRO-5650 (CRO-5676)	300	354	6.5	2.5	1.5	0.33	2.03	3.02	1.98	105
625956 (CRO-5684)	304.5	363.5	7	3	4	0.33	2.03	3.02	1.98	111
＊T-LM654648D/LM654610/LM654610D (CRO-5710)	302	356	5	1.5	2.5	0.43	1.56	2.33	1.53	82.5
＊M255449D/M255410/M255410DA	310	379	5	3.3	3.3	0.34	2.00	2.98	1.96	125
＊EE921150D/921875/921876D	321	441	7	3.3	1.5	0.29	2.30	3.42	2.25	208
625960	329	389.5	7	3	4	0.33	2.03	3.02	1.98	138
CRO-6019	325.5	395.5	8	3	3	0.47	1.45	2.16	1.42	132
CRO-6022	323	394	3	3	3	0.47	1.45	2.16	1.42	141
CRO-6015	330	427	10	3	3	0.31	2.21	3.29	2.16	180
☆CRO-6012	338	438	7	3	3	0.37	1.80	2.69	1.76	152
☆CRO-6013 (CRO-6033)	336	437	7	3	3	0.37	1.80	2.69	1.76	164
623160	346.5	449	5	4	4	0.40	1.68	2.50	1.64	257
☆＊T-HM256849D/HM256810/HM256810DG2	322	394	6	3.3	3.3	0.34	2.00	2.98	1.95	143
＊EE329119D/329172/329173D	328	409	8	3.3	3.3	0.33	2.04	3.04	2.00	143
＊M757448D/M757410/M757410D	328	407	7	4.8	3.3	0.47	1.43	2.12	1.39	140
＊M257149D/M257110/M257110D	322	392	5	6.4	1.5	0.33	2.03	3.02	1.98	115
＊EE291202D/291750/291751D	328	416	9.5	1.5	8	0.38	1.78	2.65	1.74	127

Remarks: 1. Bearing numbers marked "＊" designate inch system bearings. 2. Bearing numbers marked "☆" designate bearing with hollow rollers and pin type cages.
3. The bearing where parentheses adhered abolished inner ring spacer.

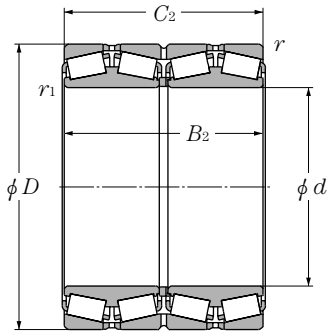

d 304.800～355mm

Boundary dimensions mm						Basic load ratings dynamic kN	static kN	dynamic kgf	static kgf
d	D	B_2	C_2	$r_{s\,min}$ ❶	$r_{ls\,min}$ ❶	C_r	C_{or}	C_r	C_{or}
304.800	495.300	342.900	349.250	6.4	3.3	3,650	9,400	370,000	960,000
304.902	412.648	266.700	266.700	3.3	3.3	2,610	7,450	267,000	760,000
305.003	438.048	280.990	279.400	4.8	3.3	2,630	6,900	268,000	700,000
310	430	310	310	4	2.2	2,880	8,100	294,000	825,000
	430	310	310	5.5	2.2	3,050	8,600	310,000	875,000
317.500	422.275	269.875	269.875	3.3	1.5	2,260	7,050	231,000	715,000
	447.675	327.025	327.025	3.3	3.3	3,400	9,550	345,000	995,000
320	460	338	338	4	5	2,940	8,650	300,000	880,000
327	445	230	230	4	2	2,150	5,650	219,000	575,000
330	470	340	340	2.5	2.5	3,150	10,200	320,000	1,040,000
	510	340	340	6	6	3,900	9,650	395,000	985,000
330.200	482.600	306.388	311.150	3.3	1.5	2,810	7,900	287,000	805,000
	533.400	254.000	254.000	6	6	3,200	6,750	330,000	690,000
333.375	469.900	342.900	342.900	3.3	3.3	4,000	11,000	405,000	1,130,000
340	480	350	350	5	6	3,450	10,400	350,000	1,060,000
	520	278	278	5	6	3,250	7,500	330,000	765,000
341.312	457.098	254.000	254.000	3.3	1.5	2,370	6,900	241,000	705,000
342.900	533.400	307.985	301.625	3.3	3.3	3,150	6,900	320,000	705,000
343.052	457.098	254.000	254.000	3.3	1.5	2,370	6,900	241,000	705,000
	457.098	254.000	254.000	3.3	1.5	2,430	6,750	248,000	685,000
346.075	488.950	358.775	358.775	3.3	3.3	4,350	12,800	445,000	1,300,000
347.662	469.900	292.100	292.100	3.3	3.3	3,200	9,100	325,000	925,000
355	490	316	316	3.3	1.5	3,500	10,000	355,000	1,020,000

❶ Minimum allowable dimension for chamfer dimension r or r_1.

Four Row Tapered Roller Bearings

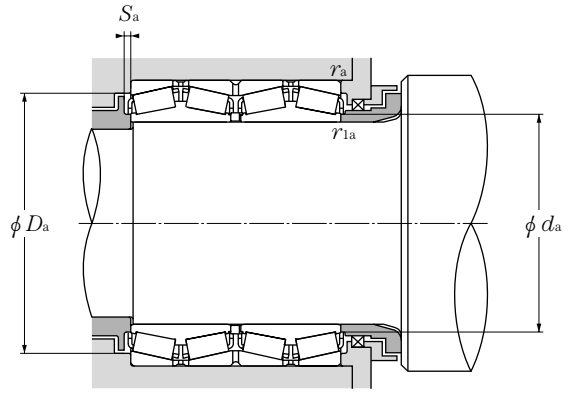

Equivalent bearing load

dynamic

$P_r = XF_r + YF_a$

$\frac{F_a}{F_r} \leqq e$		$\frac{F_a}{F_r} > e$	
X	Y	X	Y
1	Y_1	0.67	Y_2

static

$P_{or} = F_r + Y_o F_a$

For values of e, Y_2 and Y_o see the table below.

Bearing numbers	Abutment and fillet dimensions mm					Constant	Axial load factors			Mass kg
	d_a	D_a	S_a min	r_{as} max	r_{las} max	e	Y_1	Y_2	Y_o	(approx.)
＊EE724121D/724195/724196D	330	450	3	6.4	3.3	0.40	1.68	2.50	1.64	273
＊M257248D/M257210/M257210D	325	388	5	3.3	3.3	0.32	2.12	3.15	2.07	107
＊M757449D/M757410/M757410D	328	407	7	4.8	3.3	0.47	1.43	2.12	1.39	139
CRO-6213	333	396.5	8.5	3	2	0.40	1.68	2.50	1.64	133
CRO-6204	333.5	397.5	7.5	4	2	0.33	2.03	3.02	1.98	136
LM258649D/LM258610/LM258610D (CRO-6431)	334	398	7	3.3	1.5	0.32	2.10	3.13	2.06	110
＊T-HM259049D/HM259010/HM259010D	339.6	418	5	2.5	2.5	0.33	2.02	3.00	1.97	161
625964	355	420.5	7	3	4	0.33	2.03	3.02	1.98	183
CRO-6501	353.5	416	5.5	3	2	0.33	2.03	3.02	1.98	99.8
CRO-6604	366	440	5.5	2	2	0.33	2.02	3.00	1.97	141
CRO-6602	366	469	5	5	5	0.40	1.68	2.50	1.64	221
＊EE526131D/526190/526191D	351	448	3	3.3	1.5	0.39	1.72	2.56	1.68	197
＊CRO-6606	378.5	488	6.5	5	5	0.37	1.80	2.69	1.76	221
＊HM261049D/HM261010/HM261010DA	357	439	5	2.5	2.5	0.33	2.02	3.00	1.97	187
625968	373	440	7	4	5	0.33	2.03	3.02	1.98	200
623068	382.5	478	6.5	4	4	0.37	1.80	2.69	1.76	213
＊LM761648D/LM761610/LM761610D	359	432	5	1.5	2.5	0.47	1.43	2.12	1.40	125
＊EE971355D/972100/972103D	378	502	11	3.3	3.3	0.33	2.03	3.02	1.98	252
＊LM761649D/LM761610/LM761610D (CRO-6945)	361	432	5	3.3	1.5	0.47	1.43	2.12	1.39	117
CRO-6910 (CRO-6944)	361	426	5	3.3	1.5	0.47	1.43	2.12	1.40	105
☆＊T-HM262749D/HM262710/HM262710DG2	371	456	6	2.5	2.5	0.33	2.02	3.00	1.97	227
＊M262449D/M262410/M262410D	369	443	8	3.3	3.3	0.33	2.03	3.02	1.98	148
CRO-7105	378	450	7	3.3	1.5	0.33	2.03	3.02	1.98	170

Remarks: 1. Bearing numbers marked "＊" designate inch system bearings. 2. Bearing numbers marked "☆" designate bearing with hollow rollers and pin type cages.
3. The bearing where parentheses adhered abolished inner ring spacer.

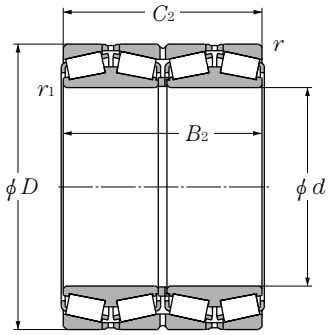

d 355.600～406.400mm

Boundary dimensions mm						Basic load ratings dynamic kN	static kN	dynamic kgf	static kgf
d	D	B_2	C_2	$r_{s\,min}$ ❶	$r_{ls\,min}$ ❶	C_r	C_{or}	C_r	C_{or}
355.600	444.500	241.300	241.300	3.3	1.5	1,760	6,200	180,000	635,000
	457.200	252.412	252.412	3.3	1.5	2,470	7,850	251,000	800,000
	482.600	265.112	269.875	3.3	1.5	2,790	7,650	285,000	780,000
	488.950	317.500	317.500	3.3	1.5	3,500	10,000	350,000	1,020,000
360	508	370	370	5	6	3,700	11,200	380,000	1,140,000
	520	370	370	5.5	3.5	4,500	12,300	455,000	1,260,000
	520	410	410	5	5	5,150	14,700	525,000	1,500,000
	540	340	340	5	3	4,350	11,100	445,000	1,130,000
	600	540	540	5	5	6,700	18,100	685,000	1,840,000
	600	396	396	5	6	5,500	13,000	560,000	1,320,000
368.300	523.875	382.588	382.588	6.4	3.3	4,450	13,100	455,000	1,330,000
	596.900	342.900	342.900	6.4	6.4	4,600	10,600	470,000	1,090,000
374.650	501.650	250.825	260.350	3.3	1.5	2,360	6,250	241,000	640,000
380	536	390	390	5	6	4,900	14,100	500,000	1,440,000
	560	282	282	5	6	3,550	8,700	365,000	890,000
	560	285	285	5	5	3,250	7,700	330,000	785,000
	560	360	360	6	1.5	4,650	12,100	470,000	1,230,000
	560	360	360	5	1.5	5,050	13,500	515,000	1,380,000
384.175	546.100	400.050	400.050	6.4	3.3	5,400	16,100	550,000	1,640,000
385.762	514.350	317.500	317.500	3.3	3.3	3,650	11,100	370,000	1,130,000
390	510	350	350	3.5	1.5	3,700	11,800	375,000	1,210,000
393.700	546.100	288.925	288.925	6.4	1.5	3,200	10,200	325,000	1,040,000
395	545	268.7	288.7	7.5	4	2,970	8,650	305,000	880,000
400	560	380	380	5	5	4,800	14,100	490,000	1,440,000
	564	412	412	5	6	4,850	14,700	495,000	1,500,000
	635	470	470	5	2.5	7,200	18,000	735,000	1,840,000
406.400	546.100	268.288	288.925	6.4	1.5	2,290	6,550	233,000	670,000
	546.100	288.925	288.925	6.4	1.5	3,200	10,200	325,000	1,040,000

❶ Minimum allowable dimension for chamfer dimension r or r_1.

Four Row Tapered Roller Bearings

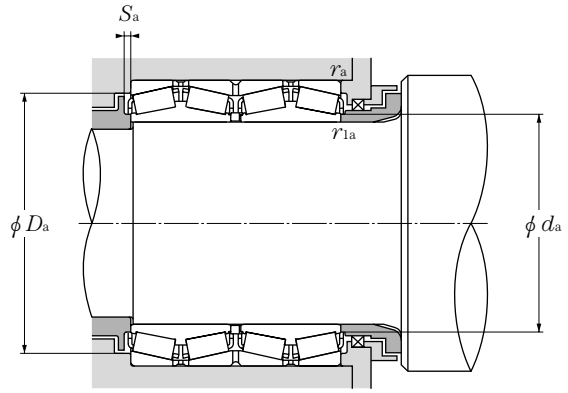

Equivalent bearing load

dynamic

$P_r = XF_r + YF_a$

$\frac{F_a}{F_r} \leqq e$		$\frac{F_a}{F_r} > e$	
X	Y	X	Y
1	Y_1	0.67	Y_2

static

$P_{or} = F_r + Y_o F_a$

For values of e, Y_2 and Y_o see the table below.

Bearing numbers	Abutment and fillet dimensions mm					Constant	Axial load factors			Mass kg
	d_a	D_a	S_a min	r_{as} max	r_{las} max	e	Y_1	Y_2	Y_o	(approx.)
＊L163149D/L163110/L163110D	370	422	6.5	3.3	1.5	0.31	2.20	3.27	2.15	89.5
＊LM263149D/LM263110/LM263110D	372	434	6	3.3	1.5	0.32	2.12	3.15	2.07	106
＊LM763449D/LM763410/LM763410D	375	453	3	3.3	1.5	0.47	1.43	2.14	1.40	145
＊M263349D/M263310/M263310D (CRO-7123)	374	459	5	3.3	1.5	0.33	2.03	3.02	1.98	173
625972 (CRO-7227)	394	466.5	7	4	5	0.33	2.03	3.02	1.98	236
CRO-7220	391	0	5	4.5	3	0.33	2.03	3.02	1.98	260
☆CRO-7217	396	478	8.5	4	4	0.33	2.03	3.02	1.98	297
CRO-7211	400	496	5	4	2.5	0.33	2.03	3.02	1.98	270
CRO-7210	400	550	8	4	4	0.36	1.89	2.81	1.98	520
623172 (CRO-7228)	414.6	541.5	8	4	4.5	0.40	1.68	2.50	1.64	447
☆＊HM265049D/HM265010/HM265010DG2 (CRO-7406)	393.7	487	6	6.4	3.3	0.33	2.03	3.02	1.98	280
＊EE181455D/182350/182351D	421	541	7.5	6.4	6.4	0.42	1.62	2.42	1.59	373
＊LM765149D/LM765110/LM765110D	393	472	2	3.3	1.5	0.47	1.43	2.12	1.40	145
625976	410	494	8	4	5	0.33	2.03	3.02	1.98	277
623076	421	518	6.5	4	4	0.37	1.80	2.69	1.76	240
CRO-7612	417	525	7	4	4	0.40	1.68	2.50	1.64	208
CRO-7622	416	514	7	5	1.5	0.40	1.68	2.50	1.64	302.22
☆CRO-7621	423	515	6.5	4	1.5	0.40	1.68	2.50	1.64	312
☆＊T-HM266449D/HM266410/HM266410DG2	411	507	6.5	6.4	3.3	0.33	2.03	3.02	1.98	312
＊LM665949D/LM665910/LM665910D	409	482	7	2.5	2.5	0.42	1.61	2.40	1.58	240
CRO-7801	411	478	7	3	1.5	0.33	2.03	3.02	1.98	186
＊LM767745D/LM767710/LM767710D	418	510	6.5	6.4	1.5	0.48	1.42	2.11	1.38	219
CRO-7901	434	508	3	6	3	0.48	1.42	2.11	1.39	200
☆CRO-8005	436	515	8	4	4	0.40	1.68	2.50	1.64	300
625980	434	518.5	7	4	5	0.33	2.03	3.02	1.98	324
CRO-8010	447	579	6.5	4	2	0.33	2.03	3.02	1.98	564
＊EE234161D/234215/234216D	438	505	1.5	6.4	1.5	0.47	1.43	2.12	1.40	190
＊LM767749D/LM767710/LM767710D	427	510	6.5	6.4	1.5	0.48	1.42	2.11	1.38	201

Remarks: 1. Bearing numbers marked "＊" designate inch system bearings. 2. Bearing numbers marked "☆" designate bearing with hollow rollers and pin type cages.
3. The bearing where parentheses adhered abolished inner ring spacer.

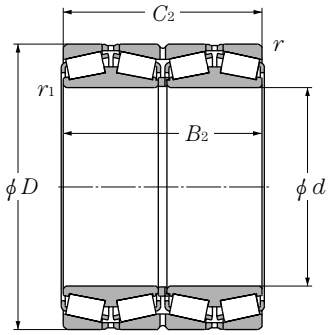

d 406.400～488.950mm

Boundary dimensions mm						Basic load ratings dynamic kN	static kN	dynamic kgf	static kgf
d	D	B_2	C_2	$r_{s\,min}$ ❶	$r_{1s\,min}$ ❶	C_r	C_{or}	C_r	C_{or}
406.400	565.150	381.000	381.000	6.4	3.3	4,750	14,100	485,000	1,440,000
	590.550	400.050	400.050	6.4	3.3	4,850	13,600	490,000	1,380,000
	609.600	309.562	317.500	6.4	3.5	3,700	9,600	380,000	980,000
409.575	546.100	334.962	334.962	6.4	1.5	4,100	12,700	415,000	1,290,000
415.925	590.550	434.975	434.975	6.4	3.3	6,300	18,900	640,000	1,930,000
420	592	432	432	5	6	5,350	16,300	545,000	1,660,000
	650	460	460	5	5	6,950	18,300	710,000	1,870,000
431.800	571.500	279.400	279.400	3.3	1.5	3,200	9,850	330,000	1,010,000
	571.500	336.550	336.550	6.4	1.5	3,700	11,800	380,000	1,200,000
	635.000	355.600	355.600	6.4	6.4	5,650	15,000	580,000	1,530,000
432.003	609.524	317.500	317.500	6.4	3.5	4,350	11,500	445,000	1,170,000
440	620	454	454	6	6	6,500	19,900	665,000	2,030,000
	635	470	470	6.4	3.3	7,100	22,100	725,000	2,260,000
	650	355	355	7.5	4	5,350	13,400	545,000	1,370,000
	650	460	460	6	6	6,750	20,700	690,000	2,110,000
447.675	635.000	463.550	463.550	6.4	3.3	7,100	22,100	725,000	2,260,000
457.200	596.900	276.225	279.400	3.3	1.5	2,900	9,150	296,000	935,000
	596.900	276.225	279.400	3.3	1.6	2,870	9,400	292,000	955,000
	660.400	323.850	323.847	6.4	3.3	4,150	11,200	425,000	1,140,000
460	650	474	474	6	6	6,500	19,900	665,000	2,030,000
475	660	450	450	5	3	6,300	20,400	645,000	2,080,000
480	678	494	494	6	6	6,250	19,600	640,000	2,000,000
	678	494	494	6	6	6,250	19,600	640,000	2,000,000
	700	390	390	6	6	4,700	13,400	480,000	1,370,000
482.600	615.950	330.200	330.200	6.4	3.3	4,000	13,400	405,000	1,370,000
488.950	660.400	365.125	361.950	6.4	8	5,350	16,100	550,000	1,640,000

❶ Minimum allowable dimension for chamfer dimension r or r_1.

Four Row Tapered Roller Bearings

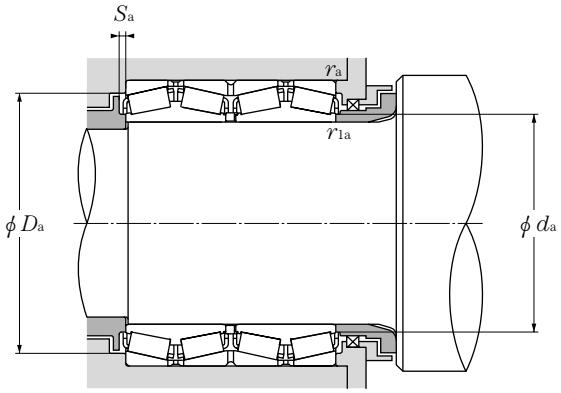

Equivalent bearing load

dynamic

$P_r = XF_r + YF_a$

$\frac{F_a}{F_r} \leqq e$		$\frac{F_a}{F_r} > e$	
X	Y	X	Y
1	Y_1	0.67	Y_2

static

$P_{or} = F_r + Y_o F_a$

For values of e, Y_2 and Y_o see the table below.

Bearing numbers	Abutment and fillet dimensions mm					Constant	Axial load factors			Mass kg
	d_a	D_a	S_a min	r_{as} max	r_{las} max	e	Y_1	Y_2	Y_o	(approx.)
CRO-8103	441	525	6.5	6.4	3.3	0.35	1.95	2.90	1.91	310
＊EE833161D/833232/833233D	448	549	6.5	6.4	3.3	0.33	2.07	3.09	2.03	395
＊EE911603D/912400/912401D	441	568	1.5	6.4	3.5	0.38	1.76	2.62	1.72	332
☆＊M667947D/M667911/M667911DG2	431	510	5.5	6.4	1.5	0.42	1.61	2.40	1.57	226
☆＊T-M268749D/M268710/M268710DG2	444	549	9	6.4	3.3	0.33	2.03	3.02	1.98	421
625984 (CRO-8414)	457	545	7	4	5	0.33	2.03	3.02	1.98	374
CRO-8402	455	593	8	4	4	0.33	2.03	3.02	1.98	600
＊T-LM869449D/LM869410/LM869410D	453	537	8	1.5	2.5	0.55	1.24	1.84	1.21	193
＊LM769349D/LM769310/LM769310D	453	534	6.5	6.4	1.5	0.44	1.52	2.26	1.49	232
☆＊EE931170D/931250/931251XDG2	490	607	6.6	5	5	0.32	2.12	3.15	2.07	402
EE736173D/736238/736239D	464	572	6.5	6.4	3.5	0.35	1.95	2.90	1.91	297
625988 (CRO-8839)	479	572.5	8	5	5	0.33	2.03	3.02	1.64	430
☆CRO-8808	494	607	9	5	5	0.33	2.03	3.02	1.98	498
☆CRO-8807	484	607	9	6	3	0.33	2.03	3.02	1.98	400
CRO-8806	483	595	11	5	5	0.33	2.03	3.02	1.98	600
☆＊M270749D/M270710/M270710DG2	478	591	8	6.4	3.3	0.33	2.03	3.02	1.98	509
＊L770849D/L770810/L770810D	478	567	5.5	3.3	1.5	0.47	1.43	2.12	1.39	201
＊EE244181D/244235/244236D	490	583	5.5	2.5	3	0.40	1.67	2.49	1.63	207
＊EE737179D/737260/737260D	495	616	6.5	6.4	3.3	0.37	1.80	2.69	1.76	379
625992A	499	598.5	7	5	5	0.33	2.03	3.02	1.98	493
CRO-9501	506	614	10	4	2.5	0.34	1.98	2.94	1.93	465
625996	525	623	7	5	5	0.33	2.03	3.02	1.98	563
CRO-9612	524	650	2	5	5	0.33	2.03	3.02	1.98	554
CRO-9602	517	645	8	5	5	0.4	1.68	2.50	1.64	436
☆＊LM272249D/LM272210/LM272210DG2	504	585	6.5	6.4	3.3	0.33	2.03	3.02	1.98	250
☆＊T-EE640193D/640260/640261DG2	519	624	9	6	5	0.31	2.20	3.27	2.15	364

Remarks: 1. Bearing numbers marked "＊" designate inch system bearings. 2. Bearing numbers marked "☆" designate bearing with hollow rollers and pin type cages.
3. The bearing where parentheses adhered abolished inner ring spacer.

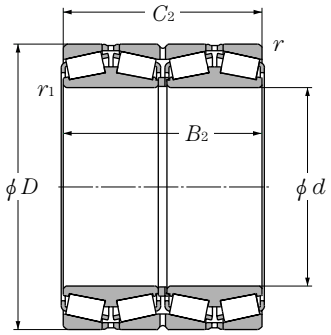

d 489.026～585.788mm

Boundary dimensions mm						Basic load ratings dynamic kN	static kN	dynamic kgf	static kgf
d	D	B_2	C_2	$r_{s\,min}$ ❶	$r_{ls\,min}$ ❶	C_r	C_{or}	C_r	C_{or}
489.026	634.873	320.675	320.675	3.3	3.3	3,650	12,000	370,000	1,220,000
500	670	515	515	5	1.5	6,900	24,600	700,000	2,510,000
	690	480	480	5	5	6,000	19,900	610,000	2,020,000
	705	515	515	6	6	8,450	27,100	860,000	2,760,000
	730	420	420	6	6	7,450	19,900	760,000	2,030,000
	730	440	440	6	6	7,200	20,600	735,000	2,100,000
501.650	711.200	520.700	520.700	6.4	3.3	8,650	27,300	885,000	2,790,000
508.000	762.000	463.550	463.550	6.4	6.4	7,800	21,400	795,000	2,180,000
509.948	654.924	377.000	379.000	6.4	1.5	5,100	17,600	520,000	1,790,000
514.350	673.100	422.275	422.275	6.4	3.3	5,950	20,500	605,000	2,090,000
519.112	736.600	536.575	536.575	6.4	3.3	9,100	28,700	925,000	2,930,000
520	735	535	535	5	7	9,100	28,700	925,000	2,930,000
533.400	965.200	495.300	495.300	7.5	7.5	11,100	28,700	1,130,000	2,920,000
536.575	761.873	558.800	558.800	6.4	3.3	10,100	30,500	1,030,000	3,100,000
539.750	784.225	339.725	342.900	6.4	3.3	4,800	12,200	490,000	1,240,000
555.625	698.500	349.250	349.250	6.4	3.2	4,350	14,300	445,000	1,460,000
558.800	736.600	322.265	322.268	6.4	3.3	4,300	13,500	435,000	1,380,000
	736.600	409.575	409.575	6.4	3.3	6,100	20,500	625,000	2,090,000
570	780	515	515	6	6	9,200	31,000	935,000	3,150,000
	810	590	590	6	6	11,000	35,500	1,120,000	3,600,000
571.500	812.800	593.725	593.725	6.4	3.3	11,900	36,500	1,220,000	3,750,000
584.200	762.000	396.875	401.638	6.4	3.3	6,550	22,300	670,000	2,280,000
585.788	771.525	479.425	479.425	6.4	3.3	8,550	29,000	875,000	2,960,000

❶ Minimum allowable dimension for chamfer dimension r or r_1.

Four Row Tapered Roller Bearings

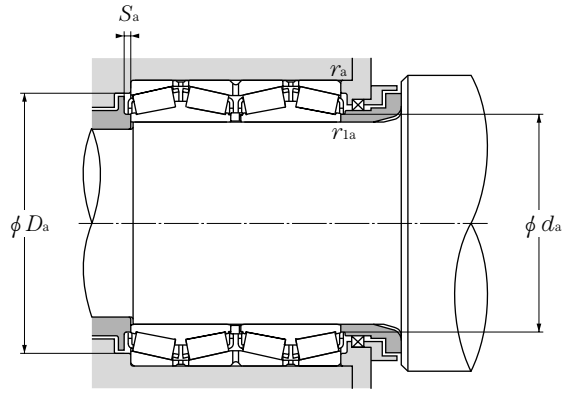

Equivalent bearing load

dynamic

$P_r = XF_r + YF_a$

$\frac{F_a}{F_r} \leqq e$		$\frac{F_a}{F_r} > e$	
X	Y	X	Y
1	Y_1	0.67	Y_2

static

$P_{or} = F_r + Y_o F_a$

For values of e, Y_2 and Y_o see the table below.

Bearing numbers	Abutment and fillet dimensions mm					Constant	Axial load factors			Mass kg
	d_a	D_a	S_a min	r_{as} max	r_{las} max	e	Y_1	Y_2	Y_o	(approx.)
＊LM772749D/LM772710/LM772710DA	513	600	6.5	2.5	2.5	0.47	1.43	2.12	1.40	268
CRO-10008	520	616	8	4	1.5	0.40	1.68	2.50	1.64	598
CRO-10005	530	640	7	4	4	0.33	2.03	3.02	1.98	600
6259/500	553	649.5	7.5	5	5	0.33	2.03	3.02	1.98	632
☆CRO-10023	554	702	7.5	5	5	0.40	1.68	2.50	1.64	606
☆CRO-10003	550	683	11	5	5	0.33	2.03	3.02	1.98	535
☆＊M274149D/M274110/M274110DG2	534	663	9.5	6.4	3.3	0.33	2.03	3.02	1.98	726
☆＊EE531201D/531300/531301XDG2	549	711	9.5	5	5	0.38	1.77	2.64	1.73	740
☆CRO-10208 (CRO-10214)	533.5	527	5	5	5	0.41	1.65	2.46	1.61	320
＊LM274449D/LM274410/LM274410D	540	648	8	6.4	3.3	0.33	2.03	3.02	1.98	390
☆＊M275349D/M275310/M275310DG2 (CRO-10408)	552	684	9.5	6.4	3.3	0.33	2.03	3.02	1.98	761
☆CRO-10402	558	688	11	4	6	0.33	2.03	3.02	1.98	750
☆CRO-10702	680	929.2	7.5	6	6	0.32	2.12	3.15	2.07	1,662
☆＊M276449D/M276410/M276410DG2	564	711	9.5	6.4	3.3	0.33	2.03	3.02	1.98	890
＊EE522126D/523087/523088D	575	733	6.5	6.4	3.3	0.48	1.41	2.10	1.38	552
CRO-11101 (CRO-11103)	579	670.5	6.5	5	5	0.33	2.03	3.02	1.98	298
＊EE843221D/843290/843291D (CRO-11217)	585	699	8.5	6.4	3.3	0.34	1.98	2.94	1.93	388
☆＊LM377449D/LM377410/LM377410DG2 (CRO-11216)	588	696	8	6.4	3.3	0.35	1.95	2.90	1.90	502
☆CRO-11402	609	733	7.5	5	5	0.33	2.03	3.02	1.98	625
☆CRO-11403	620	760	10	5	5	0.33	2.03	3.02	1.98	845
☆＊M278749D/M278710/M278710DAG2	609	756	11	6.4	3.3	0.33	2.03	3.02	1.98	1,080
☆＊LM778549D/LM778510/LM778510DG2	615	717	7	6.4	3.3	0.47	1.43	2.14	1.40	511
＊LM278849D/LM278810/LM278810D	615	726	10	6.4	3.3	0.35	1.95	2.90	1.91	750

Remarks: 1. Bearing numbers marked "＊" designate inch system bearings. 2. Bearing numbers marked "☆" designate bearing with hollow rollers and pin type cages.
3. The bearing where parentheses adhered abolished inner ring spacer.

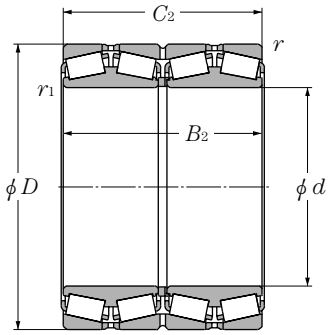

d 585.788～730mm

Boundary dimensions mm						Basic load ratings dynamic kN	static kN	dynamic kgf	static kgf
d	D	B_2	C_2	$r_{s\,min}$ ❶	$r_{ls\,min}$ ❶	C_r	C_{or}	C_r	C_{or}
585.788	771.525	479.425	479.425	6.4	3.3	7,350	25,700	750,000	2,620,000
595.312	844.550	615.950	615.950	6.4	3.3	12,300	39,000	1,250,000	4,000,000
	844.550	615.950	615.950	6.4	3.3	12,600	40,500	1,290,000	4,100,000
609.600	787.400	361.950	361.950	6.4	3.3	6,450	20,300	655,000	2,070,000
	863.600	660.400	660.400	6.4	3.3	13,500	42,000	1,380,000	4,300,000
611.500	832.800	593.725	593.725	6.4	3.3	11,500	37,500	1,170,000	3,850,000
630	920	600	600	7.5	7.8	13,100	39,000	1,340,000	3,950,000
650	1,030	560	560	7.5	12	13,500	35,000	1,380,000	3,550,000
657.225	933.450	676.275	676.275	6.4	3.3	15,300	48,000	1,560,000	4,900,000
660	1,070	642	642	7.5	7.5	15,400	43,500	1,570,000	4,450,000
660.400	812.800	365.125	365.125	6.4	3.3	6,200	23,200	630,000	2,360,000
670	960	700	700	7.5	7.5	16,700	51,500	1,700,000	5,300,000
	1,090	710	710	7.5	7.5	19,100	50,000	1,950,000	5,100,000
	1,090	710	710	7.5	7.5	17,400	47,500	1,780,000	4,850,000
679.450	901.700	552.450	552.450	6.4	3.3	11,200	38,000	1,140,000	3,900,000
680	870	460	460	6	3	7,500	27,400	765,000	2,790,000
682.625	965.200	701.675	701.675	6.4	3.3	16,100	50,500	1,640,000	5,150,000
685.800	876.300	352.425	355.600	6.4	3.3	6,050	21,800	615,000	2,220,000
710	900	410	410	5	2.5	7,650	26,900	780,000	2,740,000
711.200	914.400	317.500	317.500	6.4	3.3	5,350	17,900	545,000	1,820,000
	914.400	317.500	317.500	6.4	16	5,350	17,900	545,000	1,820,000
730	1,070	642	642	7.5	7.5	15,400	46,500	1,570,000	4,750,000

❶ Minimum allowable dimension for chamfer dimension r or r_1.

Four Row Tapered Roller Bearings

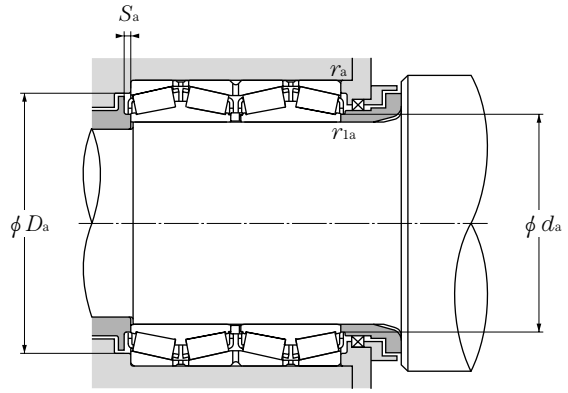

Equivalent bearing load

dynamic

$P_r = XF_r + YF_a$

$\frac{F_a}{F_r} \leqq e$		$\frac{F_a}{F_r} > e$	
X	Y	X	Y
1	Y_1	0.67	Y_2

static

$P_{or} = F_r + Y_o F_a$

For values of e, Y_2 and Y_o see the table below.

Bearing numbers	Abutment and fillet dimensions mm					Constant	Axial load factors			Mass kg
	d_a	D_a	S_a min	r_{as} max	r_{las} max	e	Y_1	Y_2	Y_o	(approx.)
☆CRO-11701	628	718	9.5	6.4	3.3	0.35	1.95	2.90	1.91	610
☆CRO-11913	654	781	7	6.4	3.3	0.33	2.03	3.02	1.98	1,135
☆＊M280049D/M280010/M280010DG2	633	786	11	6.4	3.3	0.33	2.03	3.02	1.98	1,160
☆＊EE649241D/649310/649311DG2	636	747	9.5	6.4	3.3	0.33	2.03	3.02	1.98	458
☆＊M280349D/M280310/M280310DG2	659	796	13.5	6.4	3.3	0.33	2.03	3.02	1.98	1,250
☆CRO-12202	660	776	11.5	6.4	3.3	0.33	2.03	3.02	1.98	960
☆CRO-12604	702	848	7.5	6	6	0.33	2.03	3.02	1.98	1,390
☆CRO-13001	765	947	8.5	6	10	0.32	2.12	3.15	2.07	1,760
☆＊M281649D/M281610/M281610DG2	699	870	11	6.4	3.3	0.33	2.03	3.02	1.98	1,630
☆CRO-13202	760	991	9	6	6	0.32	2.12	3.15	2.07	1,950
☆＊L281149D/L281110/L281110DG2	682.8	777	9	6.4	3.3	0.33	2.03	3.02	1.98	448
☆CRO-13401	719	901	8	6	6	0.33	2.03	3.02	1.98	1,600
☆CRO-13404	782	997	13.5	6	6	0.29	2.32	3.45	2.26	2,690
☆CRO-13402	799	995	13.5	6	6	0.32	2.12	3.15	2.07	2,600
☆＊LM281849D/LM281810/LM281810DG2	714	852	11	6.4	3.3	0.33	2.03	3.02	1.98	1,040
CRO-13602	713	824	8	5	2.5	0.43	1.57	2.34	1.53	582
☆M282249D/M282210/M282210DG2	723	900	13	6.4	3.3	0.33	2.03	3.02	1.98	1,770
☆＊EE655271D/655345/655346DG2 (CRO-13708)	717	831	8	6.4	3.3	0.42	1.61	2.40	1.57	539
☆CRO-14208	745	850	10	4	2	0.33	2.03	3.02	1.98	620
☆＊EE755281D/755360/755361DG2	744	873	9.5	2.5	5	0.38	1.77	2.64	1.73	527
☆＊EE755280D/755360/755361DG2	762	873	8	6.4	3.3	0.38	1.77	2.64	1.73	527
☆CRO-14601	780	1,020	7	6	6	0.33	2.03	3.02	1.98	1,900

Remarks: 1. Bearing numbers marked "＊" designate inch system bearings. 2. Bearing numbers marked "☆" designate bearing with hollow rollers and pin type cages.
3. The bearing where parentheses adhered abolished inner ring spacer.

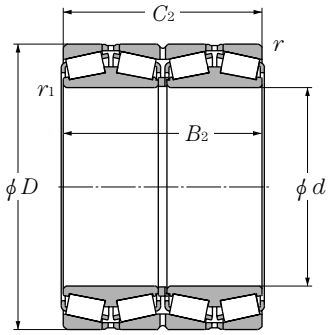

d 730.250～1,200.150mm

Boundary dimensions mm						Basic load ratings dynamic kN	static kN	dynamic kgf	static kgf
d	D	B_2	C_2	$r_{s\,min}$ ❶	$r_{ls\,min}$ ❶	C_r	C_{or}	C_r	C_{or}
730.250	1,035.050	755.650	755.650	6.4	3.3	18,100	59,500	1,850,000	6,050,000
749.300	990.600	605.000	605.000	6.4	3.3	12,600	45,500	1,290,000	4,650,000
762.000	1,066.800 1,079.500	723.900 787.400	736.600 787.400	12.7 12.7	4.3 4.8	17,700 19,200	58,500 65,000	1,800,000 1,960,000	5,950,000 6,600,000
800	1,120	820	820	7.5	7	21,000	72,500	2,140,000	7,400,000
825.500	1,168.400	844.550	844.550	12.7	4.8	22,300	76,500	2,270,000	7,800,000
840	1,170	840	840	6	6	21,900	76,500	2,230,000	7,800,000
863.600	1,130.300 1,219.200	669.925 876.300	669.925 889.000	12.7 12.7	4.8 4.8	15,800 24,100	59,500 83,000	1,610,000 2,450,000	6,050,000 8,450,000
938.212	1,270.000	825.500	825.500	12.7	4.8	22,500	80,000	2,300,000	8,150,000
950	1,360	880	880	7.5	4	27,000	89,000	2,750,000	9,050,000
1,200.150	1,593.850	990.600	990.600	12.7	4.8	33,500	132,000	3,400,000	13,500,000

❶ Minimum allowable dimension for chamfer dimension r or r_1.

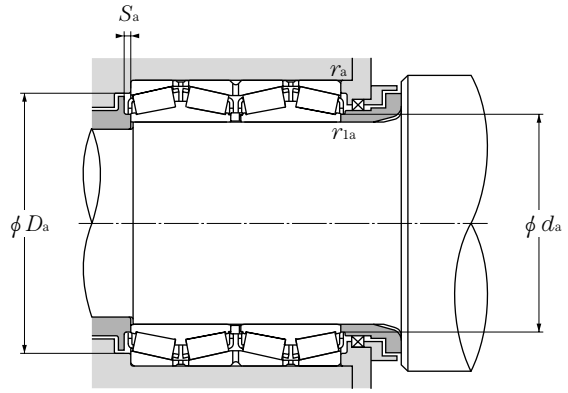

Equivalent bearing load

dynamic

$P_r = XF_r + YF_a$

$\frac{F_a}{F_r} \leqq e$		$\frac{F_a}{F_r} > e$	
X	Y	X	Y
1	Y_1	0.67	Y_2

static

$P_{or} = F_r + Y_o F_a$

For values of e, Y_2 and Y_o see the table below.

Bearing numbers	Abutment and fillet dimensions (mm)					Constant	Axial load factors			Mass (kg)
	d_a	D_a	S_a min	r_{as} max	r_{las} max	e	Y_1	Y_2	Y_o	(approx.)
☆＊M283449D/M283410/M283410D	774	966	13	6.4	3.3	0.33	2.03	3.02	1.98	2,210
☆＊LM283649D/LM283610/LM283610DG2	786	936	10.5	6.4	3.3	0.33	2.03	3.02	1.98	1,250
☆＊M284148D/M284111/M284110DG2	840	985	3.5	12.7	4.3	0.33	2.03	3.02	1.98	2,220
☆＊M284249D/M284210/M284210DG2	810	1,005	13	12.7	4.8	0.33	2.03	3.02	1.98	2,480
☆CRO-16001	858	1,052	10	6	6	0.33	2.03	3.02	1.98	3,960
☆＊M285848D/M285810/M285810DG2	879	1,085	13	12.7	4.8	0.33	2.03	3.02	1.98	3,010
☆CRO-16803	897	1,099	12	5	5	0.33	2.03	3.02	1.98	3,970
☆＊LM286249D/LM286210/LM286210DG2	906	1,065	11	12.7	4.8	0.33	2.03	3.02	1.98	1,950
☆＊EE547341D/547480/547481DG2 (CRO-17301)	918	1,135	6.5	12.7	4.8	0.33	2.03	3.02	1.98	3,640
☆＊LM287649D/LM287610/LM287610DG2	990	1,190	10	12.7	4.8	0.33	2.03	3.02	1.98	4,100
☆CRO-19001	1,030	1,278	12	6	3	0.35	1.95	2.90	1.91	4,100
☆＊LM288949D/LM288910/LM288910DG2	1,260	1,500	13	12.7	4.8	0.33	2.03	3.02	1.98	6,130

Remarks: 1. Bearing numbers marked "＊" designate inch system bearings. 2. Bearing numbers marked "☆" designate bearing with hollow rollers and pin type cages.
3. The bearing where parentheses adhered abolished inner ring spacer.

Sealed Four Row Tapered Roller Bearings

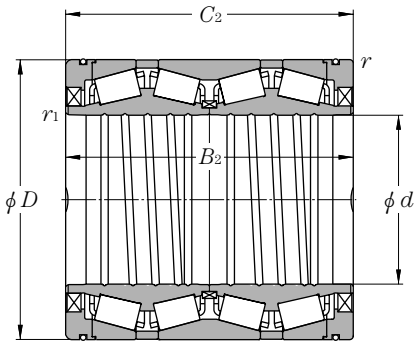

d 140～711.200mm

Boundary dimensions mm						Basic load ratings dynamic kN	static kN	dynamic kgf	static kgf	Bearing numbers
d	D	B_2	C_2	$r_{s\,min}$ ❶	$r_{ls\,min}$ ❶	C_r	C_{or}	C_r	C_{or}	
140	198	174	174	2	1.5	595	1,470	60,500	150,000	**CRO-2810LL**
	198	174	174	2	1.5	615	1,510	63,000	154,000	**CRO-2812LL**
200	282	206	206	2.5	2.5	950	2,450	97,000	250,000	**CRO-4022LL**
216.103	330.2	263.525	269.875	3.3	1.5	1,770	4,000	180,000	405,000	＊**CRO-4303LL**
220	295	315	315	2.5	1	1,270	3,850	130,000	395,000	**CRO-4424LL**
	310	280	280	2.5	1	1,590	4,100	162,000	420,000	**CRO-4427LL**
	320	290	290	3	2.7	1,780	4,850	181,000	495,000	**CRO-4436LL**
240	338	248	248	3	3	1,590	4,200	162,000	430,000	**CRO-4811LL**
	338	340	340	2.5	1	2,040	6,000	208,000	610,000	**CRO-4817LL**
245	345	310	310	3	1	2,070	5,950	211,000	610,000	**CRO-4906LL**
250	365	270	270	3	2.5	1,920	4,750	196,000	485,000	**CRO-5015LL**
254	358.775	269.875	269.875	3.3	1.5	1,940	4,900	198,000	500,000	＊**CRO-5117LL**
	358.775	269.875	269.875	3.3	3.3	1,850	4,750	188,000	485,000	＊**CRO-5116LL**
260	365	339	339	4	1	2,250	5,950	229,000	610,000	**CRO-5224LL**
260.35	422.275	314.325	317.5	3.3	4.8	2,680	5,950	274,000	606,000	＊**CRO-5227LL**
279.4	393.7	269.875	269.875	6.4	1.5	2,000	4,950	204,000	505,000	＊**CRO-5652LL**
280	380	290	290	3	1	2,060	5,750	210,000	585,000	**CRO-5660LL**
	395	290	290	4	1.5	2,120	5,450	216,000	560,000	**CRO-5665LL**
	395	340	340	2.5	3.2	2,590	7,150	264,000	730,000	**CRO-5664LL**
	410	268	268	6.4	2.2	2,140	5,000	219,000	505,000	**CRO-5639LL**
285	400	340	340	4	1	2,560	7,650	261,000	780,000	**CRO-5709LL**
290	400	346	346	4	3.1	2,560	7,650	261,000	780,000	**CRO-5814LL**
300	400	254	254	4	5	1,920	5,300	196,000	540,000	**CRO-6038LL**
	420	310	310	4	3.2	2,510	6,850	256,000	695,000	**CRO-6042LL**
	430	295	305	5	1	2,150	5,550	219,000	565,000	**CRO-6031LL**
304.648	438.048	280.99	279.4	3.7	2.8	2,250	5,450	229,000	555,000	＊**CRO-6143LL**
310	430	310	310	4	1.5	2,340	6,600	239,000	670,000	**CRO-6220LL**
	430	350	350	2.5	3.2	2,820	7,950	288,000	815,000	**CRO-6222LL**
320	480	360	360	4	2	3,600	8,850	370,000	900,000	**CRO-6426LL**
343.052	457.098	254	254	3.3	1.5	2,060	5,500	210,000	560,000	＊**CRO-6930LL**
	457.098	254	254	3.3	0.6	1,900	5,050	194,000	515,000	＊**CRO-6920LL**
	457.098	299	299	3.3	1.5	2,470	7,100	252,000	725,000	＊**CRO-6936LL**
355	490	316	316	4	2.3	2,520	6,600	257,000	675,000	**CRO-7109LL**
360	480	375	375	3	2.8	3,400	10,200	345,000	1,040,000	**CRO-7226LL**
410	546	400	400	5	1.5	3,850	11,900	390,000	1,210,000	**CRO-8204LL**
420	620	395	320	6	6	4,550	11,800	465,000	1,200,000	**CRO-8412LL**
440	590	480	480	6	1.5	4,550	13,900	465,000	1,420,000	**CRO-8830LL**
	620	454	454	6	1.5	5,800	16,600	595,000	1,700,000	**CRO-8832LL**
457.2	596.9	276.225	279.4	3.3	1.5	2,540	6,800	259,000	695,000	＊**CRO-9107LL**
479.425	679.45	495.3	495.3	6.4	0.6	6,450	18,400	660,000	1,870,000	＊**CRO-9610LL**
482.6	615.95	330.2	330.2	6.4	3.3	3,200	9,650	330,000	985,000	＊**CRO-9725LL**
530	715	590	590	6	4	8,200	26,900	835,000	2,740,000	**CRO-10607LL**
595.312	844.55	615.95	615.95	6.4	3.0	10,600	32,000	1,080,000	3,250,000	＊**CRO-11919LL**
711.2	914.4	387.35	387.35	6.4	3.3	6,300	19,600	645,000	2,000,000	＊**CRO-14214LL**
	914.4	410	410	5	2.5	6,400	20,700	655,000	2,110,000	＊**CRO-14209LL**

❶ Minimum allowable dimension for chamfer dimension r or r_1.
Remarks: 1. The marked "＊" bearings are inch system sizes.

Constant	Axial load factors			Mass
				kg
e	Y_1	Y_2	Y_o	(approx.)
0.40	1.68	2.50	1.64	16
0.47	1.43	2.12	1.40	15.5
0.33	2.03	3.02	1.98	39
0.55	1.23	1.82	1.20	78.2
0.37	1.80	2.69	1.76	57.5
0.33	2.03	3.02	1.98	63.5
0.39	1.74	2.59	1.70	77
0.43	1.57	2.34	1.53	67.8
0.40	1.68	2.50	1.64	94.4
0.40	1.68	2.50	1.64	90.5
0.40	1.68	2.50	1.64	90
0.40	1.68	2.50	1.64	83
0.55	1.24	1.84	1.21	81.7
0.40	1.68	2.50	1.64	103
0.55	1.24	1.84	1.21	177
0.47	1.43	2.12	1.40	96.4
0.33	2.03	3.02	1.98	90
0.33	2.07	3.09	2.03	108
0.40	1.68	2.50	1.64	126
0.33	2.07	3.09	2.03	116
0.40	1.68	2.50	1.64	134
0.40	1.68	2.50	1.64	129
0.28	2.43	3.61	2.37	84.6
0.40	1.68	2.50	1.64	128
0.33	2.03	3.02	1.98	136
0.47	1.43	2.12	1.40	136
0.40	1.68	2.50	1.64	133
0.40	1.68	2.50	1.64	150
0.47	1.43	2.12	1.40	228
0.47	1.43	2.12	1.40	105
0.33	2.03	3.02	1.98	107
0.43	1.57	2.34	1.53	130
0.33	2.03	3.02	1.98	159
0.33	2.03	3.02	1.98	180
0.33	2.03	3.02	1.98	253
0.37	1.80	2.69	1.76	384
0.33	2.03	3.02	1.98	358
0.33	2.03	3.02	1.98	426
0.47	1.43	2.12	1.40	192
0.33	2.03	3.02	1.98	565
0.33	2.03	3.02	1.98	225
0.32	2.12	3.15	2.07	700
0.33	2.03	3.02	1.98	1130
0.38	1.78	2.65	1.74	616
0.38	1.77	2.64	1.73	596

Spherical Roller bearings

1. Type, Structure and Characteristics

The barrel shaped spherical rolling elements of a self-aligning bearing track along two rows of raceway grooves in the inner ring. The center of the outer ring's raceway aligns with the center of the bearing. The self-aligning feature accommodates errors in housing assembly and misalignments between the inner and outer rings caused by bent shafts. The bearings have a large load capacity and are suitable for applications with vibration and impact loads.

In addition to a cylindrical shaft bore, the bearings are available with a tapered shaft bore. The tapered bore bearings can be shaft mounted using an adapter or removable sleeves. **Table 1** shows the types of the self-aligning roller bearings. Please consult with **NTN** Engineering for the special product (do part number starts with 2p)

Table 1 Model of Self-Aligning Roller Bearings

Model	Standard (Model B)	Model C	Model 213
Structure	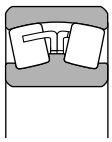	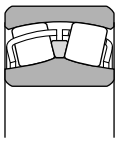	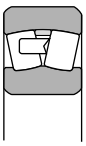
Bearing Series	Bearings except Model C	24024～24038	213's bore should be more than 55mm.
Roller	A symmetrical roller	Symmetrical roller	A symmetrical roller
Roller guide type	Guided by the inner rib which is united with the inner ring.	By the guide ring located between two rows of rollers.	By the guide ring located between the rollers on the outer ring raceway.
Cage type	Pressed cage Machined cage	Pressed cage	Machined cage

1.2 Lubrication holes and grooves

Holes and grooves to supply lubricant are provided on self-aligning roller bearings with outside diameters greater than 320mm. If required, lubrication holes and grooves can be manufactured for bearings with ODs smaller than 320mm. Consult **NTN** Engineering for further details and add the supplemental code D1 to the part number. **Table 2** shows the dimensions for lubrication holes and grooves. The number of lubrication holes are shown in **Table 3**.

When a knock pin for lubricant retention is necessary, please contact **NTN** Engineering.

Table 2 Lubrication hole and groove dimensions

Unit mm

Nominal bearing width over	Nominal bearing width incl	Oil groove width W_o	Oil hole dia d_o	Oil groove depth h Width series 1, 2, 3	Oil groove depth h Width series 4
80	100	14	8	2.5	2.0
100	120	16	10	3.0	2.5
120	160	20	12	3.5	3.0
160	200	27	16	5.0	3.5
200	315	33	20	6.0	5.0
315	—	42	25	7.0	6.5

Table 3 Lubrication hole number

Nominal bearing outside dia. mm over	Nominal bearing outside dia. mm incl	Hole number Z_o
—	320	4
320	1,010	8
1,010	—	12

2. Dimensional Accuracy/Rotation Accuracy

Refer to Table 3.3 (Page A-12)

3. Recommended Fitting

Refer to Table 4.2 (Page A-24)

4. Bearing Internal Clearance

Refer to Table 5.10 (Page A-36)

5. Allowable aligning angle

These bearings have a self-aligning function, and their allowable aligning angle varies depending on the dimension series and load conditions, but are mostly described as follows.

Normal load (Equivalent load to 0.09 C_r) ··· 0.009rad (0.5°)
Light load ····· 0.035rad (2°)

6. Assembly of Tapered Hole Roller Bearings

Tapered hole spherical roller bearings use the measurement method as shown in **Fig.1**. A suitable tightening rate can be achieved by pushing the bearing toward the axial direction until it reaches the reduction rate of the radial internal clearance or pushing rate of axial direction. When heavy and high speed loads are applied, or when it is necessary to keep a higher tightening rate as the temperature difference between the inner and outer rings rises, be sure to have the maximum reduction rate of radial internal clearance or the pushing rate of the axial direction, as shown in **Table 4**, by using a bearing with a radial internal clearance of more than C3. The clearance after mounting in this case should be larger than the minimum clearance after mounting as shown in **Table 4**.

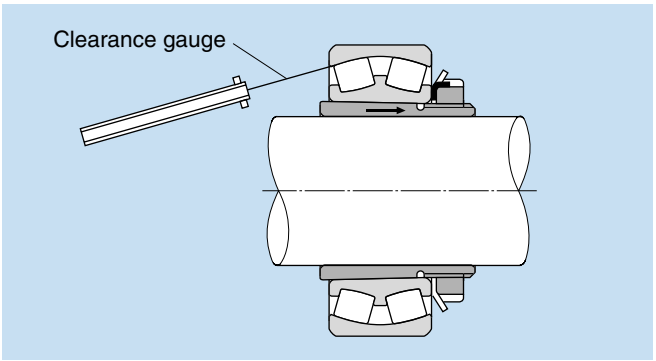

Fig.1 Measurement method of spherical roller bearing internal clearance

Table 4 Assembly of tapered hole spherical roller bearings

Unit:mm

Nominal bearing bore d		Reduction rate of radial internal clearance		Pushing rate of axial direction				Minimum residual internal clearance		
				taper 1/12		taper 1/30				
over	incl	min	max	min	max	min	max	CN	C3	C4
80	100	0.045	0.055	0.7	0.8	1.75	2.25	0.035	0.05	0.08
100	120	0.05	0.06	0.75	0.9	1.9	2.25	0.05	0.065	0.1
120	140	0.065	0.075	1.1	1.2	2.75	3	0.055	0.08	0.11
140	160	0.075	0.09	1.2	1.4	3	3.75	0.055	0.09	0.13
160	180	0.08	0.1	1.3	1.6	3.25	4	0.06	0.1	0.15
180	200	0.09	0.11	1.4	1.7	3.5	4.25	0.07	0.1	0.16
200	225	0.1	0.12	1.6	1.9	4	4.75	0.08	0.12	0.18
225	250	0.11	0.13	1.7	2	4.25	5	0.09	0.13	0.2
250	280	0.12	0.15	1.9	2.4	4.75	6	0.1	0.14	0.22
280	315	0.13	0.16	2	2.5	5	6.25	0.11	0.15	0.24
315	355	0.15	0.18	2.4	2.8	6	7	0.12	0.17	0.26
355	400	0.17	0.21	2.6	3.3	6.5	8.25	0.13	0.19	0.29
400	450	0.2	0.24	3.1	3.7	7.75	9.25	0.13	0.2	0.31
450	500	0.21	0.26	3.3	4	8.25	10	0.16	0.23	0.35
500	560	0.24	0.3	3.7	4.6	9.25	11.5	0.17	0.25	0.36
560	630	0.26	0.33	4	5.1	10	12.5	0.2	0.29	0.41
630	710	0.3	0.37	4.6	5.7	11.5	14.5	0.21	0.31	0.45
710	800	0.34	0.43	5.3	6.7	13.3	16.5	0.23	0.35	0.51
800	900	0.37	0.47	5.7	7.3	14.3	18.5	0.27	0.39	0.57
900	1,000	0.41	0.53	6.3	8.2	15.8	20.5	0.3	0.43	0.64
1,000	1,120	0.45	0.58	6.8	8.7	17	22.5	0.32	0.48	0.7
1,120	1,250	0.49	0.63	7.4	9.4	18.5	24.5	0.34	0.54	0.77

7. General Operating Cautions

Pressed cages or machined cages are standard depending on the bearing type and dimensions. However, a standard cage may not be used under high speed specifications or in conditions under severe vibration or impact.

When bearings are operated under small loads (about $F_r \leqq 0.04C_{or}$), or under axial loads only, prevent rolling elements from smearing by operating in conditions where $F_a/F_r \leqq 2e$. (Refer to the dimension table for the value of "e.") This is most apparent when using large size spherical roller bearings due to the large roller and cage mass. Please consult **NTN** Engineering for further details.

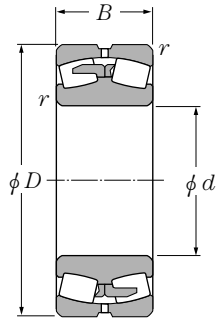

Cylindrical bore

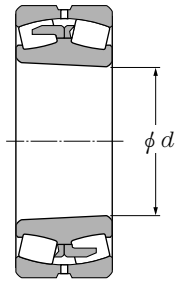

Tapered bore
taper 1:12

d 100～140mm

Boundary dimensions mm				Basic load ratings dynamic kN	static kN	dynamic kgf	static kgf	Bearing numbers		Abutment and fillet dimensions mm		
d	D	B	$r_{s\,min}$ ❶	C_r	C_{or}	C_r	C_{or}	Cylindrical bore	tapered ❷ bore	d_a min	D_a max	r_{as} max
100	165	52	2	310	470	31,500	47,500	**23120B**	**23120BK**	110	155	2
	170	65	2	380	590	38,500	60,000	**2P2009**	**2P2009K**	110	160	2
	170	65	2	405	640	41,500	65,500	**☆2P2014**	**2P2014K**	110	160	2
	180	46	2.1	315	415	32,000	42,500	**22220B**	**22220BK**	112	168	2
	180	60.3	2.1	405	580	41,500	59,000	**23220B**	**23220BK**	112	168	2
	215	47	3	370	465	37,500	47,500	**21320**	**21320K**	114	201	2.5
	215	73	3	605	755	61,500	77,000	**22320B**	**22320BK**	114	201	2.5
110	170	45	2	282	455	28,800	46,500	**23022B**	**23022BK**	120	160	2
	180	56	2	370	580	37,500	59,500	**23122B**	**23122BK**	120	170	2
	180	69	2	450	755	46,000	77,000	**24122B**	**24122BK30**	120	170	2
	200	53	2.1	410	570	42,000	58,000	**22222B**	**22222BK**	122	188	2
	200	69.8	2.1	515	760	52,500	77,500	**23222B**	**23222BK**	122	188	2
	240	50	3	495	615	50,500	62,500	**21322**	**21322K**	124	226	2.5
	240	80	3	745	930	76,000	95,000	**22322B**	**22322BK**	124	226	2.5
120	180	46	2	296	495	30,000	50,500	**23024B**	**23024BK**	130	170	2
	180	60	2	390	670	39,500	68,500	**24024B**	**24024BK30**	130	170	2
	180	60	2	395	695	40,000	71,000	**☆24024C**	**24024CK30**	130	170	2
	180	69	2	415	785	42,500	80,000	**☆2P2416**	**2P2416K**	130	170	2
	200	62	2	455	705	46,500	71,500	**23124B**	**23124BK**	130	190	2
	200	80	2	575	945	58,500	96,500	**24124B**	**24124BK30**	130	190	2
	215	58	2.1	485	700	49,500	71,500	**22224B**	**22224BK**	132	203	2
	215	76	2.1	585	880	59,500	89,500	**23224B**	**23224BK**	132	203	2
	260	86	3	880	1,120	89,500	114,000	**22324B**	**22324BK**	134	246	2.5
130	200	52	2	375	620	38,500	63,500	**23026B**	**23026BK**	140	190	2
	200	69	2	505	895	51,500	91,000	**24026B**	**24026BK30**	140	190	2
	200	69	2	490	860	50,000	87,500	**☆24026C**	**24026CK30**	140	190	2
	210	64	2	495	795	50,500	81,000	**23126B**	**23126BK**	140	200	2
	210	80	2	585	995	60,000	102,000	**24126B**	**24126BK30**	140	200	2
	230	64	3	570	790	58,000	80,500	**22226B**	**22226BK**	144	216	2.5
	230	80	3	685	1,060	70,000	108,000	**23226B**	**23226BK**	144	216	2.5
	280	93	4	1,000	1,290	102,000	131,000	**22326B**	**22326BK**	148	262	3
139.734	218	80	1.1	605	1,050	61,500	106,000	**2P2803**	**2P2803K**	146	211	1
140	210	53	2	405	690	41,000	70,500	**23028B**	**23028BK**	150	200	2
	210	69	2	510	945	52,000	96,500	**24028B**	**24028BK30**	150	200	2

❶ Smallest allowable dimension for chamfer dimension r.
❷ Bearings appended with "**K**" have a tapered bore ratio of 1:12; bearings appended with "**K30**" have a tapered bore ratio of 1:30.
Remarks: 1. Bearing numbers marked "☆" are C type.

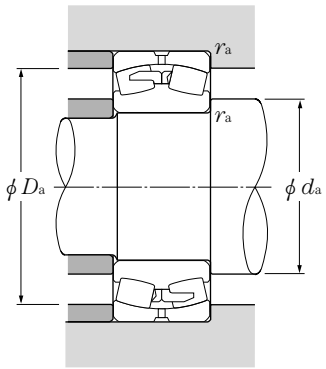

Equivalent bearing load

dynamic

$P_r = XF_r + YF_a$

$\frac{F_a}{F_r} \leqq e$		$\frac{F_a}{F_r} > e$	
X	Y	X	Y
1	Y_1	0.67	Y_2

static

$P_{or} = F_r + Y_o F_a$

For values of e, Y_1, Y_2 and Y_o see the table below.

Constant	Axial load factors			Mass (approx.) kg	
				Cylindrical bore	tapered bore
e	Y_1	Y_2	Y_o		
0.32	2.12	3.15	2.07	4.3	4.16
0.38	1.78	2.65	1.74	5.84	5.62
0.38	1.75	2.61	1.72	5.91	5.69
0.26	2.55	3.80	2.49	4.95	4.84
0.34	1.98	2.94	1.93	6.47	6.28
0.22	3.01	4.48	2.94	8.89	8.78
0.37	1.80	2.69	1.76	12.4	12.1
0.26	2.59	3.85	2.53	3.71	3.58
0.31	2.17	3.24	2.13	5.4	5.22
0.38	1.76	2.63	1.73	7.07	6.96
0.27	2.51	3.74	2.46	7.2	7.04
0.35	1.91	2.84	1.86	9.71	9.43
0.21	3.20	4.77	3.13	11.2	11.1
0.36	1.87	2.79	1.83	17.1	16.7
0.25	2.69	4.01	2.63	4.05	3.9
0.33	2.06	3.07	2.02	5.48	5.39
0.32	2.12	3.15	2.07	5.48	4.91
0.35	1.95	2.90	1.91	5.95	5.65
0.31	2.17	3.24	2.13	7.7	7.46
0.40	1.68	2.50	1.64	10.3	10.1
0.27	2.47	3.68	2.42	9.1	8.89
0.36	1.89	2.82	1.85	12.1	11.7
0.37	1.80	2.69	1.76	21.5	21
0.26	2.63	3.92	2.57	5.9	5.69
0.34	1.98	2.95	1.94	8.08	7.95
0.32	2.12	3.15	2.07	7.91	7.78
0.30	2.23	3.32	2.18	8.47	8.2
0.38	1.78	2.65	1.74	11	10.8
0.28	2.39	3.56	2.33	11.2	10.9
0.35	1.92	2.86	1.88	14.3	13.9
0.37	1.81	2.69	1.77	26.8	26.2
0.35	1.91	2.84	1.86	10.8	10.3
0.25	2.73	4.06	2.67	6.35	6.12
0.32	2.09	3.12	2.05	8.57	8.43

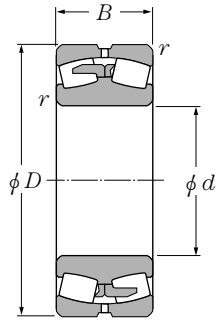

Cylindrical bore

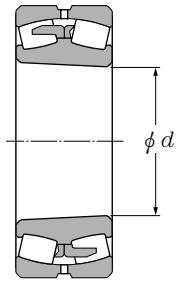

Tapered bore
taper 1:12

d 140～180mm

Boundary dimensions mm				Basic load ratings dynamic kN	static kN	dynamic kgf	static kgf	Bearing numbers Cylindrical bore	Bearing numbers tapered❷ bore	Abutment and fillet dimensions mm		
d	D	B	$r_{s\,min}$❶	C_r	C_{or}	C_r	C_{or}			d_a min	D_a max	r_{as} max
140	210	69	2	520	940	53,000	95,500	☆24028C	24028CK30	150	200	2
	225	68	2.1	540	895	55,000	91,000	23128B	23128BK	152	213	2
	225	85	2.1	670	1,150	68,500	117,000	24128B	24128BK30	152	213	2
	250	68	3	685	975	70,000	99,500	22228B	22228BK	154	236	2.5
	250	88	3	805	1,270	82,000	129,000	23228B	23228BK	154	236	2.5
	300	102	4	1,130	1,460	115,000	149,000	22328B	22328BK	158	282	3
150	225	56	2.1	445	775	45,500	79,000	23030B	23030BK	162	213	2
	225	75	2.1	585	1,060	59,500	108,000	24030B	24030BK30	162	213	2
	225	75	2.1	600	1,090	61,000	111,000	☆24030C	24030CK30	162	213	2
	250	80	2.1	730	1,190	74,500	121,000	23130B	23130BK	162	238	2
	250	100	2.1	885	1,520	90,500	155,000	24130B	24130BK30	162	238	2
	270	73	3	775	1,160	79,000	119,000	22230B	22230BK	164	256	2.5
	270	96	3	935	1,460	95,000	149,000	23230B	23230BK	164	256	2.5
	320	108	4	1,270	1,750	130,000	179,000	22330B	22330BK	168	302	3
160	220	45	2	320	610	33,000	62,500	23932	23932K	170	210	2
	240	60	2.1	505	885	51,500	90,000	23032B	23032BK	172	228	2
	240	80	2.1	650	1,200	66,500	122,000	24032B	24032BK30	172	228	2
	240	80	2.1	665	1,250	67,500	127,000	☆24032C	24032CK30	172	228	2
	270	86	2.1	840	1,370	85,500	140,000	23132B	23132BK	172	258	2
	270	109	2.1	1,040	1,780	106,000	181,000	24132B	24132BK30	172	258	2
	290	80	3	870	1,290	88,500	132,000	22232B	22232BK	174	276	2.5
	290	104	3	1,050	1,660	107,000	170,000	23232B	23232BK	174	276	2.5
	340	114	4	1,410	1,990	144,000	203,000	22332B	22332BK	178	322	3
170	230	45	2	330	650	34,000	66,000	23934	23934K	180	220	2
	260	67	2.1	630	1,080	64,000	110,000	23034B	23034BK	182	248	2
	260	90	2.1	800	1,470	81,500	150,000	24034B	24034BK30	182	248	2
	260	90	2.1	815	1,500	83,000	153,000	☆24034C	24034CK30	182	248	2
	280	88	2.1	885	1,490	90,500	152,000	23134B	23134BK	182	268	2
	280	109	2.1	1,080	1,880	110,000	191,000	24134B	24134BK30	182	268	2
	310	86	4	1,000	1,520	102,000	155,000	22234B	22234BK	188	292	3
	310	110	4	1,180	1,960	120,000	200,000	23234B	23234BK	188	292	3
	360	120	4	1,540	2,180	157,000	223,000	22334B	22334BK	188	342	3
180	250	52	2	440	835	45,000	85,000	23936	23936K	190	240	2
	280	74	2.1	740	1,290	75,500	132,000	23036B	23036BK	192	268	2
	280	100	2.1	965	1,770	98,500	181,000	24036B	24036BK30	192	268	2

❶ Smallest allowable dimension for chamfer dimension r.
❷ Bearings appended with "**K**" have a tapered bore ratio of 1:12; bearings appended with "**K30**" have a tapered bore ratio of 1:30.
Remarks: 1. Bearing numbers marked "☆" are C type.

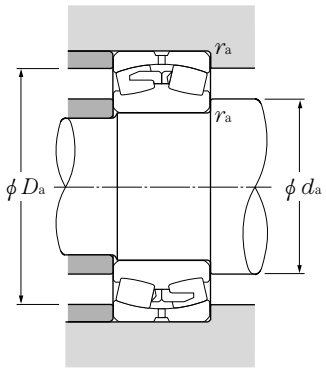

Equivalent bearing load

dynamic

$P_r = XF_r + YF_a$

$\frac{F_a}{F_r} \leqq e$		$\frac{F_a}{F_r} > e$	
X	Y	X	Y
1	Y_1	0.67	Y_2

static

$P_{or} = F_r + Y_o F_a$

For values of e, Y_1, Y_2 and Y_o see the table below.

Constant	Axial load factors			Mass (approx.) kg	
				Cylindrical bore	tapered bore
e	Y_1	Y_2	Y_o		
0.30	2.23	3.32	2.18	8.48	7.66
0.30	2.25	3.35	2.20	10.2	9.86
0.38	1.80	2.68	1.76	13.3	13.1
0.28	2.39	3.55	2.33	14	13.7
0.36	1.90	2.83	1.86	18.8	18.2
0.37	1.80	2.69	1.76	33.8	33
0.24	2.76	4.11	2.70	7.73	7.45
0.33	2.06	3.07	2.02	10.7	10.5
0.30	2.25	3.34	2.20	10.5	10.3
0.32	2.11	3.15	2.06	15.6	15.1
0.40	1.69	2.51	1.65	20.2	20
0.27	2.46	3.66	2.40	18.1	17.7
0.36	1.88	2.79	1.83	24.1	23.4
0.35	1.92	2.86	1.88	42.7	41.8
0.18	3.69	5.49	3.61	5.5	5.33
0.25	2.74	4.09	2.68	9.42	9.09
0.32	2.10	3.13	2.06	13	12.8
0.31	2.18	3.24	2.13	12	11.8
0.32	2.11	3.15	2.07	19.8	19.2
0.40	1.67	2.48	1.63	26	25.6
0.28	2.42	3.60	2.37	22.7	22.2
0.36	1.86	2.77	1.82	30	29.1
0.35	1.94	2.89	1.90	50.8	49.7
0.17	3.91	5.83	3.83	5.8	5.62
0.25	2.66	3.96	2.60	12.7	12.3
0.34	1.98	2.95	1.94	17.7	17.4
0.31	2.16	3.22	2.12	17.4	17.1
0.31	2.15	3.21	2.11	21.5	20.8
0.39	1.74	2.59	1.70	27.2	26.8
0.28	2.39	3.56	2.34	28	27.3
0.36	1.87	2.79	1.83	36.8	35.7
0.34	1.96	2.91	1.91	59.8	58.5
0.19	3.52	5.25	3.45	8.21	7.95
0.26	2.59	3.85	2.53	16.7	16.1
0.35	1.91	2.85	1.87	23.3	22.9

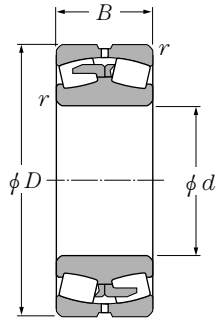

Cylindrical bore

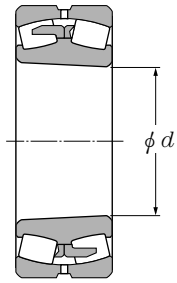

Tapered bore
taper 1:12

d 180～240mm

Boundary dimensions mm				Basic load ratings dynamic kN	static kN	dynamic kgf	static kgf	Bearing numbers Cylindrical bore	Bearing numbers tapered❷ bore	Abutment and fillet dimensions mm		
d	D	B	$r_{s\,min}$❶	C_r	C_{or}	C_r	C_{or}			d_a min	D_a max	r_{as} max
180	280	100	2.1	965	1,770	98,500	181,000	☆24036C	24036CK30	192	268	2
	290	110	2.1	1,050	1,890	107,000	193,000	2P3604	2P3604K	192	278	2
	300	96	3	1,030	1,730	105,000	176,000	23136B	23136BK	194	286	2.5
	300	118	3	1,250	2,210	127,000	225,000	24136B	24136BK30	194	286	2.5
	320	86	4	1,040	1,610	106,000	164,000	22236B	22236BK	198	302	3
	320	112	4	1,230	2,000	125,000	204,000	23236B	23236BK	198	302	3
	380	126	4	1,740	2,560	177,000	261,000	22336B	22336BK	198	362	3
190	260	52	2	460	890	47,000	91,000	23938	23938K	200	250	2
	290	75	2.1	755	1,350	77,000	138,000	23038B	23038BK	202	278	2
	290	100	2.1	995	1,850	102,000	188,000	24038B	24038BK30	202	278	2
	290	100	2.1	970	1,820	98,500	186,000	☆24038C	24038CK30	202	278	2
	320	104	3	1,190	2,020	122,000	206,000	23138B	23138BK	204	306	2.5
	320	128	3	1,420	2,480	144,000	253,000	24138B	24138BK30	204	306	2.5
	340	92	4	1,160	1,810	118,000	185,000	22238B	22238BK	208	322	3
	340	120	4	1,400	2,330	143,000	237,000	23238B	23238BK	208	322	3
	400	132	5	1,870	2,790	191,000	284,000	22338B	22338BK	212	378	4
200	280	60	2.1	545	1,100	56,000	112,000	23940	23940K	212	268	2
	310	82	2.1	915	1,620	93,000	165,000	23040B	23040BK	212	298	2
	310	109	2.1	1,160	2,140	118,000	219,000	24040B	24040BK30	212	298	2
	340	112	3	1,350	2,270	137,000	231,000	23140B	23140BK	214	326	2.5
	340	140	3	1,630	2,900	166,000	295,000	24140B	24140BK30	214	326	2.5
	360	98	4	1,310	2,010	134,000	205,000	22240B	22240BK	218	342	3
	360	128	4	1,610	2,640	165,000	269,000	23240B	23240BK	218	342	3
	420	138	5	2,040	3,050	208,000	310,000	22340B	22340BK	222	398	4
220	300	60	2.1	565	1,170	57,500	119,000	23944	23944K	232	288	2
	340	90	3	1,060	1,920	108,000	195,000	23044B	23044BK	234	326	2.5
	340	118	3	1,350	2,570	138,000	262,000	24044B	24044BK30	234	326	2.5
	370	120	4	1,540	2,670	157,000	272,000	23144B	23144BK	238	352	3
	370	150	4	1,880	3,400	192,000	345,000	24144B	24144BK30	238	352	3
	400	108	4	1,580	2,460	161,000	251,000	22244B	22244BK	238	382	3
	400	144	4	2,010	3,350	205,000	340,000	23244B	23244BK	238	382	3
	400	150	4	2,040	3,400	208,000	345,000	2P4401	2P4401K30	238	382	3
	460	145	5	2,350	3,500	240,000	360,000	22344B	22344BK	242	438	4
240	320	60	2.1	565	1,190	58,000	121,000	23948	23948K	252	308	2
	360	92	3	1,130	2,140	116,000	219,000	23048B	23048BK	254	346	2.5

❶ Smallest allowable dimension for chamfer dimension r.
❷ Bearings appended with "**K**" have a tapered bore ratio of 1:12; bearings appended with "**K30**" have a tapered bore ratio of 1:30.
Remarks: 1. Bearing numbers marked "☆" are C type.

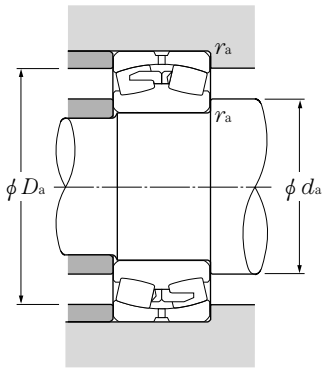

Equivalent bearing load

dynamic

$P_r = XF_r + YF_a$

$\frac{F_a}{F_r} \leqq e$		$\frac{F_a}{F_r} > e$	
X	Y	X	Y
1	Y_1	0.67	Y_2

static

$P_{or} = F_r + Y_o F_a$

For values of e, Y_1, Y_2 and Y_o see the table below.

Constant	Axial load factors			Mass (approx.) kg	
				Cylindrical bore	tapered bore
e	Y_1	Y_2	Y_o		
0.33	2.04	3.04	2.00	23	22.6
0.37	1.82	2.70	1.78	27.5	26.3
0.32	2.11	3.15	2.07	25.1	24.2
0.39	1.72	2.56	1.68	34.3	33.8
0.27	2.49	3.70	2.43	29.3	28.6
0.35	1.91	2.84	1.86	39	37.8
0.34	1.97	2.93	1.92	70	68.5
0.18	3.81	5.67	3.73	8.6	8.34
0.26	2.65	3.94	2.59	17.7	17.1
0.33	2.03	3.02	1.98	24.3	23.9
0.31	2.16	3.22	2.12	23	22.6
0.33	2.07	3.09	2.03	35.3	34.2
0.40	1.69	2.51	1.65	42.8	42.2
0.27	2.47	3.68	2.42	36.6	35.8
0.36	1.89	2.82	1.85	47.6	46.2
0.34	1.97	2.94	1.93	81	79.3
0.17	3.91	5.82	3.82	12.1	11.7
0.26	2.59	3.85	2.53	22.7	21.9
0.35	1.94	2.89	1.90	31	30.5
0.33	2.05	3.05	2.00	43.3	42
0.41	1.64	2.44	1.60	53.4	52.6
0.28	2.45	3.64	2.39	44	43
0.36	1.88	2.79	1.83	57.2	55.5
0.34	1.98	2.95	1.94	93.2	91.2
0.19	3.62	5.39	3.54	13.1	12.7
0.26	2.59	3.85	2.53	29.9	28.8
0.34	1.97	2.94	1.93	40.2	39.6
0.33	2.07	3.09	2.03	53.3	51.6
0.41	1.66	2.47	1.62	67	66
0.27	2.46	3.66	2.40	60.4	59.1
0.36	1.85	2.76	1.81	80	77.6
0.41	1.64	2.44	1.61	81.9	80.8
0.33	2.06	3.07	2.02	117	115
0.16	4.13	6.15	4.04	14	13.6
0.25	2.69	4.01	2.63	33.4	32.2

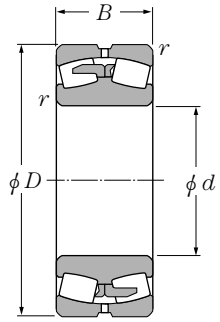

Cylindrical bore

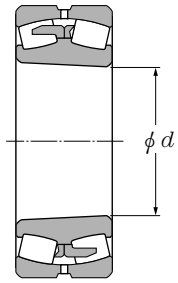

Tapered bore
taper 1:12

d 240～300mm

Boundary dimensions mm				Basic load ratings dynamic kN	static kN	dynamic kgf	static kgf	Bearing numbers Cylindrical bore	Bearing numbers tapered❷ bore	Abutment and fillet dimensions mm		
d	D	B	$r_{s\,min}$❶	C_r	C_{or}	C_r	C_{or}			d_a min	D_a max	r_{as} max
240	360	118	3	1,410	2,770	144,000	282,000	24048B	24048BK30	254	346	2.5
	400	128	4	1,730	3,050	177,000	310,000	23148B	23148BK	258	382	3
	400	160	4	2,110	3,800	215,000	390,000	24148B	24148BK30	258	382	3
	440	120	4	1,940	3,100	198,000	315,000	22248B	22248BK	258	422	3
	440	160	4	2,430	4,100	247,000	420,000	23248B	23248BK	258	422	3
	500	155	5	2,720	4,100	278,000	420,000	22348B	22348BK	262	478	4
247.65	400.05	120.65	4	1,590	2,780	162,000	283,000	2P5002	2P5002K	266	382	3
260	360	70	2.1	805	1,590	82,000	163,000	2P5203	2P5203K	272	348	2
	360	75	2.1	760	1,580	77,500	161,000	23952	23952K	272	348	2
	400	104	4	1,420	2,620	144,000	267,000	23052B	23052BK	278	382	3
	400	140	4	1,830	3,550	186,000	365,000	24052B	24052BK30	278	382	3
	440	144	4	2,140	3,850	219,000	395,000	23152B	23152BK	278	422	3
	440	180	4	2,510	4,600	256,000	470,000	24152B	24152BK30	278	422	3
	480	130	5	2,230	3,600	228,000	365,000	22252B	22252BK	282	458	4
	480	174	5	2,760	4,700	281,000	480,000	23252B	23252BK	282	458	4
	540	165	6	3,100	4,750	320,000	485,000	22352B	22352BK	288	512	5
280	350	52	2	525	1,220	54,000	125,000	23856	23856K	290	340	2
	380	75	2.1	830	1,750	84,500	179,000	23956	23956K	292	368	2
	420	106	4	1,510	2,920	154,000	297,000	23056B	23056BK	298	402	3
	420	140	4	1,950	3,950	199,000	405,000	24056B	24056BK30	298	402	3
	440	160	4	2,180	4,250	222,000	435,000	2P5604	2P5604K	298	422	3
	460	146	5	2,300	4,250	234,000	435,000	23156B	23156BK	302	438	4
	460	180	5	2,730	5,200	278,000	530,000	24156B	24156BK30	302	438	4
	500	130	5	2,310	3,800	236,000	390,000	22256B	22256BK	302	478	4
	500	176	5	2,930	5,150	298,000	525,000	23256B	23256BK	302	478	4
	580	175	6	3,500	5,350	360,000	545,000	22356B	22356BK	308	552	5
290	430	110	4	1,380	2,860	141,000	291,000	2P5802	2P5802K	308	412	3
300	420	90	3	1,110	2,320	113,000	237,000	23960	23960K	314	406	2.5
	460	118	4	1,890	3,550	193,000	365,000	23060B	23060BK	318	442	3
	460	160	4	2,450	4,950	250,000	505,000	24060B	24060BK30	318	442	3
	500	160	5	2,750	5,000	280,000	510,000	23160B	23160BK	322	478	4
	500	200	5	3,300	6,400	340,000	650,000	24160B	24160BK30	322	478	4
	540	140	5	2,670	4,350	272,000	440,000	22260B	22260BK	322	518	4
	540	192	5	3,450	6,000	355,000	615,000	23260B	23260BK	322	518	4

❶ Smallest allowable dimension for chamfer dimension r.
❷ Bearings appended with "**K**" have a tapered bore ratio of 1:12; bearings appended with "**K30**" have a tapered bore ratio of 1:30.

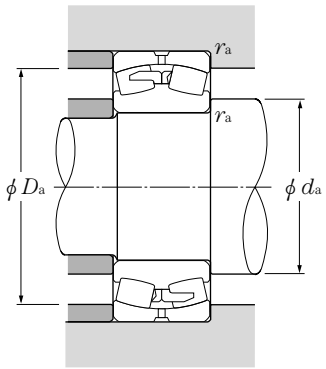

Equivalent bearing load

dynamic

$P_r = XF_r + YF_a$

$\frac{F_a}{F_r} \leqq e$		$\frac{F_a}{F_r} > e$	
X	Y	X	Y
1	Y_1	0.67	Y_2

static

$P_{or} = F_r + Y_o F_a$

For values of e, Y_1, Y_2 and Y_o see the table below.

Constant	Axial load factors			Mass (approx.) kg	
				Cylindrical bore	tapered bore
e	Y_1	Y_2	Y_o		
0.32	2.09	3.12	2.05	43	42.3
0.32	2.11	3.15	2.07	65.8	63.8
0.40	1.69	2.51	1.65	82.2	80.9
0.28	2.43	3.62	2.38	81.7	80
0.37	1.83	2.72	1.79	108	105
0.32	2.10	3.13	2.06	148	145
0.31	2.18	3.24	2.13	58.2	56.3
0.18	3.76	5.60	3.67	21.6	21
0.19	3.53	5.26	3.45	24	23.3
0.26	2.63	3.92	2.57	48.5	46.8
0.34	1.96	2.91	1.91	65.2	64.1
0.33	2.05	3.06	2.01	91.4	88.6
0.41	1.63	2.43	1.60	114	112
0.28	2.45	3.64	2.39	106	104
0.37	1.83	2.72	1.79	141	137
0.32	2.13	3.18	2.09	183	179
0.12	5.42	8.07	5.30	11	10.6
0.17	3.88	5.78	3.79	26.4	25.6
0.25	2.73	4.06	2.67	52.4	50.6
0.33	2.06	3.07	2.02	69	67.9
0.35	1.92	2.86	1.88	88.6	84.9
0.32	2.13	3.18	2.09	97.7	94.6
0.39	1.73	2.58	1.69	120	118
0.26	2.57	3.83	2.51	112	110
0.36	1.90	2.83	1.86	150	145
0.31	2.16	3.22	2.12	224	220
0.25	2.69	4.00	2.63	56	54.1
0.20	3.34	4.98	3.27	40	38.7
0.25	2.66	3.96	2.60	72.4	70.2
0.34	1.97	2.93	1.92	98	96.4
0.32	2.11	3.15	2.07	131	127
0.40	1.69	2.51	1.65	161	159
0.26	2.57	3.83	2.51	141	138
0.36	1.88	2.79	1.83	193	187

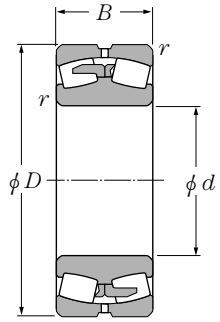

Cylindrical bore

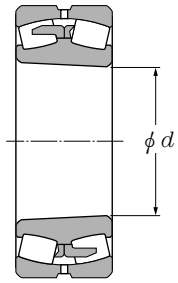

Tapered bore
taper 1:12

d 300～380mm

Boundary dimensions mm				Basic load ratings dynamic kN	static kN	dynamic kgf	static kgf	Bearing numbers		Abutment and fillet dimensions mm		
d	D	B	$r_{s\,min}$ [1]	C_r	C_{or}	C_r	C_{or}	Cylindrical bore	tapered [2] bore	d_a min	D_a max	r_{as} max
300	620	185	7.5	3,600	5,400	365,000	550,000	**22360B**	**22360BK**	336	584	6
320	400	80	2.1	870	2,210	89,000	226,000	**24864**	**24864K30**	332	388	2
	440	90	3	1,140	2,460	116,000	251,000	**23964**	**23964K**	334	426	2.5
	480	121	4	1,960	3,850	200,000	395,000	**23064B**	**23064BK**	338	462	3
	480	160	4	2,510	5,200	255,000	530,000	**24064B**	**24064BK30**	338	462	3
	540	176	5	3,100	5,800	320,000	590,000	**23164B**	**23164BK**	342	518	4
	540	218	5	3,850	7,300	390,000	745,000	**24164B**	**24164BK30**	342	518	4
	580	150	5	3,100	5,050	315,000	515,000	**22264B**	**22264BK**	342	558	4
	580	208	5	4,000	7,050	410,000	720,000	**23264B**	**23264BK**	342	558	4
	580	213	5	3,950	6,900	405,000	705,000	**2P6404**	**2P6404K**	342	558	4
330	540	186	5	3,100	6,000	315,000	615,000	**2P6601**	**2P6601K**	352	518	4
340	460	90	3	1,220	2,650	124,000	270,000	**23968**	**23968K**	354	446	2.5
	520	133	5	2,310	4,550	235,000	465,000	**23068B**	**23068BK**	362	498	4
	520	180	5	3,000	6,200	305,000	630,000	**24068B**	**24068BK30**	362	498	4
	580	190	5	3,600	6,600	365,000	670,000	**23168B**	**23168BK**	362	558	4
	580	243	5	4,600	8,950	470,000	910,000	**24168B**	**24168BK30**	362	558	4
	620	224	6	4,450	8,000	455,000	815,000	**23268B**	**23268BK**	368	592	5
	620	229	6	4,450	8,000	455,000	815,000	**2P6802**	**2P6802K**	368	592	5
360	440	60	2.1	735	1,830	74,500	187,000	**23872**	**23872K**	372	428	2
	480	75	3	1,090	2,350	111,000	239,000	**2P7202**	**2P7202K**	374	466	2.5
	480	90	3	1,320	2,930	135,000	298,000	**23972**	**23972K**	374	466	2.5
	520	133	5	1,790	3,900	182,000	395,000	**2P7201**	**2P7201K**	382	498	4
	530	127	5	2,060	4,100	210,000	415,000	**2P7205**	**2P7205K**	382	508	4
	540	134	5	2,370	4,700	242,000	480,000	**23072B**	**23072BK**	382	518	4
	540	180	5	3,100	6,600	320,000	675,000	**24072B**	**24072BK30**	382	518	4
	600	192	5	3,750	7,050	385,000	715,000	**23172B**	**23172BK**	382	578	4
	600	243	5	4,600	9,150	470,000	935,000	**24172B**	**24172BK30**	382	578	4
	610	255	5	4,300	8,300	440,000	845,000	**2P7206**	**2P7206K**	382	588	4
	650	232	6	4,850	8,700	495,000	885,000	**23272B**	**23272BK**	388	622	5
380	520	106	4	1,560	3,550	159,000	360,000	**23976**	**23976K**	398	502	3
	560	135	5	2,510	5,150	256,000	525,000	**23076B**	**23076BK**	402	538	4
	560	180	5	3,250	7,100	330,000	725,000	**24076B**	**24076BK30**	402	538	4
	620	194	5	3,900	7,500	400,000	765,000	**23176B**	**23176BK**	402	598	4
	620	243	5	4,800	9,650	490,000	985,000	**24176B**	**24176BK30**	402	598	4

[1] Smallest allowable dimension for chamfer dimension r.
[2] Bearings appended with "**K**" have a tapered bore ratio of 1:12; bearings appended with "**K30**" have a tapered bore ratio of 1:30.

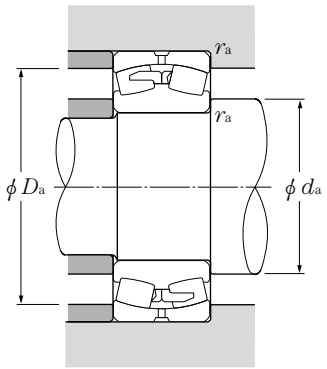

Equivalent bearing load

dynamic

$P_r = XF_r + YF_a$

$\frac{F_a}{F_r} \leqq e$		$\frac{F_a}{F_r} > e$	
X	Y	X	Y
1	Y_1	0.67	Y_2

static

$P_{or} = F_r + Y_o F_a$

For values of e, Y_1, Y_2 and Y_o see the table below.

Constant	Axial load factors			Mass (approx.) kg	
				Cylindrical bore	tapered bore
e	Y_1	Y_2	Y_o		
0.32	2.13	3.17	2.08	270	265
0.17	3.90	5.81	3.82	22.8	22.4
0.19	3.50	5.21	3.42	43	41.7
0.25	2.73	4.06	2.67	78.2	75.5
0.33	2.06	3.07	2.02	103	101
0.33	2.06	3.07	2.02	167	162
0.40	1.67	2.48	1.63	207	204
0.26	2.57	3.83	2.51	172	168
0.36	1.86	2.77	1.82	243	236
0.36	1.86	2.77	1.82	241	233
0.34	1.99	2.96	1.94	166	160
0.17	3.91	5.83	3.83	44.7	43.3
0.25	2.68	3.99	2.62	104	100
0.34	1.98	2.95	1.94	140	138
0.33	2.05	3.06	2.01	210	204
0.42	1.61	2.39	1.57	269	265
0.37	1.84	2.75	1.80	300	291
0.37	1.84	2.75	1.80	298	288
0.12	5.78	8.61	5.66	19.2	18.6
0.14	4.94	7.36	4.83	37.1	36.1
0.17	3.99	5.93	3.90	47.2	45.7
0.25	2.69	4.01	2.63	92.8	89.5
0.23	2.92	4.35	2.86	95.3	92.3
0.24	2.78	4.14	2.72	110	106
0.33	2.06	3.07	2.02	147	145
0.32	2.11	3.15	2.07	222	215
0.40	1.67	2.48	1.63	281	277
0.41	1.64	2.44	1.60	290	277
0.36	1.87	2.78	1.83	339	329
0.19	3.54	5.27	3.46	69.9	67.7
0.24	2.87	4.27	2.80	115	111
0.30	2.23	3.32	2.18	153	150
0.31	2.16	3.22	2.12	235	228
0.39	1.73	2.58	1.69	292	287

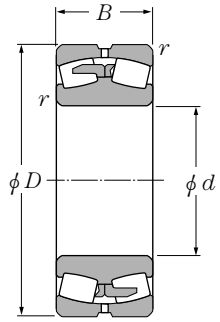

Cylindrical bore

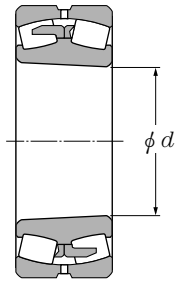

Tapered bore
taper 1:12

d 380～460mm

Boundary dimensions mm				Basic load ratings dynamic kN	static kN	dynamic kgf	static kgf	Bearing numbers		Abutment and fillet dimensions mm		
d	D	B	$r_{s\,min}$ [1]	C_r	C_{or}	C_r	C_{or}	Cylindrical bore	tapered [2] bore	d_a min	D_a max	r_{as} max
380	680	240	6	5,200	9,650	530,000	985,000	**23276B**	**23276BK**	408	652	5
	680	245	6	5,200	9,650	536,000	985,000	**2P7603**	**2P7603K**	408	652	5
390	510	90	3	1,310	3,050	133,000	310,000	**2P7801**	**2P7801K**	404	496	2.5
400	500	100	2.1	1,330	3,500	135,000	360,000	**24880**	**24880K30**	412	488	2
	540	106	4	1,580	3,650	161,000	370,000	**23980**	**23980K**	418	522	3
	600	148	5	2,980	6,050	305,000	615,000	**23080B**	**23080BK**	422	578	4
	600	200	5	3,850	8,400	390,000	855,000	**24080B**	**24080BK30**	422	578	4
	650	200	6	4,200	8,050	425,000	820,000	**23180B**	**23180BK**	428	622	5
	650	250	6	5,100	10,300	520,000	1,060,000	**24180B**	**24180BK30**	428	622	5
	720	256	6	5,850	10,600	595,000	1,080,000	**23280B**	**23280BK**	428	692	5
	720	260	6	5,850	10,600	595,000	1,080,000	**2P8002**	**2P8002K**	428	692	5
420	520	75	2.1	1,090	2,710	111,000	277,000	**23884**	**23884K**	432	508	2
	560	106	4	1,630	3,850	166,000	390,000	**23984**	**23984K**	438	542	3
	620	150	5	3,100	6,400	315,000	650,000	**23084B**	**23084BK**	442	598	4
	620	200	5	3,850	8,450	395,000	865,000	**24084B**	**24084BK30**	442	598	4
	700	224	6	5,200	9,950	530,000	1,020,000	**23184B**	**23184BK**	448	672	5
	700	280	6	6,150	12,200	625,000	1,240,000	**24184B**	**24184BK30**	448	672	5
	760	272	7.5	6,550	12,000	665,000	1,230,000	**23284B**	**23284BK**	456	724	6
440	600	118	4	2,030	4,700	207,000	480,000	**23988**	**23988K**	458	582	3
	650	157	6	3,300	6,850	335,000	695,000	**23088B**	**23088BK**	468	622	5
	650	212	6	4,300	9,450	440,000	960,000	**24088B**	**24088BK30**	468	622	5
	720	226	6	5,200	10,100	530,000	1,030,000	**23188B**	**23188BK**	468	692	5
	720	280	6	6,450	13,100	660,000	1,330,000	**24188B**	**24188BK30**	468	692	5
	790	280	7.5	6,900	12,800	705,000	1,310,000	**23288B**	**23288BK**	476	754	6
	790	285	7.5	6,900	12,800	705,000	1,310,000	**2P8802**	**2P8802K**	476	754	6
450	620	190	3	3,050	7,400	315,000	755,000	**2P9002**	**2P9002K**	464	606	2.5
460	580	118	3	1,840	4,850	187,000	495,000	**24892**	**24892K30**	474	566	2.5
	620	118	4	2,100	4,950	214,000	505,000	**23992**	**23992K**	478	602	3
	620	140	4	2,440	6,000	248,000	610,000	**2P9203**	**2P9203K**	478	602	3
	680	163	6	3,600	7,450	365,000	760,000	**23092B**	**23092BK**	488	652	5
	680	218	6	4,600	10,200	470,000	1,040,000	**24092B**	**24092BK30**	488	652	5
	760	240	7.5	5,700	11,400	585,000	1,160,000	**23192B**	**23192BK**	496	724	6
	760	300	7.5	7,100	14,500	725,000	1,480,000	**24192B**	**24192BK30**	496	724	6

[1] Smallest allowable dimension for chamfer dimension r.
[2] Bearings appended with "**K**" have a tapered bore ratio of 1:12; bearings appended with "**K30**" have a tapered bore ratio of 1:30.

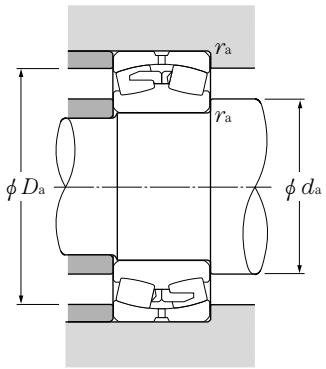

Equivalent bearing load

dynamic

$P_r = XF_r + YF_a$

$\frac{F_a}{F_r} \leqq e$		$\frac{F_a}{F_r} > e$	
X	Y	X	Y
1	Y_1	0.67	Y_2

static

$P_{or} = F_r + Y_o F_a$

For values of e, Y_1, Y_2 and Y_o see the table below.

Constant	Axial load factors			Mass (approx.) kg	
				Cylindrical bore	tapered bore
e	Y_1	Y_2	Y_o		
0.36	1.89	2.82	1.85	380	369
0.36	1.89	2.82	1.85	382	370
0.15	4.41	6.57	4.31	47.3	45.7
0.18	3.76	5.59	3.67	45.3	44.5
0.18	3.71	5.53	3.63	73	70.7
0.24	2.80	4.16	2.73	149	144
0.32	2.09	3.11	2.04	202	200
0.31	2.21	3.28	2.16	264	256
0.38	1.77	2.63	1.73	329	324
0.37	1.81	2.69	1.77	457	443
0.37	1.81	2.69	1.77	457	443
0.12	5.42	8.08	5.30	34.8	33.6
0.17	3.95	5.88	3.86	76.2	73.8
0.24	2.85	4.24	2.78	157	152
0.32	2.13	3.18	2.09	210	207
0.32	2.11	3.15	2.07	354	343
0.40	1.69	2.51	1.65	440	433
0.36	1.86	2.77	1.82	544	528
0.18	3.66	5.46	3.58	101	98
0.24	2.85	4.24	2.78	181	175
0.32	2.11	3.15	2.07	245	241
0.31	2.15	3.21	2.11	370	358
0.39	1.75	2.61	1.71	456	449
0.36	1.88	2.80	1.84	600	582
0.36	1.88	2.80	1.84	595	576
0.27	2.49	3.71	2.43	166	157
0.18	3.76	5.59	3.67	73.6	72.3
0.17	3.95	5.88	3.86	107	104
0.21	3.22	4.80	3.15	122	118
0.23	2.88	4.29	2.82	206	200
0.31	2.15	3.21	2.11	276	272
0.31	2.14	3.19	2.10	443	429
0.39	1.71	2.55	1.67	550	541

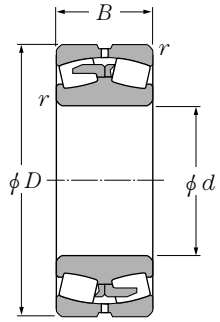

Cylindrical bore

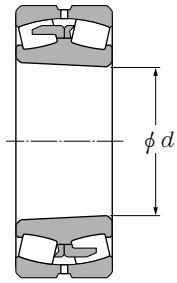

Tapered bore
taper 1:12

d 460～600mm

Boundary dimensions mm				Basic load ratings dynamic kN	static kN	dynamic kgf	static kgf	Bearing numbers		Abutment and fillet dimensions mm		
d	D	B	$r_{s\,min}$ [1]	C_r	C_{or}	C_r	C_{or}	Cylindrical bore	tapered [2] bore	d_a min	D_a max	r_{as} max
460	830	296	7.5	7,750	14,500	790,000	1,470,000	**23292B**	**23292BK**	496	794	6
480	650	128	5	2,330	5,500	238,000	565,000	**23996**	**23996K**	502	628	4
	660	200	3	3,550	8,350	360,000	850,000	**2P9602**	**2P9602K**	494	646	2.5
	700	165	6	3,650	7,700	370,000	785,000	**23096B**	**23096BK**	508	672	5
	700	218	6	4,650	10,500	475,000	1,070,000	**24096B**	**24096BK30**	508	672	5
	790	248	7.5	6,200	12,300	635,000	1,260,000	**23196B**	**23196BK**	516	754	6
	790	308	7.5	7,450	15,300	760,000	1,560,000	**24196B**	**24196BK30**	516	754	6
	870	310	7.5	8,300	15,500	845,000	1,580,000	**23296B**	**23296BK**	516	834	6
490	650	130	5	2,270	5,450	232,000	555,000	**2P9801**	**2P9801K**	512	628	4
500	620	90	3	1,550	3,950	158,000	405,000	**238/500**	**238/500K**	514	606	2.5
	670	128	5	2,370	5,600	242,000	570,000	**239/500**	**239/500K**	522	648	4
	720	167	6	3,850	8,300	390,000	845,000	**230/500B**	**230/500BK**	528	692	5
	720	218	6	4,750	10,900	485,000	1,110,000	**240/500B**	**240/500BK30**	528	692	5
	830	264	7.5	6,950	13,700	705,000	1,400,000	**231/500B**	**231/500BK**	536	794	6
	830	325	7.5	8,050	16,700	825,000	1,700,000	**241/500B**	**241/500BK30**	536	794	6
	920	336	7.5	9,400	17,800	960,000	1,820,000	**232/500B**	**232/500BK**	536	884	6
530	710	136	5	2,640	6,450	269,000	655,000	**239/530**	**239/530K**	552	688	4
	780	185	6	4,400	9,350	445,000	955,000	**230/530B**	**230/530BK**	558	752	5
	780	250	6	5,600	12,700	570,000	1,290,000	**240/530B**	**240/530BK30**	558	752	5
	870	272	7.5	7,000	14,200	715,000	1,450,000	**231/530B**	**231/530BK**	566	834	6
	870	335	7.5	8,300	17,400	850,000	1,770,000	**241/530B**	**241/530BK30**	566	834	6
	980	355	9.5	10,400	19,800	1,060,000	2,020,000	**232/530B**	**232/530BK**	574	936	8
545	755	230	4	4,550	10,800	460,000	1,100,000	**2P10901**	**2P10901K**	563	737	3
560	680	90	3	1,650	4,450	168,000	455,000	**238/560**	**238/560K**	574	666	2.5
	750	140	5	2,830	6,700	288,000	680,000	**239/560**	**239/560K**	582	728	4
	820	195	6	4,800	10,500	490,000	1,070,000	**230/560B**	**230/560BK**	588	792	5
	820	258	6	6,100	14,100	620,000	1,440,000	**240/560B**	**240/560BK30**	588	792	5
	920	280	7.5	7,650	15,500	780,000	1,580,000	**231/560B**	**231/560BK**	596	884	6
	920	355	7.5	9,950	20,800	1,010,000	2,120,000	**241/560B**	**241/560BK30**	596	884	6
	1,030	365	9.5	11,100	21,100	1,130,000	2,150,000	**232/560B**	**232/560BK**	604	986	8
600	800	150	5	3,150	7,800	325,000	795,000	**239/600**	**239/600K**	622	778	4
	870	200	6	5,250	12,000	535,000	1,220,000	**230/600B**	**230/600BK**	628	842	5

[1] Smallest allowable dimension for chamfer dimension r.
[2] Bearings appended with "**K**" have a tapered bore ratio of 1:12; bearings appended with "**K30**" have a tapered bore ratio of 1:30.

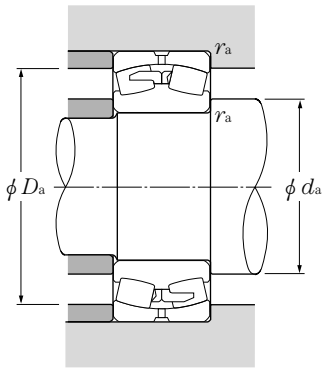

Equivalent bearing load

dynamic

$P_r = XF_r + YF_a$

$\frac{F_a}{F_r} \leqq e$		$\frac{F_a}{F_r} > e$	
X	Y	X	Y
1	Y_1	0.67	Y_2

static

$P_{or} = F_r + Y_o F_a$

For values of e, Y_1, Y_2 and Y_o see the table below.

Constant	Axial load factors			Mass (approx.) kg	
				Cylindrical bore	tapered bore
e	Y_1	Y_2	Y_o		
0.36	1.87	2.78	1.83	704	683
0.18	3.85	5.73	3.76	123	119
0.27	2.52	3.75	2.46	195	185
0.23	2.94	4.38	2.88	217	209
0.30	2.22	3.30	2.17	285	280
0.31	2.15	3.21	2.11	492	477
0.39	1.74	2.59	1.70	608	600
0.36	1.87	2.78	1.83	814	790
0.16	4.10	6.10	4.01	114	109
0.13	5.38	8.02	5.26	59.6	57.5
0.17	4.02	5.98	3.93	131	127
0.23	2.98	4.44	2.91	226	218
0.30	2.28	3.40	2.23	295	290
0.32	2.12	3.16	2.08	584	566
0.39	1.72	2.57	1.69	716	705
0.39	1.74	2.59	1.70	1,000	971
0.17	3.94	5.87	3.86	157	152
0.22	3.03	4.52	2.97	306	295
0.30	2.24	3.33	2.19	413	406
0.30	2.22	3.30	2.17	653	633
0.38	1.79	2.67	1.75	800	788
0.39	1.74	2.59	1.70	1,200	1,170
0.28	2.45	3.65	2.40	301	286
0.11	5.97	8.88	5.83	66.1	63.7
0.16	4.09	6.09	4.00	182	176
0.22	3.03	4.51	2.96	353	340
0.30	2.29	3.40	2.24	467	459
0.30	2.27	3.38	2.22	752	729
0.39	1.75	2.61	1.71	948	934
0.36	1.88	2.80	1.84	1,360	1,320
0.18	3.85	5.73	3.76	218	211
0.21	3.17	4.72	3.10	400	386

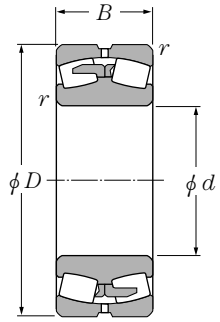

Cylindrical bore

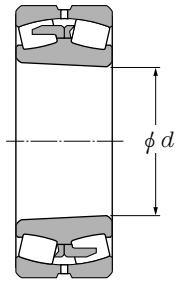

Tapered bore
taper 1:12

d 600～780mm

Boundary dimensions mm				Basic load ratings kN dynamic		kgf dynamic		Bearing numbers		Abutment and fillet dimensions mm		
d	D	B	$r_{s\,min}$ [1]	C_r	C_{or}	C_r	C_{or}	Cylindrical bore	tapered [2] bore	d_a min	D_a max	r_{as} max
600	870	272	6	6,450	15,600	655,000	1,590,000	**240/600B**	**240/600BK30**	628	842	5
	980	300	7.5	9,000	18,400	920,000	1,880,000	**231/600B**	**231/600BK**	636	944	6
	980	375	7.5	10,700	23,200	1,090,000	2,360,000	**241/600B**	**241/600BK30**	636	944	6
	1,090	388	9.5	12,200	23,700	1,240,000	2,420,000	**232/600B**	**232/600BK**	644	1,046	8
630	780	150	4	3,050	8,800	310,000	895,000	**248/630**	**248/630K30**	648	762	3
	850	165	6	3,700	9,250	375,000	945,000	**239/630**	**239/630K**	658	822	5
	920	212	7.5	5,900	13,000	600,000	1,330,000	**230/630B**	**230/630BK**	666	884	6
	920	290	7.5	7,550	17,900	770,000	1,830,000	**240/630B**	**240/630BK30**	666	884	6
	1,030	315	7.5	9,600	19,900	975,000	2,030,000	**231/630B**	**231/630BK**	666	994	6
	1,030	400	7.5	11,600	25,000	1,180,000	2,550,000	**241/630B**	**241/630BK30**	666	994	6
	1,150	412	12	13,700	26,800	1,400,000	2,740,000	**232/630B**	**232/630BK**	684	1,096	10
670	900	170	6	4,100	10,300	420,000	1,050,000	**239/670**	**239/670K**	698	872	5
	980	230	7.5	6,550	14,600	665,000	1,490,000	**230/670B**	**230/670BK**	706	944	6
	980	308	7.5	8,650	20,600	885,000	2,100,000	**240/670B**	**240/670BK30**	706	944	6
	1,090	336	7.5	11,000	22,800	1,120,000	2,330,000	**231/670B**	**231/670BK**	706	1,054	6
	1,090	412	7.5	12,700	28,000	1,300,000	2,850,000	**241/670B**	**241/670BK30**	706	1,054	6
	1,220	438	12	16,100	32,000	1,640,000	3,250,000	**232/670B**	**232/670BK**	724	1,166	10
680	980	220	7.5	6,050	14,000	615,000	1,430,000	**2P13601**	**2P13601K**	716	944	6
710	950	180	6	4,450	11,500	450,000	1,170,000	**239/710**	**239/710K**	738	922	5
	1,030	236	7.5	7,200	16,200	730,000	1,650,000	**230/710B**	**230/710BK**	746	994	6
	1,030	315	7.5	9,300	22,500	945,000	2,300,000	**240/710B**	**240/710BK30**	746	994	6
	1,150	345	9.5	11,600	24,900	1,190,000	2,540,000	**231/710B**	**231/710BK**	754	1,106	8
	1,150	438	9.5	14,500	32,000	1,470,000	3,250,000	**241/710B**	**241/710BK30**	754	1,106	8
	1,280	450	12	16,300	32,500	1,660,000	3,300,000	**232/710B**	**232/710BK**	764	1,226	10
750	920	128	5	3,100	8,450	320,000	865,000	**238/750**	**238/750K**	772	898	4
	1,000	185	6	5,000	13,000	510,000	1,330,000	**239/750**	**239/750K**	778	972	5
	1,090	250	7.5	8,150	18,300	835,000	1,860,000	**230/750B**	**230/750BK**	786	1,054	6
	1,090	335	7.5	10,100	24,600	1,030,000	2,500,000	**240/750B**	**240/750BK30**	786	1,054	6
	1,220	365	9.5	12,800	27,200	1,310,000	2,780,000	**231/750B**	**231/750BK**	794	1,176	8
	1,360	475	15	18,200	36,500	1,860,000	3,750,000	**232/750B**	**232/750BK**	814	1,296	12
760	1,140	325	7.5	10,200	23,800	1,040,000	2,430,000	☆**2P15203**	**2P15203K**	796	1,104	6
780	1,220	375	9.5	12,800	28,700	1,300,000	2,920,000	**2P15605**	**2P15605K**	824	1,176	8

[1] Smallest allowable dimension for chamfer dimension r.
[2] Bearings appended with "**K**" have a tapered bore ratio of 1:12; bearings appended with "**K30**" have a tapered bore ratio of 1:30.
Remarks: 1. Bearing numbers marked "☆" are C type.

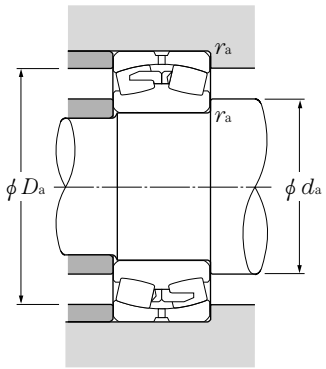

Equivalent bearing load

dynamic

$P_r = XF_r + YF_a$

$\frac{F_a}{F_r} \leqq e$		$\frac{F_a}{F_r} > e$	
X	Y	X	Y
1	Y_1	0.67	Y_2

static

$P_{or} = F_r + Y_o F_a$

For values of e, Y_1, Y_2 and Y_o see the table below.

Constant	Axial load factors			Mass (approx.) kg	
				Cylindrical bore	tapered bore
e	Y_1	Y_2	Y_o		
0.29	2.33	3.47	2.28	544	535
0.30	2.22	3.30	2.17	908	880
0.37	1.81	2.70	1.77	1,130	1,110
0.36	1.86	2.77	1.82	1,540	1,490
0.17	4.07	6.06	3.98	158	155
0.18	3.66	5.45	3.58	277	268
0.22	3.14	4.67	3.07	481	464
0.30	2.28	3.40	2.23	657	646
0.30	2.27	3.38	2.22	1,050	1,020
0.38	1.78	2.66	1.74	1,330	1,310
0.36	1.87	2.78	1.83	1,900	1,840
0.18	3.76	5.59	3.67	317	307
0.22	3.07	4.57	3.00	594	573
0.29	2.29	3.41	2.24	794	781
0.30	2.22	3.30	2.17	1,250	1,210
0.37	1.83	2.73	1.79	1,530	1,510
0.36	1.89	2.81	1.85	2,270	2,200
0.21	3.17	4.72	3.10	550	533
0.18	3.85	5.73	3.76	375	363
0.22	3.02	4.50	2.96	663	640
0.29	2.36	3.51	2.31	884	870
0.29	2.32	3.45	2.27	1,420	1,380
0.37	1.80	2.69	1.76	1,800	1,770
0.35	1.91	2.84	1.87	2,540	2,470
0.12	5.72	8.51	5.59	179	173
0.17	3.90	5.81	3.81	412	399
0.21	3.20	4.76	3.13	790	763
0.29	2.35	3.49	2.29	1,060	1,040
0.29	2.32	3.45	2.27	1,700	1,650
0.35	1.92	2.86	1.88	3,050	2,960
0.24	2.79	4.15	2.73	1,100	1,060
0.30	2.25	3.34	2.20	1,610	1,560

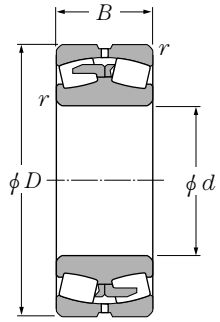

Cylindrical bore

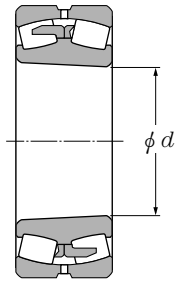

Tapered bore
taper 1:12

d 790～1,060mm

Boundary dimensions mm				Basic load ratings dynamic kN	static kN	dynamic kgf	static kgf	Bearing numbers		Abutment and fillet dimensions mm		
d	D	B	$r_{s\,min}$ ❶	C_r	C_{or}	C_r	C_{or}	Cylindrical bore	tapered ❷ bore	d_a min	D_a max	r_{as} max
790	1,100	310	7.5	8,650	21,000	880,000	2,150,000	**2P15802**	**2P15802K**	826	1,064	6
800	1,060	195	6	5,400	13,700	550,000	1,400,000	**239/800**	**239/800K**	828	1,032	5
	1,150	258	7.5	8,400	19,500	860,000	1,990,000	**230/800B**	**230/800BK**	836	1,114	6
	1,150	345	7.5	11,200	27,800	1,140,000	2,840,000	**240/800B**	**240/800BK30**	836	1,114	6
	1,280	375	9.5	14,400	31,000	1,460,000	3,150,000	**231/800B**	**231/800BK**	844	1,236	8
850	1,030	136	5	3,600	10,500	365,000	1,070,000	**238/850**	**238/850K**	872	1,008	4
	1,120	200	6	5,850	15,100	595,000	1,540,000	**239/850**	**239/850K**	878	1,092	5
	1,220	272	7.5	9,750	22,700	995,000	2,310,000	**230/850B**	**230/850BK**	886	1,184	6
	1,220	290	7.5	9,150	22,000	935,000	2,240,000	**2P17001**	**2P17001K**	886	1,184	6
	1,220	290	7.5	10,500	24,000	1,070,000	2,450,000	☆**2P17011**	**2P17011K**	886	1,184	6
	1,220	330	7.5	11,000	26,900	1,120,000	2,740,000	☆**2P17012**	**2P17012K**	886	1,184	6
	1,220	365	7.5	12,500	31,500	1,270,000	3,200,000	**240/850B**	**240/850BK30**	886	1,184	6
	1,360	400	12	15,500	34,000	1,580,000	3,500,000	**231/850B**	**231/850BK**	904	1,306	10
	1,500	515	15	22,300	47,500	2,270,000	4,850,000	**232/850B**	**232/850BK**	914	1,436	12
900	1,180	206	6	6,650	17,300	675,000	1,770,000	**239/900**	**239/900K**	928	1,152	5
	1,280	280	7.5	10,300	24,700	1,050,000	2,520,000	**230/900B**	**230/900BK**	936	1,244	6
	1,280	375	7.5	13,200	33,500	1,350,000	3,450,000	**240/900B**	**240/900BK30**	936	1,244	6
	1,420	412	12	16,800	38,000	1,720,000	3,850,000	**231/900B**	**231/900BK**	954	1,366	10
950	1,250	224	7.5	7,750	20,500	790,000	2,090,000	**239/950**	**239/950K**	986	1,214	6
	1,280	260	7.5	8,650	22,200	885,000	2,270,000	**2P19014**	**2P19014K**	986	1,244	6
	1,330	300	7.5	8,400	21,200	855,000	2,170,000	**2P19013**	**2P19013K**	986	1,294	6
	1,360	300	7.5	11,500	28,400	1,180,000	2,900,000	**230/950B**	**230/950BK**	986	1,324	6
	1,360	320	7.5	11,500	28,000	1,170,000	2,860,000	☆**2P19022**	**2P19022K**	986	1,324	6
	1,360	412	7.5	15,500	40,000	1,580,000	4,100,000	**240/950B**	**240/950BK30**	986	1,324	6
	1,400	380	7.5	14,100	33,500	1,440,000	3,400,000	**2P19019**	**2P19019K**	986	1,364	6
1,000	1,320	236	7.5	8,600	22,700	875,000	2,310,000	**239/1000**	**239/1000K**	1,036	1,284	6
	1,320	258	7.5	8,500	22,600	865,000	2,300,000	**2P20002**	**2P20002K**	1,036	1,284	6
	1,420	308	7.5	12,400	30,000	1,260,000	3,050,000	**230/1000B**	**230/1000BK**	1,036	1,384	6
	1,420	412	7.5	16,000	42,000	1,640,000	4,250,000	**240/1000B**	**240/1000BK30**	1,036	1,384	6
1,050	1,500	412	9.5	15,800	42,500	1,600,000	4,350,000	☆**2P21001**	**2P21001K**	1,094	1,456	8
1,060	1,400	250	7.5	9,300	24,700	950,000	2,520,000	**239/1060**	**239/1060K**	1,096	1,364	6
	1,500	325	9.5	13,600	33,500	1,390,000	3,400,000	**230/1060B**	**230/1060BK**	1,104	1,456	8

❶ Smallest allowable dimension for chamfer dimension r.
❷ Bearings appended with "**K**" have a tapered bore ratio of 1:12; bearings appended with "**K30**" have a tapered bore ratio of 1:30.
Remarks: 1. Bearing numbers marked "☆" are C type.

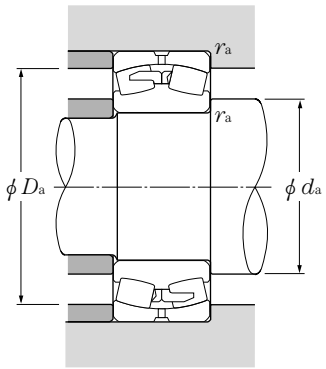

Equivalent bearing load

dynamic

$P_r = XF_r + YF_a$

$\frac{F_a}{F_r} \leqq e$		$\frac{F_a}{F_r} > e$	
X	Y	X	Y
1	Y_1	0.67	Y_2

static

$P_{or} = F_r + Y_o F_a$

For values of e, Y_1, Y_2 and Y_o see the table below.

Constant	Axial load factors			Mass (approx.)	
				kg	
				Cylindrical bore	tapered bore
e	Y_1	Y_2	Y_o		
0.24	2.76	4.11	2.70	857	817
0.17	4.05	6.04	3.96	487	471
0.21	3.15	4.69	3.08	890	859
0.28	2.41	3.59	2.36	1,190	1,170
0.29	2.32	3.45	2.27	1,890	1,830
0.11	6.01	8.94	5.87	232	223
0.16	4.25	6.32	4.15	550	532
0.20	3.32	4.95	3.25	1,050	1,010
0.23	2.98	4.44	2.92	1,100	1,070
0.21	3.28	4.88	3.21	1,060	1,020
0.23	2.90	4.31	2.83	1,200	1,160
0.28	2.42	3.61	2.37	1,410	1,390
0.28	2.37	3.54	2.32	2,270	2,200
0.35	1.94	2.89	1.90	3,890	3,780
0.16	4.32	6.44	4.23	623	603
0.20	3.32	4.95	3.25	1,170	1,130
0.27	2.48	3.70	2.43	1,570	1,540
0.28	2.42	3.60	2.36	2,500	2,420
0.16	4.20	6.26	4.11	774	749
0.17	3.98	5.92	3.89	921	888
0.18	3.66	5.46	3.58	1,210	1,170
0.21	3.26	4.85	3.18	1,430	1,380
0.20	3.33	4.96	3.25	1,450	1,400
0.28	2.39	3.56	2.34	1,970	1,940
0.24	2.77	4.13	2.71	1,940	1,870
0.16	4.21	6.26	4.11	916	887
0.16	4.23	6.30	4.14	911	877
0.20	3.37	5.02	3.29	1,580	1,520
0.27	2.51	3.73	2.45	2,110	2,080
0.24	2.85	4.25	2.79	2,290	2,200
0.16	4.28	6.37	4.19	1,090	1,060
0.20	3.36	5.00	3.28	1,850	1,790

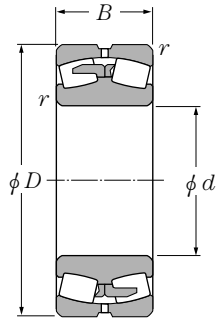

Cylindrical bore

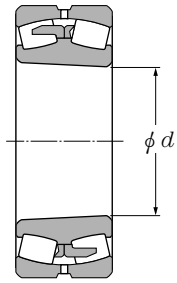

Tapered bore
taper 1:12

d 1,060～1,800mm

Boundary dimensions mm				Basic load ratings dynamic kN		Basic load ratings static kgf		Bearing numbers		Abutment and fillet dimensions mm		
d	D	B	$r_{s\,min}$ [1]	C_r	C_{or}	C_r	C_{or}	Cylindrical bore	tapered [2] bore	d_a min	D_a max	r_{as} max
1,060	1,500	340	9.5	13,100	32,000	1,340,000	3,250,000	**2P21202**	**2P21202K**	1,104	1,456	8
	1,500	438	9.5	17,800	47,000	1,810,000	4,800,000	**240/1060B**	**240/1060BK30**	1,104	1,456	8
1,120	1,360	180	6	6,200	18,700	630,000	1,900,000	**238/1120**	**238/1120K**	1,148	1,332	5
	1,460	250	7.5	9,850	26,700	1,000,000	2,720,000	**239/1120**	**239/1120K**	1,156	1,424	6
	1,580	345	9.5	15,600	39,000	1,590,000	4,000,000	**230/1120B**	**230/1120BK**	1,164	1,536	8
	1,580	462	9.5	19,500	52,500	1,990,000	5,350,000	**240/1120B**	**240/1120BK30**	1,164	1,536	8
1,180	1,420	180	6	6,350	19,700	650,000	2,010,000	**238/1180**	**238/1180K**	1,208	1,392	5
	1,540	272	7.5	11,000	29,800	1,120,000	3,050,000	**239/1180**	**239/1180K**	1,216	1,504	6
	1,540	355	7.5	13,700	40,500	1,390,000	4,150,000	**249/1180**	**249/1180K30**	1,216	1,504	6
	1,660	475	9.5	20,700	55,500	2,110,000	5,650,000	**240/1180B**	**240/1180BK30**	1,224	1,616	8
1,200	1,700	410	9.5	17,600	44,500	1,800,000	4,550,000	**2P24005**	**2P24005K**	1,244	1,656	8
	1,700	410	12	17,800	45,000	1,810,000	4,600,000	☆**2P24007**	**2P24007K**	1,254	1,646	10
1,250	1,630	280	7.5	12,100	33,500	1,230,000	3,400,000	**239/1250**	**239/1250K**	1,286	1,594	6
	1,750	390	9.5	17,200	44,000	1,760,000	4,500,000	**2P25002**	**2P25002K**	1,294	1,706	8
1,320	1,720	300	7.5	13,600	38,000	1,390,000	3,900,000	**239/1320**	**239/1320K**	1,356	1,684	6
	1,850	480	12	22,200	58,500	2,270,000	5,950,000	**2P26402**	**2P26402K**	1,374	1,796	10
	1,850	530	12	25,200	67,500	2,570,000	6,900,000	**240/1320B**	**240/1320BK30**	1,374	1,796	10
1,400	1,820	315	9.5	15,100	43,000	1,540,000	4,400,000	**239/1400**	**239/1400K**	1,444	1,776	8
1,500	1,820	315	7.5	12,300	41,500	1,260,000	4,200,000	**248/1500**	**248/1500K30**	1,536	1,784	6
1,800	2,180	375	9.5	17,500	60,500	1,790,000	6,200,000	**248/1800**	**248/1800K30**	1,844	2,136	8

[1] Smallest allowable dimension for chamfer dimension r.
[2] Bearings appended with "**K**" have a tapered bore ratio of 1:12; bearings appended with "**K30**" have a tapered bore ratio of 1:30.
Remarks: 1. Bearing numbers marked "☆" are C type.

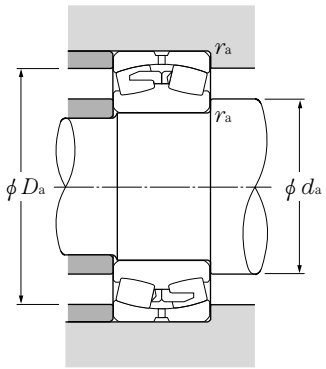

Equivalent bearing load

dynamic

$P_r = XF_r + YF_a$

$\frac{F_a}{F_r} \leqq e$		$\frac{F_a}{F_r} > e$	
X	Y	X	Y
1	Y_1	0.67	Y_2

static

$P_{or} = F_r + Y_o F_a$

For values of e, Y_1, Y_2 and Y_o see the table below.

Constant	Axial load factors			Mass (approx.) kg	
				Cylindrical bore	tapered bore
e	Y_1	Y_2	Y_o		
0.21	3.25	4.83	3.17	1,870	1,810
0.27	2.49	3.71	2.44	2,450	2,140
0.11	5.97	8.89	5.84	536	517
0.15	4.42	6.58	4.32	1,140	1,100
0.21	3.29	4.80	3.21	2,160	2,090
0.27	2.50	3.72	2.44	2,890	2,840
0.11	6.27	9.34	6.13	559	539
0.15	4.40	6.55	4.30	1,390	1,340
0.21	3.28	4.88	3.21	1,740	1,660
0.27	2.54	3.78	2.48	3,220	3,170
0.21	3.19	4.75	3.12	2,860	2,750
0.21	3.21	4.77	3.14	2,830	2,730
0.15	4.42	6.58	4.32	1,600	1,550
0.20	3.31	4.93	3.24	2,880	2,780
0.16	4.34	6.46	4.24	1,900	1,840
0.22	3.12	4.64	3.05	3,830	3,670
0.25	2.65	3.94	2.59	4,320	4,240
0.15	4.39	6.54	4.29	2,230	2,160
0.15	4.54	6.75	4.43	1,660	1,580
0.15	4.47	6.65	4.37	2,830	2,770

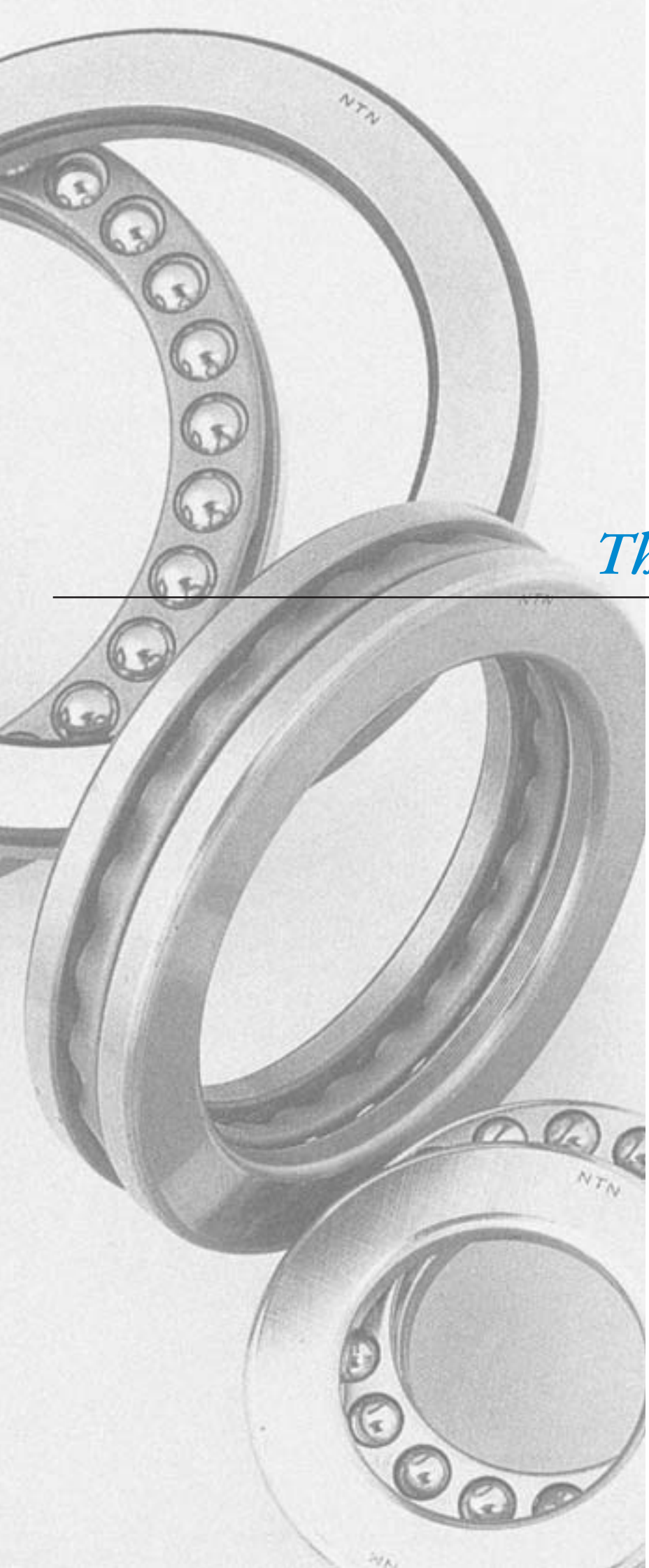

Thrust bearings

1. Classification and Features

1. 1 Thrust ball bearings

Balls are arranged between a set of washers (a shaft washer and housing washer) and the contact angle is 90° . Axial loads can be supported in only one direction and radial loads cannot be supported. These bearings are unsuitable for high speed operation. **Table 1** shows the standard cage models.

Table 1 Standard cage model

Bearing series	511	512	513	514
Press cage	51120 ～51152	51220 ～51224	51320	—
Machined cage	51156 ～511/750	51226 ～51292	51322 ～51340	51420

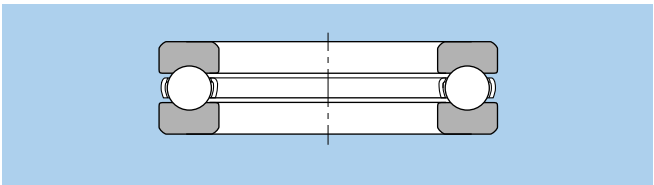

Fig.1 Single type thrust ball bearing (Example of the press cage)

1. 2 Cylindrical roller thrust bearings

These bearings use cylindrical rollers and have single row, double row, 3 row, 4 row, and also duplex types. Bearings can support only axial loads and are suitable to heavy loads. Their axial rigidity is high. Cages are the machined type.

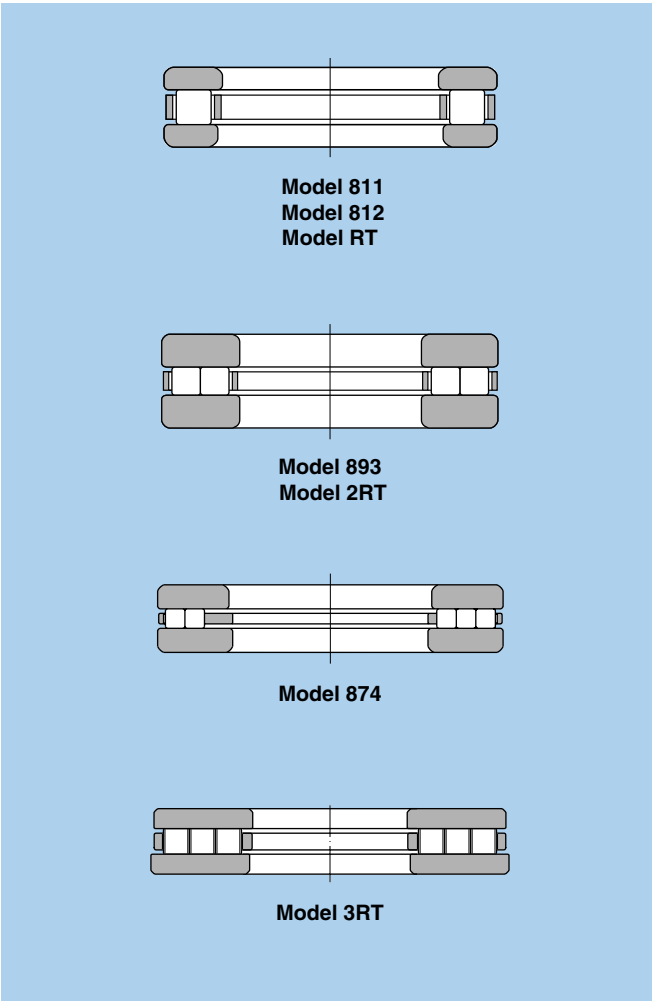

Fig.2 Cylindrical roller thrust bearing

1. 3 Tapered roller thrust bearings

These are thrust bearings using tapered rollers, and the single type bearings have three types of housing washers. One type is the housing raceway with a rib, the other one is without a rib, and the third bearing is the full complement roller type. Double type bearings are mainly used to support axial loads on the roll neck of rolling mill. Machined cages are used for cages.

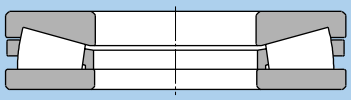

Drawing 1

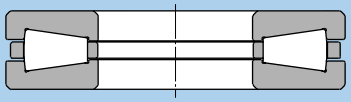

Drawing 2

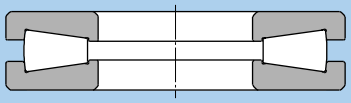

Drawing 3

Fig.3 Tapered roller thrust bearings (Single type)

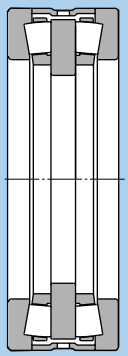

Fig.4 Tapered roller thrust bearings (Double type)

1. 4 Self-aligning thrust roller bearings

These bearings have a self-aligning nature using barrel-shaped rollers. The allowable aligning angle varies depending on the bearing's dimension system, but it is 1°-2° for normal loads. Cages are machined type and the guide sleeve is on the axial housing raceway. Since the load capacity for axial loads is high, these bearings can support a certain amount of radial load in the instances that axial loads are applied. However, it is necessary to use these bearing where the load conditions meet $F_r/F_a \leqq 0.55$.

These bearings have some spots where lubricant cannot enter such as the gap between the cage and guide sleeve. It is necessary to use oil lubrication even in low speed operation.

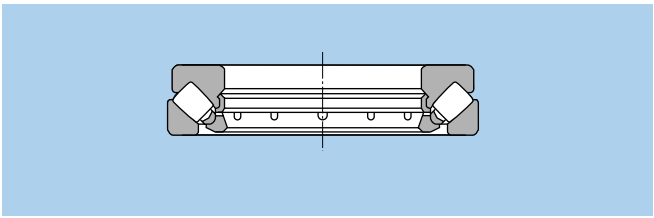

Fig.5 Self-aligning thrust roller bearing

2. Dimensional Accuracy / Rotation Accuracy

Thrust ball bearings ·····**Table 3.6 (Page A-18)**
Cylindrical roller thrust bearings ·····**Table 3.6 (Page A-18)**
Tapered roller thrust bearings·····**Table 3.8 (Page A-19)**
Self-aligning thrust roller bearings ·····**Table 3.8 (Page A-19)**

3. Recommended Fitting

Thrust ball bearings
Cylindrical roller thrust bearings
Tapered roller thrust bearings
Self-aligning thrust roller bearings
} **Table 4.3 (Page A-26)**

4. General Operating Cautions

Thrust bearings need to load a certain amount of axial load to prevent sliping between the rolling elements and axial housing raceway. Please consult with **NTN** Engineering for details.

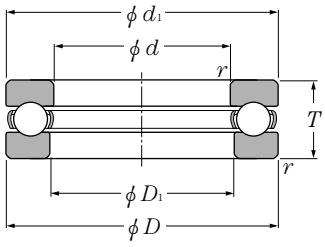

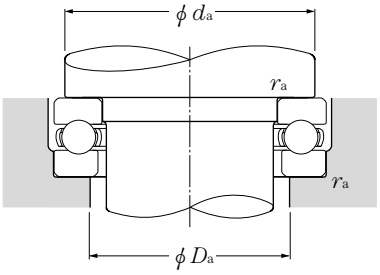

Equivalent bearing load
dynamic
$P_a = F_a$

static
$P_{oa} = F_a$

d 100～190mm

Boundary dimensions mm				Basic load ratings dynamic kN	Basic load ratings static kN	Basic load ratings dynamic kgf	Basic load ratings static kgf	Bearing numbers	Dimensions mm		Abutment and fillet dimensions mm			Mass kg
d	D	T	$r_{s\,min}$ ❶	C_a	C_{oa}	C_a	C_{oa}		$d_{1s\,max}$ ❷	$D_{1s\,min}$ ❸	d_a min	D_a max	r_{as} max	(approx.)
100	135	25	1	85.0	268	8,700	27,300	**51120**	135	102	121	114	1	0.987
	150	38	1.1	147	410	14,900	42,000	**51220**	150	103	130	120	1	2.29
	170	55	1.5	237	595	24,100	60,500	**51320**	170	103	142	128	1.5	4.88
	210	85	3	370	970	37,500	99,000	＊**51420**	205	103	165	145	2.5	14.7
110	145	25	1	87.0	288	8,900	29,400	**51122**	145	112	131	124	1	1.07
	160	38	1.1	153	450	15,600	46,000	**51222**	160	113	140	130	1	2.46
	190	63	2	267	705	27,300	72,000	＊**51322**	187	113	158	142	2	7.67
120	155	25	1	89.0	310	9,100	31,500	**51124**	155	122	141	134	1	1.11
	170	39	1.1	154	470	15,700	48,000	**51224**	170	123	150	140	1	2.71
	210	70	2.1	296	805	30,000	82,500	＊**51324**	205	123	173	157	2	10.8
130	170	30	1	104	350	10,600	36,000	**51126**	170	132	154	146	1	1.73
	190	45	1.5	191	565	19,400	57,500	＊**51226**	187	133	166	154	1.5	4.22
	225	75	2.1	330	960	33,500	97,500	＊**51326**	220	134	186	169	2	12.7
140	180	31	1	107	375	10,900	38,500	＊**51128**	178	142	164	156	1	1.90
	200	46	1.5	193	595	19,700	60,500	＊**51228**	197	143	176	164	1.5	4.77
	240	80	2.1	350	1,050	35,500	107,000	＊**51328**	235	144	199	181	2	15.3
150	190	31	1	109	400	11,100	41,000	＊**51130**	188	152	174	166	1	2.00
	215	50	1.5	220	685	22,400	70,000	＊**51230**	212	153	189	176	1.5	5.87
	250	80	2.1	360	1,130	37,000	115,000	＊**51330**	245	154	209	191	2	16.1
160	200	31	1	112	425	11,400	43,500	＊**51132**	198	162	184	176	1	2.10
	225	51	1.5	223	720	22,800	73,000	＊**51232**	222	163	199	186	1.5	6.32
	270	87	3	450	1,470	45,500	150,000	＊**51332**	265	164	225	205	2.5	20.7
170	215	34	1.1	134	510	13,700	52,000	＊**51134**	213	172	197	188	1	2.77
	240	55	1.5	261	835	26,600	85,000	＊**51234**	237	173	212	198	1.5	7.81
	280	87	3	465	1,570	47,000	160,000	＊**51334**	275	174	235	215	2.5	21.6
180	225	34	1.1	135	525	13,700	54,000	＊**51136**	222	183	207	198	1	2.92
	250	56	1.5	266	875	27,100	89,000	＊**51236**	247	183	222	208	1.5	8.34
	300	95	3	490	1,700	50,000	174,000	＊**51336**	295	184	251	229	2.5	27.5
190	240	37	1.1	170	655	17,400	67,000	＊**51138**	237	193	220	210	1	3.75
	270	62	2	310	1,060	31,500	108,000	＊**51238**	267	194	238	222	2	11.3

❶ Smallest allowable dimension for chamfer dimension r. ❷ Maximum allowable dimension for shaft washer outer dimension d_1. ❸ Maximum allowable dimension for housing washer inner dimension D_1. Remarks: Bearing numbers marked "＊" signify bearings where the bearing shaft washer outer diameter is smaller than the housing shaft washer outer diameter. Therefore when using these bearings, it is possible to use the housing bore as is, without providing a ground undercut on the outer diameter section of the bearing shaft washer as shown in the drawing.

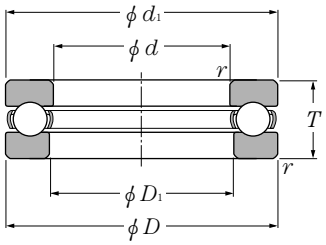

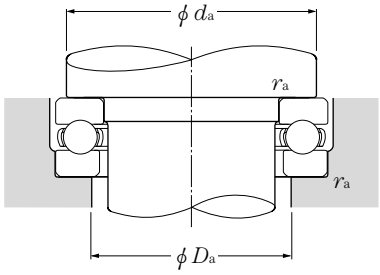

Equivalent bearing load
dynamic
$P_a = F_a$

static
$P_{oa} = F_a$

d 190～420mm

Boundary dimensions mm				Basic load ratings dynamic kN	static kN	dynamic kgf	static kgf	Bearing numbers	Dimensions mm		Abutment and fillet dimensions mm			Mass kg
d	D	T	$r_{s\,min}$ ❶	C_a	C_{oa}	C_a	C_{oa}		$d_{1s\,max}$ ❷	$D_{1s\,min}$ ❸	d_a min	D_a max	r_{as} max	(approx.)
190	320	105	4	545	1,950	55,500	199,000	＊**51338**	315	195	266	244	3	35.0
200	250	37	1.1	172	675	17,500	69,000	＊**51140**	247	203	230	220	1	3.92
	280	62	2	315	1,110	32,000	113,000	＊**51240**	277	204	248	232	2	11.8
	340	110	4	595	2,220	61,000	227,000	＊**51340**	335	205	282	258	3	41.8
220	270	37	1.1	177	740	18,100	75,500	＊**51144**	267	223	250	240	1	4.27
	300	63	2	325	1,210	33,000	123,000	＊**51244**	297	224	268	252	2	13.0
240	300	45	1.5	228	935	23,200	95,000	＊**51148**	297	243	276	264	1.5	6.87
	340	78	2.1	415	1,650	42,500	168,000	＊**51248**	335	244	299	281	2	22.4
260	320	45	1.5	232	990	23,600	101,000	＊**51152**	317	263	296	284	1.5	7.38
	360	79	2.1	440	1,810	45,000	184,000	＊**51252**	355	264	319	301	2	24.2
280	350	53	1.5	305	1,270	31,000	130,000	＊**51156**	347	283	322	308	1.5	11.8
	380	80	2.1	460	1,970	47,000	201,000	＊**51256**	375	284	339	321	2	26.1
300	380	62	2	355	1,560	36,000	159,000	＊**51160**	376	304	348	332	2	17.2
	420	95	3	590	2,680	60,000	273,000	＊**51260**	415	304	371	349	2.5	40.6
320	400	63	2	365	1,660	37,000	169,000	＊**51164**	396	324	368	352	2	18.4
	440	95	3	595	2,800	61,000	285,000	＊**51264**	435	325	392	368	2.5	44.9
340	420	64	2	375	1,760	38,000	179,000	＊**51168**	416	344	388	372	2	19.7
	460	96	3	605	2,920	61,500	298,000	＊**51268**	455	345	412	388	2.5	47.8
360	440	65	2	380	1,860	39,000	190,000	＊**51172**	436	364	408	392	2	21.1
	500	110	4	720	3,650	73,500	375,000	＊**51272**	495	365	444	416	3	69.0
380	460	65	2	380	1,910	39,000	195,000	＊**51176**	456	384	428	412	2	22.3
	520	112	4	735	3,800	74,500	390,000	＊**51276**	515	385	464	436	3	73.7
400	480	65	2	390	2,010	40,000	205,000	＊**51180**	476	404	448	432	2	23.3
	540	112	4	745	3,950	76,000	405,000	＊**51280**	535	405	484	456	3	76.9
420	500	65	2	395	2,110	40,500	215,000	＊**51184**	495	424	468	452	2	24.4
	580	130	5	865	4,850	88,500	490,000	＊**51284**	575	425	516	484	4	109

❶ Smallest allowable dimension for chamfer dimension r. ❷ Maximum allowable dimension for shaft washer outer dimension d_1. ❸ Maximum allowable dimension for housing washer inner dimension D_1. Remarks: Bearing numbers marked "＊" signify bearings where the bearing shaft washer outer diameter is smaller than the housing shaft washer outer diameter. Therefore when using these bearings, it is possible to use the housing bore as is, without providing a ground undercut on the outer diameter section of the bearing shaft washer as shown in the drawing.

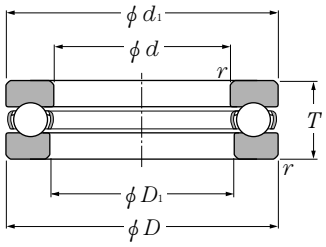

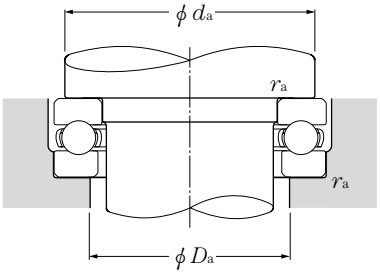

Equivalent bearing load
dynamic
$P_a = F_a$

static
$P_{oa} = F_a$

d 440～750mm

Boundary dimensions mm				Basic load ratings dynamic kN	Basic load ratings static kN	Basic load ratings dynamic kgf	Basic load ratings static kgf	Bearing numbers	Dimensions mm		Abutment and fillet dimensions mm			Mass kg
d	D	T	$r_{s\,min}$ ❶	C_a	C_{oa}	C_a	C_{oa}		$d_{1s\,max}$ ❷	$D_{1s\,min}$ ❸	d_a min	D_a max	r_{as} max	(approx.)
440	540	80	2.1	515	2,850	52,500	291,000	＊51188	535	444	499	481	2	40.0
	600	130	5	855	4,850	87,500	490,000	＊51288	595	445	536	504	4	113
460	560	80	2.1	525	3,000	53,500	305,000	＊51192	555	464	519	501	2	41.6
	620	130	5	895	5,250	91,000	535,000	＊51292	615	465	556	524	4	118
480	580	80	2.1	525	3,100	54,000	315,000	＊51196	575	484	539	521	2	43.3
500	600	80	2.1	575	3,400	58,500	345,000	＊511/500	595	504	559	541	2	45.0
530	640	85	3	645	4,000	66,000	405,000	＊511/530	635	534	595	575	2.5	55.8
560	670	85	3	595	3,750	60,500	385,000	＊511/560	665	564	625	605	2.5	59.4
600	710	85	3	645	4,200	66,000	430,000	＊511/600	705	604	666	644	2.5	62.6
630	750	95	3	720	4,850	73,500	495,000	＊511/630	745	634	702	678	2.5	82.5
670	800	105	4	825	5,850	84,000	600,000	＊511/670	795	674	748	722	3	105
710	850	112	4	875	6,350	89,000	650,000	＊511/710	845	714	794	766	3	129
750	900	120	4	1,010	7,650	103,000	780,000	＊511/750	895	755	841	809	3	155

❶ Smallest allowable dimension for chamfer dimension r. ❷ Maximum allowable dimension for shaft washer outer dimension d_1. ❸ Maximum allowable dimension for housing washer inner dimension D_1. Remarks: Bearing numbers marked "＊" signify bearings where the bearing shaft washer outer diameter is smaller than the housing shaft washer outer diameter. Therefore when using these bearings, it is possible to use the housing bore as is, without providing a ground undercut on the outer diameter section of the bearing shaft washer as shown in the drawing.

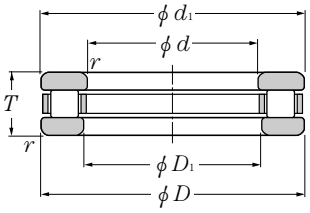

Type 811
Type 812

Type 893

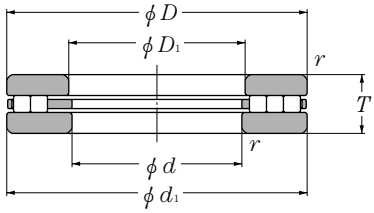

Type 874

d 100～180mm

Boundary dimensions mm				Basic load ratings dynamic kN	static kN	dynamic kgf	static kgf	Bearing numbers
d	D	T	$r_{s\,min}$ ❶	C_a	C_{oa}	C_a	C_{oa}	
100	135	25	1	158	555	16,100	57,000	81120L1
	150	38	1.1	243	795	24,800	81,000	81220L1
	170	42	1.5	335	1,370	34,500	140,000	89320L1
	210	50	3	580	2,650	59,000	271,000	87420L1
110	145	25	1	165	605	16,800	61,500	81122L1
	160	38	1.1	259	885	26,400	90,000	81222L1
	190	48	2	430	1,770	44,000	180,000	89322L1
	230	54	3	725	3,150	74,000	325,000	87422L1
120	155	25	1	172	655	17,500	66,500	81124L1
	170	39	1.1	264	930	26,900	94,500	81224L1
	210	54	2.1	555	2,300	56,500	235,000	89324L1
	250	58	4	830	3,900	84,500	395,000	87424L1
130	170	30	1	197	755	20,100	77,000	81126L1
	190	45	1.5	360	1,210	36,500	123,000	81226L1
	225	58	2.1	615	2,600	63,000	265,000	89326L1
	270	63	4	895	4,250	91,500	435,000	87426L1
140	180	31	1	206	815	21,000	83,000	81128L1
	200	46	1.5	370	1,280	38,000	130,000	81228L1
	240	60	2.1	695	2,980	71,000	305,000	89328L1
	280	63	4	940	4,600	96,000	470,000	87428L1
150	190	31	1	214	870	21,800	89,000	81130L1
	215	50	1.5	455	1,580	46,000	161,000	81230L1
	250	60	2.1	710	3,130	72,500	320,000	89330L1
160	200	31	1	221	930	22,600	95,000	81132L1
	225	51	1.5	518	1,930	53,000	197,000	81232L1
	270	67	3	835	3,690	85,500	375,000	89332L1

❶ Smallest allowable dimension for chamfer dimension r.

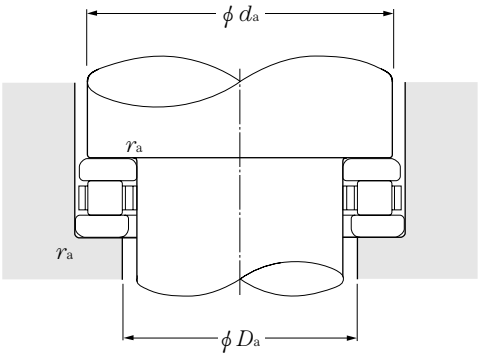

Dimensions mm		Abutment and fillet dimensions mm			Mass kg
d_1	D_1	d_a min	D_a max	r_{as} max	(approx.)
135	102	128	106	1	1.220
150	103	139	109	1	2.730
170	103	163	110	1.5	4.500
210	103	203	112	3	9.500
145	112	138	116	1	1.330
160	113	149	119	1	2.980
190	113	183	122	2	6.350
230	113	221	118	3	11.850
155	122	148	126	1	1.410
170	123	159	129	1	3.280
210	123	201	132	2	9.000
250	123	241	132	4	15.690
170	132	162	137	1	2.020
187	133	178	140	1.5	5.050
225	134	216	143	2	10.370
270	134	262	147	4	19.750
178	142	172	147	1	2.250
197	143	188	150	1.5	5.460
240	144	231	154	2	12.600
280	144	273	158	4	20.940
188	152	182	157	1	2.410
212	153	202	160	1.5	6.870
250	154	242	165	2	13.320
198	162	192	167	1	2.500
222	163	216	174	1.5	6.910
270	164	262	177	3	17.250

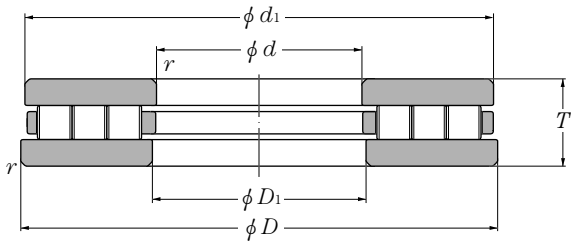

d 180～304.8mm

Boundary dimensions mm				Basic load ratings dynamic kN	static kN	dynamic kgf	static kgf	Bearing numbers
d	D	T	$r_{s\,min}$ ❶	C_a	C_{oa}	C_a	C_{oa}	
180	220	22	1.0	160	715	16,300	72,500	**RT3615**
	300	73	3.0	1,090	4,900	111,000	495,000	**2RT3618**
190	270	62	2.5	745	2,780	76,000	284,000	**RT3812**
	330	70	4.0	1,260	5,900	129,000	600,000	**2RT3811**
200	340	75	5.0	1,320	6,150	134,000	630,000	**2RT4028**
	340	85	5.0	1,260	4,950	128,000	505,000	**2RT4030**
	370	85	4.0	1,760	7,400	179,000	755,000	**2RT4024**
	400	122	5.0	2,230	8,250	227,000	840,000	**2RT4032**
203.2	406.4	76.2	6.0	1,530	7,850	156,000	800,000	**3RT4101**
210	250	25	1.5	133	635	13,600	64,500	**RT4206**
220	270	25	1.0	217	1,060	22,100	109,000	**RT4411**
	360	85	outer 4.0 inner 2.0	1,380	5,950	140,000	610,000	**2RT4416**
	400	80	2.0	1,720	7,750	175,000	790,000	**2RT4425**
	430	88	5.0	1,880	9,100	191,000	930,000	**3RT4406**
222.25	520.7	114.3	4.0	5,100	20,500	520,000	2,090,000	**2RT4426**
	520.7	165	4.0	5,100	20,500	520,000	2,090,000	**2RT4427**
240	320	45	2.0	670	3,350	6,800	340,000	**2RT4814**
	425	90	2.0	1,820	8,850	186,000	905,000	**2RT4803**
254	457.2	95.25	6.0	2,360	12,100	240,000	1,240,000	**3RT5107**
260	340	55	1.5	790	3,350	80,500	340,000	**RT5211**
270	540	105	5.0	3,100	15,800	315,000	1,610,000	**3RT5404**
280	380	55	2.5	645	2,900	65,500	296,000	**RT5606**
	520	109	4.0	2,900	13,200	296,000	1,340,000	**2RT5610**
290	350	35	1.5	345	1,760	35,000	180,000	**RT5805**
304.8	457.2	95.25	6.0	1,770	8,250	181,000	840,000	**2RT6108**

❶ RT: single row, 2RT: double row, 3RT: triple row
❷ Smallest allowable dimension for chamfer dimension r.

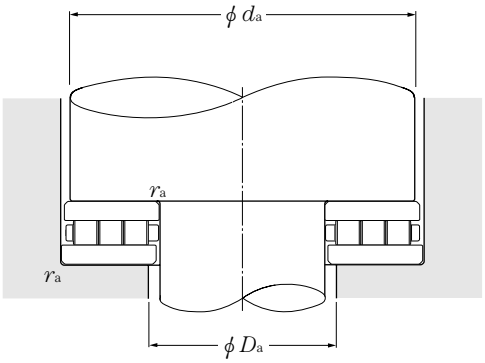

Dimensions mm		Abutment and fillet dimensions mm			Mass kg
d_1	D_1	d_a min	D_a max	r_{as} max	(approx.)
219	181	213	187	1	1.77
300	184	298	188	2.5	23.3
270	195	264	196	2	11.9
329.5	190.5	327	200	3	27.9
340	201	335	204	4	31.4
340	202	332	212	4	35.0
370	200.5	362	210	3	44.3
396	204	388	216	4	80.3
404.038	205.562	389	214	5	52.1
250	210	243	217	1.5	2.51
269	221	262	234	1	3.16
359	221	349	233	outer 3 inner 2	38.1
399	221	382	244	2	48.5
430	222	418	230	4	64.6
514.7	228	511	231	3	135
514.7	228	511	231	3	203
316	244	313	247	2	10.4
425	241	408	254	2	61.6
456	256	453	261	5	76.0
339.5	260.4	328	270	1.5	13.9
530	277	530	282	4	125
375	285	358	302	2	18.0
520	280	501	309	3	113
350	290	338	302	1.5	6.92
454.8	307.2	450	318	5	60.0

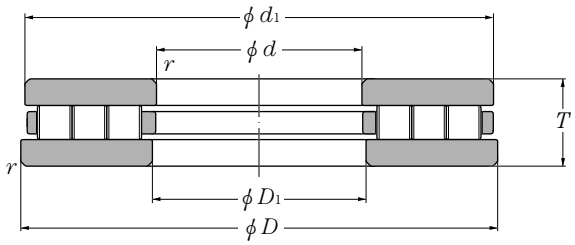

d 320～560mm

Boundary dimensions mm				Basic load ratings dynamic kN	static kN	dynamic kgf	static kgf	Bearing numbers
d	D	T	$r_{s\,min}$ ❶	C_a	C_{oa}	C_a	C_{oa}	
320	380	30	1.5	274	1,510	28,000	154,000	**RT6405**
	440	95	3.0	1,670	7,100	171,000	725,000	**RT6406**
	600	115	5.0	4,100	20,600	415,000	2,110,000	**3RT6404**
360	610	120	5.0	3,800	18,200	390,000	1,860,000	**2RT7205**
380	520	112	4.0	1,900	7,850	194,000	800,000	**RT7607**
400	500	63	4.0	1,300	6,400	132,000	650,000	**RT8009**
	540	85	4.0	1,970	10,100	200,000	1,030,000	**RT8005**
425	650	110	4.0	3,500	19,200	360,000	1,960,000	**2RT8502**
440	540	45	2.5	755	5,300	77,000	540,000	**2RT8807**
540	705	100	5.0	2,240	11,700	228,000	1,200,000	**RT10802**
560	660	50	3.0	1,040	7,850	106,000	800,000	**2RT11207**
	670	85	3.0	1,850	10,200	188,000	1,040,000	**RT11204**
	820	113	5.0	4,350	26,000	445,000	2,650,000	**2RT11208**

❶ RT: single row, 2RT: double row, 3RT: triple row
❷ Smallest allowable dimension for chamfer dimension r.

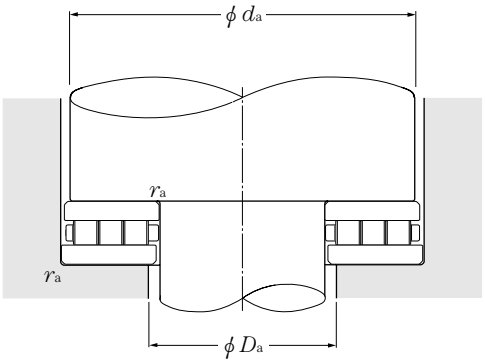

Dimensions mm		Abutment and fillet dimensions mm			Mass kg
d_1	D_1	d_a min	D_a max	r_{as} max	(approx.)
379	321	368	336	1.5	6.64
435	325	428	334	2.5	44.0
600	321	584	336	4	162
605	365	598	378	4	157
515	385	500	404	3	73.8
495	405	488	412	3	27.9
540	403	526	414	3	59.2
650	430	635	443	3	145
539	441	532	460	2	24.2
695	565	682	582	4	99.5
659	561	653	571	2.5	32.9
660	570	657	575	2.5	58.1
810	570	790	590	4	210

Tapered Roller Thrust Bearings (Single Direction Type)

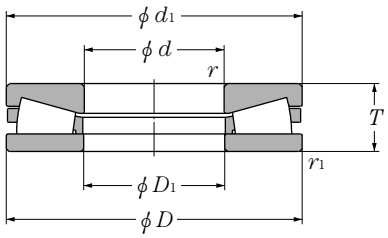

Drawing A

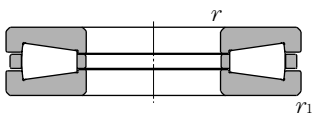

Drawing B

d 101.600～254.000mm

Boundary dimensions mm					Basic load ratings dynamic kN		dynamic kgf	static	Bearing numbers
d	D	T	$r_{s\,min}$ ❶	$r_{1s\,min}$ ❶	C_a	C_{oa}	C_a	C_{oa}	
101.600	215.900	46.038	3.3	3.3	700	2,730	71,000	279,000	＊CRT2010
	215.900	46.038	1.5	1.5	805	2,920	82,000	297,000	＊CRT2014
107.950	228.600	69.850	2	5.6	1,070	3,100	109,000	320,000	＊CRT2223
114.300	250.825	53.975	4.06	4.06	995	3,750	102,000	380,000	＊CRT2301
127.000	266.700	58.738	4	4	1,130	4,650	115,000	475,000	＊CRT2503
130	225	55	2.1	2.1	640	2,590	65,500	264,000	CRT2615
145	190	31	1	1	216	815	22,000	83,000	CRT2906
152.400	317.500	69.850	6.4	6.4	1,520	6,250	155,000	640,000	＊CRT3018
168.275	304.800	69.850	6.4	6.4	1,250	4,950	127,000	505,000	＊CRT3407
	304.800	69.850	6.4	6.4	1,350	5,100	138,000	520,000	＊CRT3409
170	320	100	6	6	1,620	6,400	166,000	650,000	CRT3410
174.625	358.775	82.550	6.4	6.4	1,720	7,050	175,000	720,000	＊CRT3503
177.800	368.300	82.550	8	8	2,190	8,900	223,000	910,000	＊CRT3617
203.200	419.100	92.075	9.7	9.7	2,400	10,200	244,000	1,040,000	＊CRT4108
	419.100	92.075	9.7	9.7	2,490	10,600	254,000	1,090,000	＊CRT4112
	419.100	120.650	9.7	9.7	2,240	9,450	229,000	965,000	＊CRT4105
220	370	90	4	4	1,690	7,250	172,000	740,000	CRT4405
227	325	50	2	2	610	2,720	62,000	277,000	CRT4502
228.600	482.600	104.775	11.2	11.2	3,450	15,600	350,000	1,590,000	＊CRT4604
	482.600	104.775	11.2	11.2	3,250	14,300	330,000	1,460,000	＊CRT4605
234.950	546.100	127.000	16	16	5,700	27,900	580,000	2,850,000	＊CRT4707V
254.000	539.750	117.475	11.2	11.2	3,850	17,100	395,000	1,740,000	＊CRT5103

❶ Minimal allowable dimension for chamfer dimension r or r_1.
Remarks: 1. Bearing numbers marked "＊" designate inch system bearings.

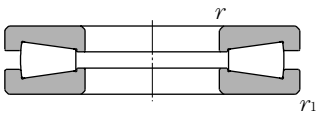

Drawing C

Drawing no.	Dimensions mm D_1	d_1	Mass kg (approx.)
B	101.6	215.9	9.06
A	102.591	215.138	8.23
B	107.95	228.6	14.0
B	114.3	250.825	13.9
B	128.6	265.1	17.7
A	130.3	225	9.14
B	147	188	2.30
B	152.4	317.5	28.5
B	168.275	304.8	24.6
A	168.275	302.5	22.2
A	170.5	320	39.4
B	174.625	358.775	39.9
B	177.8	368.3	45.0
A	203.2	416.7	60.9
B	203.2	419.1	64.9
B	203.2	419.1	79.8
A	221	369	39.2
A	227	325	13.3
B	230.6	480.6	101
A	230.6	480.6	93.2
C	234.95	546.1	160
A	254	539.75	140

Tapered Roller Thrust Bearings (Single Direction Type)

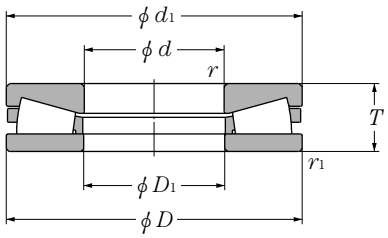

Drawing A

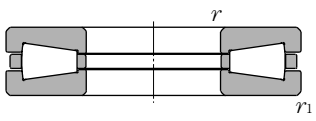

Drawing B

d 260～920mm

Boundary dimensions mm					Basic load ratings dynamic kN	Basic load ratings static kN	Basic load ratings dynamic kgf	Basic load ratings static kgf	Bearing numbers
d	D	T	$r_{s\,min}$ ❶	$r_{1s\,min}$ ❶	C_a	C_{oa}	C_a	C_{oa}	
260	360	60	2.1	2.1	890	3,950	91,000	400,000	**CRT5207**
279.400	603.250	136.525	11.2	11.2	5,100	23,300	520,000	2,380,000	**＊CRT5613**
290	395	80	3	3	1,330	5,150	136,000	525,000	**CRT5804**
320	580	155	7.5	7.5	4,800	18,900	490,000	1,920,000	**CRT6408**
	710	235	7.5	7.5	8,600	31,000	880,000	3,200,000	**CRT6401**
340	460	96	3	3	1,640	7,300	167,000	745,000	**CRT6803**
350	460	85	3	3	1,390	5,850	142,000	600,000	**CRT7012**
360	600	120	6.9	5.5	3,800	17,500	390,000	1,780,000	**CRT7207**
406.400	711.200	146.050	9.7	9.7	6,100	30,500	620,000	3,150,000	**＊CRT8101**
406.4	711.2	166.5	5	5	8,250	33,500	840,000	3,400,000	**CRT8104**
450	570	100	4	4	1,560	7,750	159,000	790,000	**CRT9002**
	750	145	8	8	6,350	31,500	645,000	3,200,000	**CRT9003**
508.000	990.600	196.850	12.7	12.7	12,100	62,500	1,230,000	6,400,000	**＊CRT10202**
600	745	105	5	5	2,530	13,600	258,000	1,390,000	**CRT12002**
920	1,120	150	7.5	7.5	5,500	32,500	560,000	3,350,000	**CRT18401**

❶ Minimal allowable dimension for chamfer dimension r or r_1.
Remarks: 1. Bearing numbers marked "＊" designate inch system bearings.

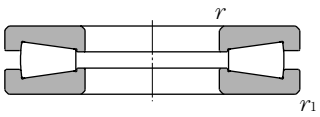

Drawing C

Drawing no.	Dimensions mm D_1	d_1	Mass kg (approx.)
A	260.3	360	18.3
B	279.4	603.25	205
A	291	395	27.8
B	320.5	580	179
A	320	708	465
A	340	460	49.9
A	351	450	37.3
A	366	620	136
B	406.4	711.2	245
A	409	709	301
A	452	570	60.3
B	450.5	750	257
B	508	990.6	701
A	600.5	745	101
A	922	1,118	295

Tapered Roller Thrust Bearings (Double Direction Type)

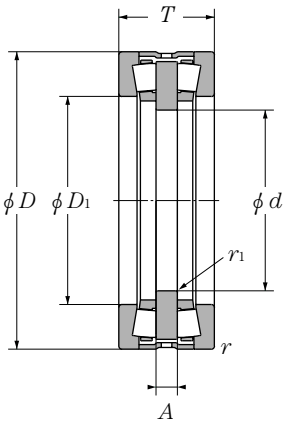

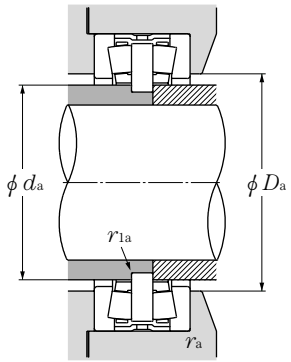

d 170～550mm

Boundary dimensions mm					Basic load ratings dynamic kN	static kgf	Bearing numbers	Abutment and fillet dimensions mm						Mass kg
d	D	T	$r_{s\,min}$ ❶	$r_{1s\,min}$ ❶	C_a	C_a		D_1	A	d_a	D_a	r_a	r_{1a}	(approx.)
170	240	84	2.5	1	365	37,000	**CRTD3401**	184	20	179	190	2	1	12
180	280	90	2	1	645	65,500	**CRTD3618**	196	20	189	202	2	1	20
200	560	138	3	4	1,630	166,000	**CRTD4013**	430	40	413	438	2.5	3	105
212	300	96	2	1	435	44,000	**CRTD4203**	236	22	228	242	2	1	19.5
220	340	130	2	1.5	860	88,000	**CRTD4401**	250	39	242	256	2	1.5	42.1
240	320	96	2	0.6	405	41,500	**CRTD4802**	256	22	246	262	2	1	21
	380	105	1.5	1.5	840	85,500	**CRTD4803**	270	27	267	274	1.5	1.5	41.5
250	360	96	1.5	0.6	635	64,500	**CRTD5007**	285	24	274	289	1.5	0.6	28
	380	100	2	1	905	92,000	**CRTD5005**	275	22	266	281	2	1	40
260	360	92	2	1	580	59,500	**CRTD5216**	285	20	272	291	2	1	26
	400	120	3	1.5	920	93,500	**CRTD5217**	290	25	276	298	2.5	1.5	51.5
300	420	100	2	2	880	89,500	**CRTD6001**	330	23	320	335	2	2	38
305	530	200	5	1.5	2,500	255,000	**CRTD6104**	345	56	332	357	4	1.5	165
320	440	108	3	2	980	100,000	**CRTD6406**	355	20	344	363	2.5	2	43
	470	130	3	2	1,390	142,000	**CRTD6404**	350	30	335	358	2.5	2	73
350	490	130	3	1.1	1,150	118,000	**CRTD7012**	390	30	375	398	2.5	1.5	72
380	560	130	3	2	1,630	166,000	**CRTD7612**	430	32	410	438	2.5	2	102
410	560	160	5	2	1,660	169,000	**CRTD8201**	440	40	428	446	4	2	111
420	620	170	3	1.1	2,190	223,000	**CRTD8403**	465	35	448	473	2.5	1	155
440	645	167	5	2	2,070	211,000	**CRTD8802**	500	50	470	495	2	2	176
470	720	200	4	4	3,450	355,000	**CRTD9408**	535	40	507	545	3	3	261
550	760	230	4	2	2,910	296,000	**CRTD11002**	610	50	577	622	4	2	296

❶ Minimum allowable dimension for chamfer dimension r or r_1.

Remarks: 1. C_a does not means allowable load ratings. Please contact **NTN** Engineering.

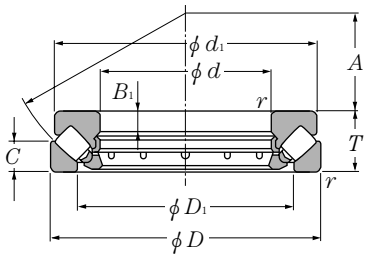

d 100～200mm

Boundary dimensions mm				Basic load ratings dynamic kN	Basic load ratings static kN	Basic load ratings dynamic kgf	Basic load ratings static kgf	Bearing numbers	Dimensions mm				
d	D	T	$r_{s\,min}$ ❶	C_a	C_{oa}	C_a	C_{oa}		D_1	d_1	B_1	C	A
100	170	42	1.5	345	1,160	35,500	118,000	29320	129	163	14	20.8	58
	210	67	3	685	2,130	69,500	217,000	29420	146	200	24	32	62
110	190	48	2	445	1,500	45,000	152,000	29322	143	182	16	23	64
	230	73	3	845	2,620	86,500	267,000	29422	162	220	26	35	69
120	210	54	2.1	535	1,770	54,500	181,000	29324	159	200	18	26	70
	250	78	4	975	3,050	99,000	310,000	29424	174	236	29	37	74
130	225	58	2.1	615	2,100	62,500	215,000	29326	171	215	19	28	76
	270	85	4	1,080	3,550	110,000	360,000	29426	189	255	31	41	81
140	240	60	2.1	685	2,360	70,000	241,000	29328	183	230	20	29	82
	280	85	4	1,110	3,750	114,000	385,000	29428	199	268	31	41	86
150	215	39	1.5	340	1,340	34,500	136,000	29230	178	208	14	19	82
	250	60	2.1	675	2,390	68,500	243,000	29330	194	240	20	29	87
	300	90	4	1,280	4,350	131,000	445,000	29430	214	285	32	44	92
160	225	39	1.5	360	1,460	36,500	149,000	29232	188	219	14	19	86
	270	67	3	820	2,860	84,000	292,000	29332	208	260	24	32	92
	320	95	5	1,500	5,150	153,000	525,000	29432	229	306	34	45	99
170	240	42	1.5	425	1,770	43,500	180,000	29234	198	233	15	20	92
	280	67	3	855	3,050	87,000	310,000	29334	216	270	23	32	96
	340	103	5	1,660	5,750	169,000	590,000	29434	243	324	37	50	104
180	250	42	1.5	450	1,920	45,500	196,000	29236	208	243	15	20	97
	300	73	3	995	3,600	102,000	365,000	29336	232	290	25	35	103
	360	109	5	1,840	6,200	188,000	635,000	29436	255	342	39	52	110
190	270	48	2	530	2,230	54,000	227,000	29238	223	262	15	24	104
	320	78	4	1,150	4,250	117,000	430,000	29338	246	308	27	38	110
	380	115	5	2,010	6,800	205,000	695,000	29438	271	360	41	55	117
200	280	48	2	535	2,300	54,500	234,000	29240	236	271	15	24	108
	340	85	4	1,280	4,600	131,000	470,000	29340	261	325	29	41	116
	400	122	5	2,230	7,650	228,000	780,000	29440	286	380	43	59	122

❶ Minimum allowable dimension for chamfer dimension r or r_1.

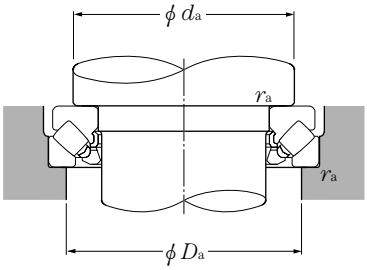

Equivalent bearing load
dynamic
$P_a = F_a + 1.2F_r$
static
$P_{oa} = F_a + 2.7F_r$
when $\frac{F_r}{F_a} \leqq 0.55$

Abutment and fillet dimensions mm			Mass kg
d_a min	D_a max	r_{as} max	(approx.)
130	150	1.5	3.94
150	175	2.5	11.5
145	165	2	5.78
165	190	2.5	15
160	180	2	7.92
180	205	3	18.6
170	195	2	9.76
195	225	3	23.7
185	205	2	11.4
205	235	3	25.2
179	196	1.5	4.56
195	215	2	12
220	250	3	30.5
189	206	1.5	4.88
210	235	2.5	15.9
230	265	4	37
201	218	1.5	6.02
220	245	2.5	16.6
245	285	4	45
211	228	1.5	6.27
235	260	2.5	21.2
260	300	4	52.9
225	245	2	8.8
250	275	3	26
275	320	4	62
235	255	2	9.14
265	295	3	31.9
290	335	4	73.3

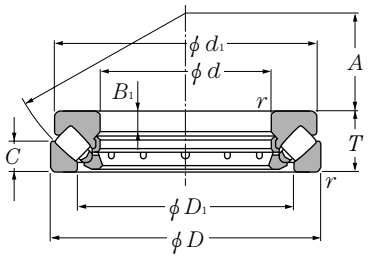

d 220～400mm

Boundary dimensions mm				Basic load ratings dynamic kN		Basic load ratings static kN		Bearing numbers	Dimensions mm				
d	D	T	$r_{s\,min}$ ❶	C_a	C_{oa}	C_a	C_{oa}		D_1	d_1	B_1	C	A
220	300	48	2	555	2,480	56,500	253,000	**29244**	254	292	15	24	117
	360	85	4	1,390	5,200	141,000	530,000	**29344**	280	345	29	41	125
	420	122	6	2,300	8,100	235,000	825,000	**29444**	308	400	43	58	132
240	340	60	2.1	825	3,600	84,000	365,000	**29248**	283	330	19	30	130
	380	85	4	1,380	5,250	140,000	535,000	**29348**	300	365	29	41	135
	440	122	6	2,400	8,700	245,000	885,000	**29448**	326	420	43	59	142
260	360	60	2.1	870	3,950	88,500	400,000	**29252**	302	350	19	30	139
	420	95	5	1,710	6,800	175,000	695,000	**29352**	329	405	32	45	148
	480	132	6	2,740	10,000	279,000	1,020,000	**29452**	357	460	48	64	154
280	380	60	2.1	875	4,050	89,000	415,000	**29256**	323	370	19	30	150
	440	95	5	1,800	7,250	184,000	740,000	**29356**	348	423	32	46	158
	520	145	6	3,350	12,400	340,000	1,270,000	**29456**	387	495	52	68	166
300	420	73	3	1,190	5,350	121,000	545,000	**29260**	353	405	21	38	162
	480	109	5	2,140	8,250	218,000	840,000	**29360**	379	460	37	50	168
	540	145	6	3,450	13,200	350,000	1,340,000	**29460**	402	515	52	70	175
320	440	73	3	1,260	5,800	128,000	595,000	**29264**	372	430	21	38	172
	500	109	5	2,220	8,800	226,000	895,000	**29364**	399	482	37	53	180
	580	155	7.5	3,700	14,200	375,000	1,440,000	**29464**	435	555	55	75	191
340	460	73	3	1,240	5,800	126,000	590,000	**29268**	395	445	21	37	183
	540	122	5	2,650	10,700	270,000	1,090,000	**29368**	428	520	41	59	192
	620	170	7.5	4,400	17,500	445,000	1,790,000	**29468**	462	590	61	82	201
360	500	85	4	1,510	7,050	154,000	720,000	**29272**	423	485	25	44	194
	560	122	5	2,710	11,100	276,000	1,130,000	**29372**	448	540	41	59	202
	640	170	7.5	4,500	18,500	460,000	1,890,000	**29472**	480	610	61	82	210
380	520	85	4	1,590	7,650	162,000	780,000	**29276**	441	505	27	42	202
	600	132	6	3,200	13,300	325,000	1,360,000	**29376**	477	580	44	63	216
	670	175	7.5	4,900	19,700	500,000	2,010,000	**29476**	504	640	63	85	230
400	540	85	4	1,620	7,950	165,000	810,000	**29280**	460	526	27	42	212
	620	132	6	3,400	14,500	345,000	1,480,000	**29380**	494	596	44	64	225
	710	185	7.5	5,450	22,100	555,000	2,250,000	**29480**	534	680	67	89	236

❶ Smallest allowable dimension for chamfer dimension r.

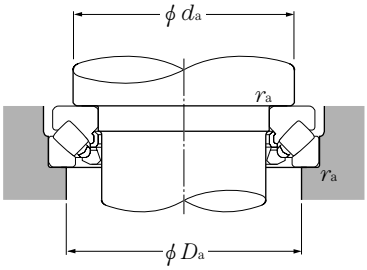

Equivalent bearing load
dynamic
$P_a = F_a + 1.2F_r$
static
$P_{oa} = F_a + 2.7F_r$
when $\frac{F_r}{F_a} \leqq 0.55$

Abutment and fillet dimensions mm			Mass kg
d_a min	D_a max	r_{as} max	(approx.)
260	275	2	9.94
285	315	3	34.5
310	355	5	77.8
285	305	2	17.5
300	330	3	36.6
330	375	5	82.6
305	325	2	18.6
330	365	4	52
360	405	5	108
325	345	2	19.8
350	390	4	54.6
390	440	5	140
355	380	2.5	30.9
380	420	4	75.8
410	460	5	147
375	400	2.5	33.5
400	440	4	79.9
435	495	6	181
395	420	2.5	34.4
430	470	4	107
465	530	6	230
420	455	3	50.5
450	495	4	112
485	550	6	240
440	475	3	53.4
480	525	5	143
510	575	6	267
460	490	3	55.8
500	550	5	148
540	610	6	321

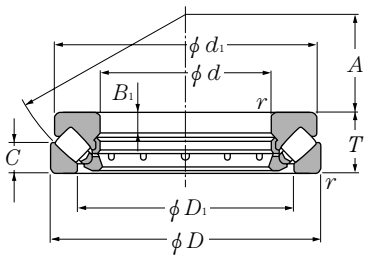

d 420～800mm

Boundary dimensions mm				Basic load ratings dynamic kN		static kN		Bearing numbers	Dimensions mm				
d	D	T	$r_{s\,min}$ ❶	C_a	C_{oa}	C_a	C_{oa}		D_1	d_1	B_1	C	A
420	580	95	5	2,100	10,400	214,000	1,060,000	29284	489	564	30	46	225
	650	140	6	3,600	15,500	365,000	1,580,000	29384	520	626	48	68	235
	730	185	7.5	5,500	22,800	560,000	2,330,000	29484	556	700	67	89	244
440	600	95	5	2,150	10,900	219,000	1,110,000	29288	508	585	30	49	235
	680	145	6	3,800	16,400	385,000	1,680,000	29388	548	655	49	70	245
	780	206	9.5	6,400	26,200	650,000	2,670,000	29488	588	745	74	100	260
460	620	95	5	2,150	11,000	219,000	1,120,000	29292	530	605	30	46	245
	710	150	6	4,200	18,500	430,000	1,880,000	29392	567	685	51	72	257
	800	206	9.5	6,600	27,900	670,000	2,840,000	29492	608	765	74	100	272
480	650	103	5	2,400	12,000	245,000	1,220,000	29296	556	635	33	55	259
	730	150	6	4,200	18,700	430,000	1,910,000	29396	590	705	51	72	270
	850	224	9.5	7,500	31,500	765,000	3,200,000	29496	638	810	81	108	280
500	670	103	5	2,540	13,000	259,000	1,330,000	292/500	574	654	33	55	268
	750	150	6	4,300	19,300	435,000	1,970,000	293/500	611	725	51	74	280
	870	224	9.5	7,850	33,000	805,000	3,350,000	294/500	661	830	81	107	290
530	710	109	5	2,720	14,000	278,000	1,430,000	292/530	610	692	39	55	288
	800	160	7.5	5,000	23,300	510,000	2,380,000	293/530	648	772	54	76	295
	920	236	9.5	8,650	36,000	880,000	3,700,000	294/530	697	880	86	115	308
560	750	115	5	3,200	16,600	325,000	1,700,000	292/560	642	732	38	61	302
	980	250	12	9,300	40,500	945,000	4,100,000	294/560	743	938	90	121	321
600	800	122	5	3,500	18,300	355,000	1,870,000	292/600	686	780	40	63	321
	1,030	258	12	10,200	44,500	1,040,000	4,550,000	294/600	785	978	90	125	360
630	850	132	6	4,300	22,800	435,000	2,330,000	292/630	717	822	44	70	338
	1,090	280	12	11,600	51,000	1,180,000	5,200,000	294/630	830	1,040	100	136	365
670	1,150	290	15	12,900	57,000	1,320,000	5,850,000	294/670	880	1,105	106	138	387
710	1,060	212	9.5	8,350	40,500	850,000	4,150,000	293/710	850	1,030	76	102	393
	1,220	308	15	14,100	63,500	1,440,000	6,450,000	294/710	925	1,165	112	150	415
750	1,280	315	15	15,700	69,000	1,600,000	7,000,000	294/750	983	1,220	116	152	436
800	1,360	335	15	17,000	79,000	1,730,000	8,050,000	294/800	1,040	1,300	120	162	462

❶ Smallest allowable dimension for chamfer dimension r.

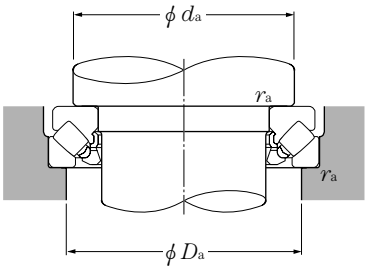

Equivalent bearing load
dynamic
$P_a = F_a + 1.2F_r$
static
$P_{oa} = F_a + 2.7F_r$
when $\frac{F_r}{F_a} \leqq 0.55$

Abutment and fillet dimensions mm			Mass kg
d_a min	D_a max	r_{as} max	(approx.)
490	525	4	76.6
525	575	5	172
560	630	6	333
510	545	4	79.6
550	600	5	195
595	670	8	428
530	570	4	82.8
575	630	5	221
615	690	8	443
555	595	4	98.6
595	650	5	228
645	730	8	552
575	615	4	102
615	670	5	235
670	750	8	569
610	650	4	122
655	710	6	288
715	790	8	669
640	690	4	144
755	835	10	815
690	735	4	171
800	885	10	897
725	780	5	213
845	935	10	1,110
895	990	12	1,280
870	930	8	669
950	1,050	12	1,520
995	1,105	12	1,690
1,060	1,175	12	2,040

Bearings for special applications

Contents

Split cylindrical roller bearings: Double–fractured ·····C- 2
Split spherical roller bearings: Double–fractured·····C- 3
Double–fractured split cylindrical roller bearings: Continuous casting equipment ·····C- 4
Cylindrical roller bearings with self-aligning rings: Continuous casting equipment ·····C- 5
Bearings for preparing rolls: Sendzimir rolling mills ·····C- 6
Enclosed–type tapered roller bearings for wheels: Sintering machines ·····C- 8
Cylindrical roller bearings: Chain conveyors ·····C- 9
Tapered roller thrust bearings: Screw down operations·····C-10
Tension leveler roll unit: Cartridge unit ·····C-14
Tension lever roll unit: Backup unit ·····C-15
Turn table bearings: 3–row cylindrical roller type ·····C-16
Sealed spherical roller bearings: Model WA ·····C-18
Spherical surface slide bearings ·····C-20

Bearings for special applications

Split Cylindrical Roller Bearings: Double–Fractured

- Since the inner ring, outer ring and cage are split in two parts, it is possible to mount the bearing in places where a united bearing is difficult or impossible to mount. (ie. Places where mounting from the shaft end is impossible, an obstacle exists on the shaft, or the shaft is very long.)
- Inspection and maintenance after mounting is easy.

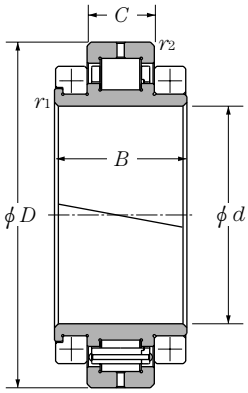

Drawing A
Fixed side

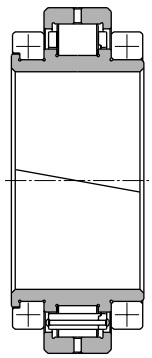

Drawing B
Free side

d 120～770mm

Boundary dimensions mm						Basic load ratings dynamic kN	static kN	dynamic kgf	static kgf	Bearing❶ numbers	Drawing no.
d	D	B	C	r_1	r_2	C_r	C_{or}	C_r	C_{or}		
120	R254	125	60	C4	4	450	510	46,000	52,000	＊**RE2436** ＊**RE2437**	B A
127	254	114.3	63.5	C5	C2	555	720	56,500	73,500	**RE2512**	A
160	240	76	38	C3	C3	238	340	24,200	35,000	**RE3220** **RE3221**	A B
164	240	76	38	C3	C3	238	340	24,200	35,000	**RE3308** **RE3309**	A B
170	R340	120	56	C3.5	3.5	435	565	44,500	57,500	＊**RE3420** ＊**RE3421**	A B
180	285.75	109	55.5	C3.5	C3.5	415	580	42,500	59,000	**RE3617**	A
190	290	92	46	C3.5	C3.5	350	510	36,500	52,000	**RE3812** **RE3813**	A B
200	311.15	109.5	60.3	C3.2	C3.2	480	760	49,000	77,500	**RE4022**	A
210	360	92	46	C3	C3	370	595	37,500	60,500	**RE4206** **RE4207**	A B
230	360	92	46	C3	C3	350	550	35,500	56,500	**RE4604** **RE4605**	A B
235	360	92	46	C3	C3	350	550	35,500	56,500	**RE4702** **RE4703**	A B
260	360	92	46	C3	C3	350	550	35,500	56,500	**RE5209** **RE5210**	A B
280	400	92	48	C3	C3	460	755	47,000	77,000	**RE5606** **RE5607**	B A
320	622.3	272	160.4	C12	C6	2,900	4,250	295,000	435,000	**RE6405**	A
335	480	115	56	C3	C3	545	955	56,000	97,500	**RE6702** **RE6703**	A B
360	R600	200	116	C6	6	1,940	3,250	198,000	330,000	＊**RE7203**	B
460	740	294	170	C4	C4	3,650	6,150	370,000	625,000	**RE9208**	B
500	850.9	360	210	C12	C6	5,250	9,050	535,000	525,000	**RE10013**	B
575	800	180	90	C3	C3	1,370	2,570	140,000	262,000	**RE11501** **RE11502**	A B
640	900	200	103	C3	C3	1,650	3,150	168,000	325,000	**RE12801** **RE12802**	A B
670	900	200	103	C3	C3	1,650	3,150	168,000	325,000	**RE13405** **RE13406**	A B
770	1,070	300	180	C2.5	C6	5,300	12,000	540,000	1,230,000	**RE15404** **RE15405**	A B

❶ The marked "＊" bearings has a spherical surface of outer rings outside dia.
Remarks: 1. The above drawings are typical examples. Please contact **NTN** Engineering.

Split Spherical Roller Bearings: Double–Fractured

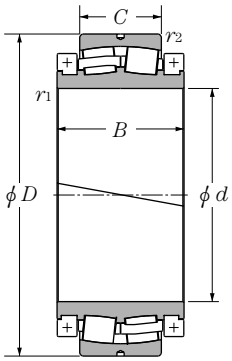

Drawing A

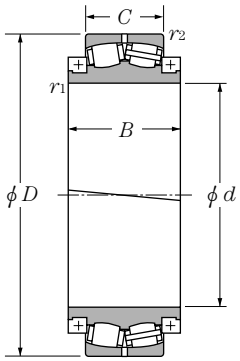

Drawing B

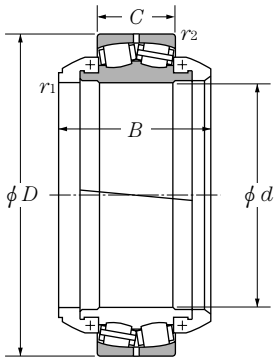

Drawing C

d 150～1,400mm

Boundary dimensions mm						Basic load ratings dynamic kN	static kN	dynamic kgf	static kgf	Bearing numbers [1]	Drawing no.
d	D	B	C	r_1	r_2	C_r	C_{or}	C_r	C_{or}		
150	260	121	67	2.1	2.1	420	720	43,000	73,500	**2PE3012**	A
190	290	150	90	2.1	2.1	785	1,440	80,000	147,000	**2PE3801**	A
200	340	152	90	3	3	935	1,620	95,000	165,000	**2PE4002**	A
240	400	173	104	4	4	1,070	1,990	109,000	203,000	**2PE4802**	A
315.9	530	210	133	5	5	2,130	4,150	218,000	420,000	**2PE6301**	A
320	480	226	121	7.5	4	1,590	2,930	163,000	299,000	**2PE6401**	A
360	540	212	134	3	5	2,270	4,350	231,000	445,000	**2PE7202**	A
505	750	248	140	5	5	2,680	6,200	273,000	635,000	**2PE10101**	A
530	750	248	140	5	5	2,680	6,200	273,000	633,000	**2PE10601**	A
850	1,280	375	249	12	12	8,800	19,900	895,000	2,020,000	**2PE17009**	A
1 120	1,540	525	355	7.5	7.5	14,200	43,500	1,450,000	4,400,000	**2PE22401**	B
1 200	1,700	790	410	—	9.5	17,200	44,000	1,750,000	4,500,000	**2PE24004**	C
1 200	1,700	695	410	—	9.5	15,600	44,000	1,590,000	4,500,000	**2PE24005**	C
1 400	1,900	880	530	—	12	22,900	65,500	2,340,000	6,650,000	**2PE28001**	C

Double–Fractured Split Cylindrical Roller Bearings: Continuous Casting Equipment

NTN

- These bearings are designed to be a full complement roller type and have high rating load for heavy loads, ultra low speed rotation and space-saving.
- These bearings provide a multi-seal with a labyrinth ring, seal ring and special rubber seal to prevent water from invading.
- The clamping ring of the inner ring is not needed anymore and the structure of direct clamping is applied to make a compact bearing.
- Bearings have a self-aligning nature due to the roll deflection since the outer ring outside diameter and the housing inner diameter are spherical.
- Application of a water cooling jacket type housing controls rising bearing temperatures.

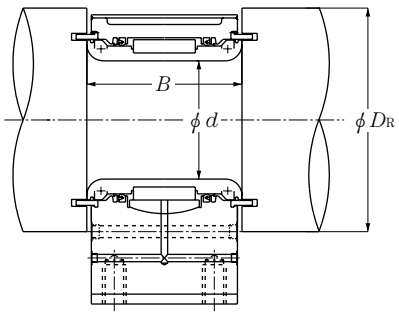

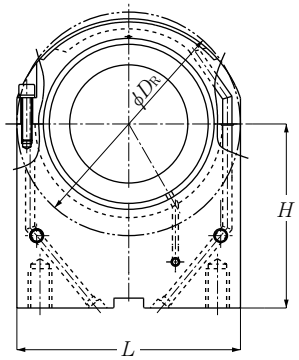

d 100～230mm

Boundary dimensions mm					Basic load ratings dynamic kN		dynamic kgf	static	Bearing numbers	Housing No.
d	B	H	L	D_R	C_r	C_{or}	C_r	C_{or}		
100	154	145	210	210	355	790	36,000	80,500	**RE2038V**	**SS2020**
	169	132	220	225	475	950	48,500	96,500	**RE2039V**	**SS2021**
110	154	150	230	230	425	1,040	43,500	106,000	**RE2224V**	**SS2228**
	154	180	230	230	390	930	40,000	94,500	**RE2225V**	**SS2230**
		155	230	225						**SS2234**
115	173	220	240	240	505	940	51,500	95,500	**RE2306V**	**SS2304**
120	151	190	240	250	395	970	40,000	99,000	**RE2439V**	**SS2420**
130	154	190	270	270	430	1,110	43,500	113,000	**RE2628**	**SS2637**
140	179	245	270	270	600	1,240	61,500	126,000	**RE2827V**	**SS2835**
	191	250	265	265	525	1,280	53,500	131,000	**RE2824V**	**SS2825**
145	196	260	280	280	630	1,440	64,500	147,000	**RE2906V**	**SS2908**
	208	270	295	295	765	1,780	78,000	182,000	**RE2907V**	**SS2907**
150	169	180	265	300	695	1,700	70,500	173,000	**RE3036V**	**SS3043**
165	228	280	320	320	930	2,210	95,000	225,000	**RE3311V**	**SS3303**
180	169	217.5	335	335	815	2,010	83,000	205,000	**RE3621V**	**SS3616**
	235	280	340	340	1,030	2,580	106,000	263,000	**RE3620V**	**SS3415**
190	233	280	370	370	1,320	3,100	134,000	320,000	**RE3815V**	**SS3804**
230	239	300	450	450	1,590	3,700	162,000	380,000	**RE4606**	**SS4601**

Cylindrical Roller Bearings With Self-Aligning Rings: Continuous Casting Equipment

NTN

- These bearings are designed to be a full complement roller type and have high rating load.
- Bearings have a self-aligning nature since the outer ring outside surface and aligning ring inside surface are spherical.

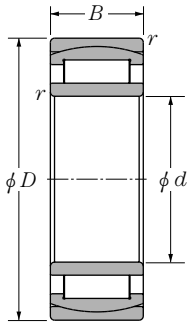

d 55～200mm

Boundary dimensions mm				Basic load ratings dynamic kN	static kN	dynamic kgf	static kgf	Bearing numbers
d	D	B	$r_{s\,min}$ ❶	C_r	C_{or}	C_r	C_{or}	
55	90	32	1.1	85	203	8,700	20,700	R11A11V
	100	25	1.5	94.5	146	9,650	14,900	R11A12V
75	130	31	1.5	146	236	14,900	24,100	R1564V
110	170	60	2	297	720	30,500	73,000	R2260V
	180	56	2	325	635	33,000	65,000	R2252V
120	200	80	2	450	980	46,000	100,000	R2481V
130	200	69	2	405	935	41,500	95,500	R2674V
	210	80	2	495	1,090	50,500	112,000	R2677V
140	210	69	2	420	990	42,500	101,000	R2858V
	225	85	2.1	545	1,230	56,000	125,000	R2859V
150	250	100	2.1	710	1,620	72,500	165,000	R3056V
160	270	109	2.1	855	1,830	87,500	186,000	R3261V
170	260	90	2.1	635	1,510	65,000	154,000	R3444V
180	280	100	2.1	785	1,870	80,500	191,000	R3646V
200	340	112	3	1 160	2,470	119,000	252,000	R4051V

❶ Smallest allowable dimension for chamfer dimension r.

Bearings for Preparing Rolls: Sendzimir Rolling Mills

- Since bearings are directly used in preparing rolls, the thickness of the outer ring is designed to be thicker than regular bearings.
- Since high accuracy under heavy loads is required, these bearings are designed to have a capacity for heavy loads and high accuracy.
- Several bearings are assembled on one shaft for operation, and the mutual difference of assembled thickness (Dimension H) of bearings on the same shaft is very minimal.
- When the outer ring outside surface is worn, it is possible to recycle it by grinding it to a certain level.

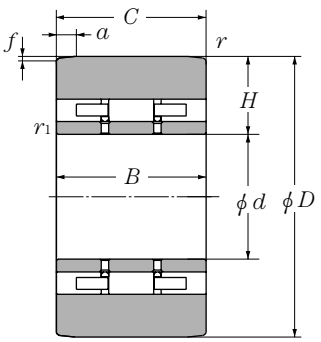

Drawing A

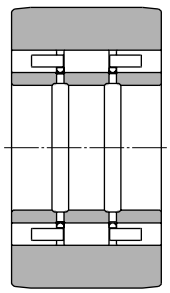

Drawing B

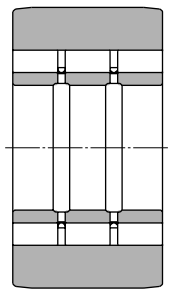

Drawing C

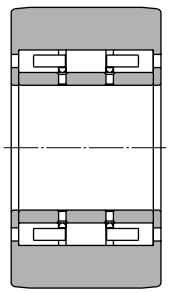

Drawing D

d 70～180mm

Boundary dimensions mm						Basic load ratings dynamic kN		static kgf		Bearing numbers	Drawing no.
d	D	B	C	$r_{s\,min}$ ❶	$r_{ls\,min}$ ❶	C_r	C_{or}	C_r	C_{or}		
70	160	90	90	1.5	0.6	455	855	46,500	87,000	**3RCS1414VUP**	C
	160	90	90	1.5	0.6	355	605	36,000	61,500	**3RCS1418UP**	B
90	220	96	94	3.0	1.1	470	695	48,000	71,000	**2R1840LLUP-1**	F
	220	120	120	2.0	0.3	775	1,510	79,000	154,000	**3R1827VUP**	E
	220	120	120	2.0	1.5	650	1,150	66,000	118,000	**3R1829UP**	D
	200	130	130	2.0	1.5	675	1,260	69,000	128,000	**3R1826UP**	D
100	255	120	120	1.5	1.0	715	1,350	73,000	138,000	**3RCS2035UP**	A
130	300	160	159.5	1.5	2.0	1,480	2,700	151,000	275,000	**3RCS2659UPV1**	A
	300	172.6	172.6	1.5	2.0	1,580	2,930	161,000	299,000	**3RCS2629UP**	A
180	406.4	171.04	171.04	2.5	4.0	2,060	3,800	210,000	390,000	**3RCS3615UP**	B
	406.4	224	224	1.45	4.0	2,350	4,500	240,000	460,000	**3RCS3618UP**	B

❶ Minimal allowable dimension for chamfer dimension r or r_1.

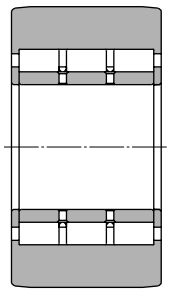

Drawing E

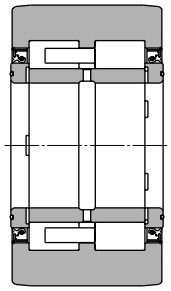

Drawing F

Sloping outer ring		Assembled thickness	Necessary number	Mass
mm		mm		kg
a	f	H	(P/C)	(approx.)
6	0.035	44.981 (±0.010)	32	10.7
6	0.035	44.981 (±0.010)	32	10.7
21	0.5	64.980 (±0.008)	64	21.7
6	0.035	64.978 (±0.008)	32	27.6
20.6	0.12	64.973 (0～−0.010)	40	27.5
6	0.1	64.960 (±0.008)	40	29.8
10	0.1	62.474 (0.010～0)	32	28.0
10	0.1	84.954 (±0.008)	40	67.4
10	0.1	84.954 (±0.008)	40	73.0
25	0.15	113.150 (±0.010)	56	132
25	0.15	113.150 (±0.010)	40	170

Enclosed–Type Tapered Roller Bearings for Wheels: Sintering Machines

NTN

- The double lip contact seal, which has a tight seal, is installed with the bearing side face to prevent dust from entering the bearings.
- Greasing the bearings is possible when a notch is positioned at the central part of inner ring.

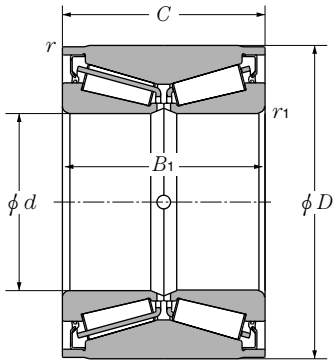

d 85～130mm

Boundary dimensions mm						Basic load ratings dynamic kN	static kN	dynamic kgf	static kgf	Bearing numbers
d	D	B_1	C	r_{smin} ❶	r_{1smin} ❶	C_r	C_{or}	C_r	C_{or}	
85	180	115	115	2.5	0.6	440	715	45,000	73,000	**CRI-1760LL**
95	180	100	100	3.0	1.0	530	835	54,500	85,500	**CRI-1959LL ＊**
100	180	100	100	2.5	0.8	440	675	45,000	68,500	**CRI-2070LL**
110	200	100	100	3.0	1.0	605	965	61,500	98,500	**CRI-2272LL**
130	230	138	138	3.0	0.3	820	1,660	83,500	169,000	**CRI-2666LL**

❶ Minimal allowable dimension for chamfer dimension r or r_1.
Remarks: 1. The marked "＊" bearings are not prepared with oil holes.

Cylindrical Roller Bearings: Chain Conveyors

NTN

- Since the outer ring directly supports heavy loads, the thickness of outer ring is designed to be thicker than regular bearings.
- For operation under heavy loads and extremely low speed rotation, these bearings are designed to be a full complement roller type and have high loads capacity.
- To prevent foreign matter from entering the bearing, a labyrinth structure is applied, which has a narrower clearance between outer ring and rib ring.

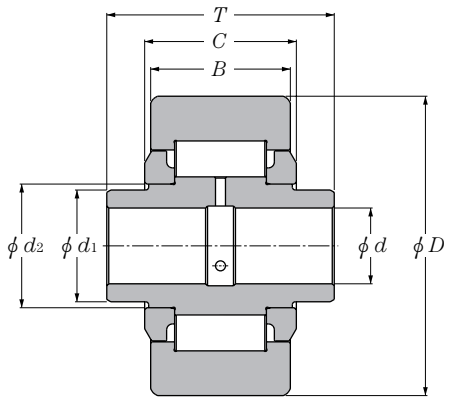

d 28.3～56mm

Boundary dimensions mm							Basic load ratings dynamic kN	Basic load ratings static kN	Basic load ratings dynamic kgf	Basic load ratings static kgf	Bearing numbers
d	d_1	d_2	D	B	C	T	C	C_o	C	C_o	
28.3	44.05	47	125	55	62	94	197	241	20,100	24,500	**R06A31V**
38.4	60	66	150	90	99	138	390	585	40,000	59,500	**R08A31V**
38.7	56	56	150	70	75	112	315	420	32,500	42,500	**R08A24V**
41.75	64.16	71	175	80	85	125	395	575	40,500	59,000	**R08A02V**
45	73	73	150	60	60	60	278	405	28,300	41,000	**R09A20V**
46	73	73	150	60	60	60	278	405	28,300	41,000	**R09A21V**
50	72	72	156	60	70	70	280	355	28,600	36,500	**R1099V**
56	74	74	160	51	55	49	261	310	26,600	31,500	**R11A01V**
	73	73	150	60	60	60	278	405	28,300	41,000	**R11A13V**

Tapered Roller Thrust Bearings: Screw Down Operations

- These bearings are designed to be a full complement roller type and have high static rating load for large axial load applications.
- Inner ring surface is spherical (convex or concave) to allow its circle center to meet the tip of the pressing screw.
- For hoisting, bearings are designed to have a hole or bushing at the center of the inner ring, and a bushing on the outer ring.

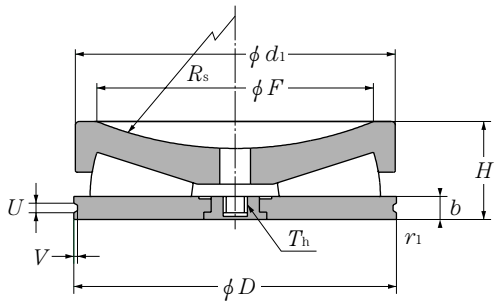

D 149.225～641.350mm

Boundary dimensions mm					Basic load ratings static kN	Basic load ratings static kgf	Bearing numbers
D	d_1	H	F	$r_{1s\,min}$ ❶	C_{oa}	C_{oa}	
149.225	146.900	47.625	127.000	1.6	2,280	233,000	**CRT0402V**
174.625	172.300	52.375	152.400	1.6	3,300	335,000	**CRT0503V**
203.200	200.800	65.075	177.800	1.6	4,550	465,000	**CRT0607V**
266.700	264.300	80.950	228.600	1.6	7,750	790,000	**CRT0701V**
320.675	318.300	95.250	279.400	1.6	11,800	1,200,000	**CRT0814V**
377.825	375.500	111.125	330.200	1.6	16,300	1,660,000	**CRT0908V**
409.575	407.200	122.225	355.600	3.2	19,300	1,960,000	**CRT1006V**
438.150	435.800	130.175	381.000	3.2	21,600	2,210,000	**CRT1104V**
495.300	492.900	146.050	431.800	3.2	27,300	2,780,000	**CRT1209V**
495.300	492.900	146.050	431.800	3.2	32,000	3,250,000	**CRT1212V**
523.875	521.500	152.400	457.200	3.2	32,000	3,300,000	**CRT1409V**
554.000	555.000	190.500	465.430	1.7	36,000	3,700,000	**CRT1206V**
555.625	553.300	165.100	482.600	3.2	36,000	3,650,000	**CRT1516V**
581.025	578.700	168.275	508.000	3.2	38,500	3,950,000	**CRT1610V**
609.600	607.200	177.800	533.400	3.2	44,000	4,500,000	**CRT1806V**
641.350	639.000	184.150	558.800	3.2	49,000	4,950,000	**CRT1807V**

❶ Smallest allowable dimension for chamfer dimension r_1.

Dimensions					Mass
mm					kg
R_S	b	U	V	T_h	(approx.)
228.6	12.7	4.7	1.2	M12	4.4
228.6	12.7	4.7	1.2	M12	6.7
254	15.875	6.4	1.2	M12	11
304.8	19.05	7.9	2	M20	24.1
381	22.225	10.3	2.4	M20	41.3
457.2	25.4	10.3	2.4	M24	73.7
508	28.575	10.3	2.4	M24	87.2
508	31.75	13.5	3.2	M24	105
558.8	34.925	13.5	3.2	M24	150
1,270	34.925	13.5	3.2	M24	150
635	34.925	13.5	3.2	M24	175
1,270	50	9.5	6	M24	245
635	38.1	13.5	3.2	M24	214
711.2	38.1	13.5	3.2	M24	238
762	38.1	13.5	3.2	M24	277
762	38.1	13.5	3.2	M24	317

Tapered Roller Thrust Bearings: Screw Down Operations

- These bearings are designed to be a full complement roller type and have high static rating load for large axial load applications.
- Inner ring surface is spherical (convex or concave) to allow its circle center to meet the tip of the pressing screw.
- For hoisting, bearings are designed to have a hole or bushing at the center of the inner ring, and a bushing on the outer ring.

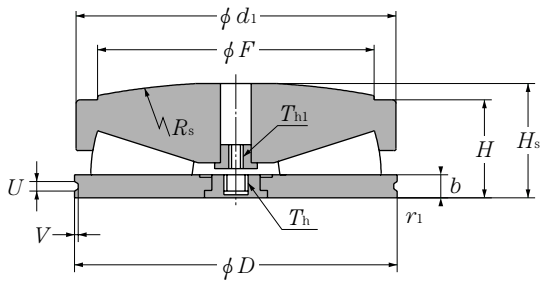

D 149.225～641.350mm

Boundary dimensions mm					Basic load ratings static kN	Basic load ratings static kgf	Bearing numbers
D	d_1	H	F	$r_{1s\,min}$ ❶	C_{oa}	C_{oa}	
149.225	146.900	80	127.000	1.6	2,280	233,000	**CRT0401V**
174.625	172.300	61.392	152.400	1.6	3,300	335,000	**CRT0504V**
203.200	200.800	75	177.800	1.6	4,650	475,000	**CRT0606V**
266.700	264.300	94.412	228.600	1.6	7,750	790,000	**CRT0505V**
320.675	318.300	110.973	279.400	1.6	11,800	1,200,000	**CRT0811V**
377.825	375.500	129.007	330.200	1.6	16,300	1,660,000	**CRT0909V**
409.575	407.200	140.767	355.600	3.2	19,300	1,960,000	**CRT1007V**
438.150	435.800	150.673	381.000	3.2	21,600	2,210,000	**CRT1105V**
482.600	480.212	145.542	419.100	3.2	27,200	2,770,000	**CRT1307V**
495.300	492.900	170.612	431.800	3.2	32,000	3,250,000	**CRT1211V**
523.875	521.500	174.35	457.200	3.2	32,500	3,350,000	**CRT1412V**
533.400	533.400	177.8	457.200	1.6	33,500	3,400,000	**CRT1411V**
555.625	553.300	190.856	482.600	3.2	36,000	3,650,000	**CRT1517V**
581.025	578.700	193.78	508.000	3.2	39,000	4,000,000	**CRT1214V**
581.225	578.700	193.777	508.000	3.2	38,500	3,950,000	**CRT1601V**
609.600	607.240	202.167	533.400	3.2	44,500	4,550,000	**CRT1812V**
641.350	639.000	212.674	558.800	3.2	49,000	4,950,000	**CRT1808V**

❶ Smallest allowable dimension for chamfer dimension r_1.

Dimensions mm							Mass kg
R_S	H_s	b	U	V	T_h	T_{h1} ❷	(approx.)
457.2	47.625	12.7	4.7	1.2	M12	—	6.6
457.2	52.375	12.7	4.7	1.2	M12	—	10.1
508	65.075	15.875	6.4	1.2	M12	M16	17
609.6	80.950	19.05	7.9	2	M20	—	36.2
762	95.250	22.225	10.3	2.4	M20	—	61.3
914.4	111.125	25.4	10.3	2.4	M24	—	98.8
1,016	122.225	28.575	10.3	2.4	M24	—	127
1,016	130.175	31.75	13.5	3.2	M24	—	155
1,905	130.175	38.1	13.5	3.2	M24	—	182
1,066.8	146.050	34.925	13.5	3.2	M24	—	215
1,270	152.400	34.925	13.49	3.18	M24	—	259
1,981.2	161.925	31.75	9.5	9.5	M24	—	271
1,270	165.100	38.1	13.5	3.2	M24	—	316
1,320.8	166.880	38.1	13.5	6	M24	M42	350
1,422.4	168.275	38.1	13.5	3.2	M24	—	350
1,524	177.800	38.1	13.5	3.2	M30	M42	388
1,524	184.150	38.1	13.5	3.2	M24	—	469

❷ "—" means that is not prepared with a bush.

Tension Leveler Roll Unit: Cartridge Unit

- This unit has a precision small diameter and a long scaled roll, with the surface roughness of the roll designed to be low.
- Angular ball bearings are assembled in multiple rows in the cartridge to obtain high load capacity in both axial directions and at high speed.
- This unit has established both low torque operation and tight sealing by a labyrinth structure and low-contact seals.

Cartrige Unit

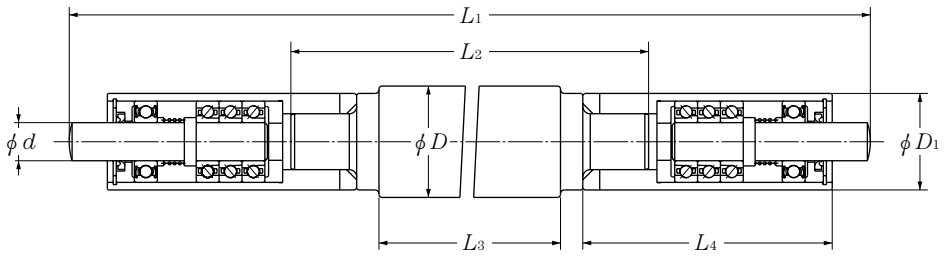

d 8～15mm

Bearing numbers	Boundary dimensions mm							Allowable axiale load	
								kN	kgf
	d	D	L_1	L_2	L_3	D_1	L_4		
CU8A01W+WK30/150	8	30	1,716	1,552	1,500	26	92	1.85	189
CU8A05W+WK50/185	8	50	2,066	1,902	1,850	26	92	1.85	189
CU8A05W+IM38/185	8	38	2,066	1,902	1,850	26	92	1.85	189
CU10B01W+WK25/220	10	25	2,433.5	2,280	2,200	24	80	0.715	73
CU10B01W+WK20/180	10	20	2,033.5	1,880	1,800	24	80	0.715	73
CU12B04W+WK40/150	12	40	1,716	1,566	1,500	32	92	2.02	206
CU12B07W+WK30/220	12	30	2,433.5	2,288	2,200	28	85	1.49	151
CU12B07W+IM38/180	12	38	2,033.5	1,888	1,800	28	85	1.49	151
CU12B08W+WK40/210	12	40	2,332	2,170	2,100	38	100	2.02	206
CU15A04W+IM60/220	15	60	2,433.5	2,270	2,200	38	94	3.78	380

Tension Lever Roll Unit: Backup Unit

NTN

- This unit has established both low torque operation and tight sealing by a labyrinth structure and low-contact seals.
- When further low torque is requested, the roll unit (Model BUB), which uses only the deep groove ball bearings, is available.
- Since the unit is used as a backup roll, the accuracy and its surface roughness are designed to be low.

Backup Unit

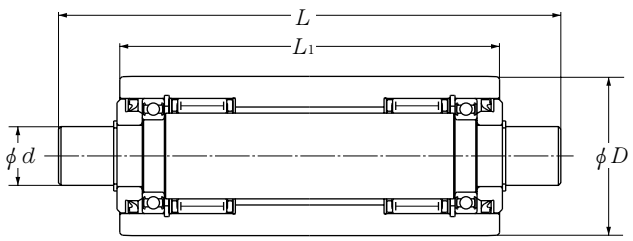

Type NKZ

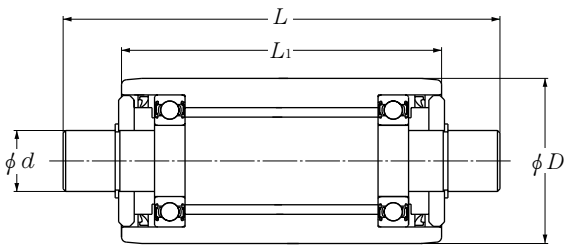

Type BUB

d 13～70mm

Bearing numbers	Boundary dimensions mm				Basic load ratings dynamic kN	static kN	dynamic kgf	static kgf	Mass kg
	d	D	L	L_1	C_r	C_{or}	C_r	C_{or}	(approx.)
NKZ 13×34×190-2	13	34	190	150	42	68	4,300	6,900	1
NKZ 16×38×192	16	38	192	170	35.5	55.5	3,600	5,650	1.4
NKZ 20×50×153-1	20	50	153	115	77.5	116	7,900	11,900	1.9
BUB 24×63.5×150-01	24	63.5	190	140	26.6	23.4	2,710	2,390	2.4
NKZ 24×65×205-6	24	65	205	155	82.5	122	8,450	12,500	3.9
NKZ 24×65×294	24	65	294	244	98	153	10,000	15,600	5.8
NKZ 24×65×314-4	24	65	314	275	84	150	8,600	15,300	6.5
BUB 24×65×320-03	24	65	320	274	19.2	14.8	1,950	1,510	6.5
NKZ 26×75×208-5	26	75	208	160	112	163	11,400	16,700	5.1
NKZ 28×75×150	28	75	150	108	112	163	11,400	16,700	3.6
NKZ 30×65×196	30	65	196	146	114	186	11,600	18,900	3.8
NKZ 30×75×150-24	30	75	150	110	125	187	12,700	19,000	3.7
NKZ 30×75×230-19	30	75	230	180	151	228	15,400	23,200	5.8
NKZ 30×75×326-12	30	75	326	276	151	228	15,400	23,200	8.5
NKZ 40×90×195	40	90	195	145	128	214	13,000	21,900	7
NKZ 70×150×345-4	70	150	345	250	515	905	52,500	92,500	34.5

Turn Table Bearings: 3–Row Cylindrical Roller Type

- These are compound type bearings which unite the double row thrust roller bearing and the radial roller bearing.
- These bearings are designed so that rollers in each row support axial and moment loads respectively, and high rigidity and long life can be obtained since the rolling parts make line contact.
- They are suitable for tunnel excavating machines or cranes with frequent turns.

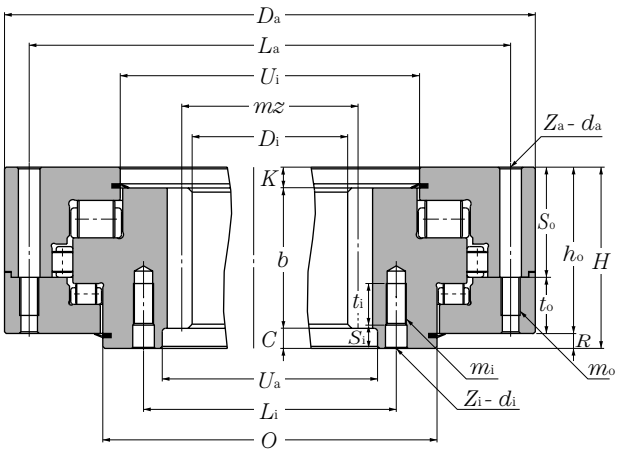

Drawing A

D_i 1,104～4,000mm

Boundary dimensions			Gear spec				Setting holes (inner ring)						Setting holes (outer ring)					
			module	number of gear teeth				z_i						z_a				
D_i	D_a	H	mz	m	z	b	L_i	(n)	d_i	S_i	m_i	t_i	L_a	(n)	d_a	s_o	t_o	m_o
1,104	1,510	175	1,128	12	94	140	1,230	36	ϕ 26	30	M24X3	45	1,460	36	ϕ 26	108	52	M24X3
1,400	1,850	220	1,428	14	102	120	1,520	48	ϕ 26	30	M24X3	50	1,795	48	ϕ 26	—	—	—
1,620	2,180	260	1,656	18	92	180	1,800	40	ϕ 33	30	M30X3.5	60	2,115	40❶	ϕ 33	—	—	—
2,172	2,660	230	2,196	12	183	170	2,300	48	ϕ 33	35	M30X3.5	60	2,595	48	ϕ 33	—	—	—
2,784	3,305	240	2,808	12	234	140	2,910	42	ϕ 33	30	M30X3.5	55	3,240	42	ϕ 33	—	—	—
4,000	4,700	348	4,032	16	252	210	4,175	88	ϕ 42	50	M39X4	70	4,615	88	ϕ 42	226	80	M39X4

❶ Disparity positioned

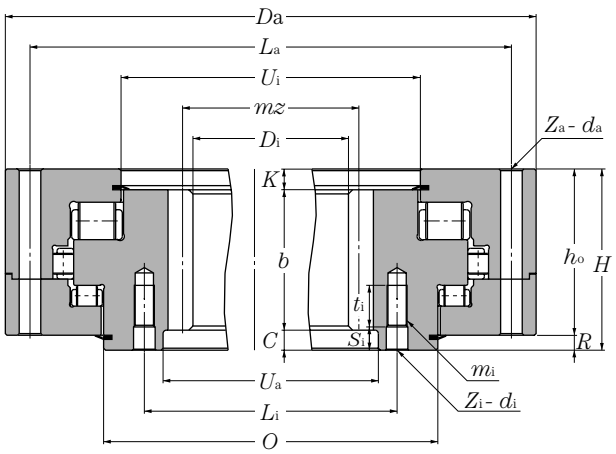

Drawing B

Unit mm

Bearing numbers	Drawing no.	Dimensions						Basic load ratings						Mass
								static kN			static Tonf			
		O	U_i	U_a	R	K	C	main thrust line	sub thrust line	radial line	main thrust line	sub thrust line	radial line	kg (approx.)
K2N-RTD22602PX1	A	1,306	1,284	1,166	15	15	20	11,500	6,700	1,410	1,170	680	143	930
K2N-RTD28601PX1	B	1,618	1,576	1,475	20	15	85	20,500	10,800	2,200	2,100	1,110	225	1,550
K2N-RTD33102PX1	B	1,902	1,844	1,710	20	25	55	28,900	14,600	3,050	2,950	1,490	310	2,650
K2N-RTD43902PX1	B	2,391	2,364	2,235	30	20	40	27,500	18,600	2,280	2,800	1,900	233	2,600
K2N-RTD56205PX1	B	3,034	3,000	2,846	20	15	85	36,500	22,000	4,500	3,700	2,240	460	3,850
K2N-RTD80602PX1	A	4,321	4,219	4,085	20	52	86	114,000	50,500	17,000	11,600	5,150	1,740	10,300

Sealed Spherical Roller Bearings: Model WA

- Special contact type rubber seal prevents foreign matter from entering the bearings.
- Compact design enables bearings to be mounted with the standard type of plummer blocks (SN5, SN2).
- Greasing bearings is possible since lubrication grooves and holes are provided on the outer ring.
- Bearings are prelubricated with grease and can be directly mounted on machines.

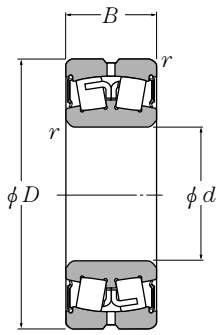

Cylindrical bore

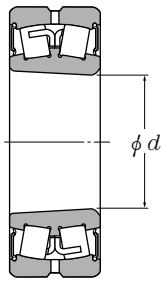

Tapered bore
taper 1:12

d 60～160mm

Boundary dimensions mm				Basic load ratings dynamic kN	static kN	dynamic kgf	static kgf	Bearing numbers	
d	D	B	$r_{s\,min}$ ❶	C_r	C_{or}	C_r	C_{or}	Cylindrical bore	Tapered bore ❷
60	110	36	1.5	115	147	11,700	15,000	LH-WA22212BLLS	LH-WA22212BLLSK
65	120	39	1.5	143	179	14,600	18,300	LH-WA22213BLLS	LH-WA22213BLLSK
70	125	39	1.5	154	201	15,700	20,500	LH-WA22214BLLS	LH-WA22214BLLSK
75	130	39	1.5	166	223	16,900	22,800	LH-WA22215BLLS	LH-WA22215BLLSK
80	140	41	2	179	239	18,300	24,400	LH-WA22216BLLS	LH-WA22216BLLSK
85	150	44	2	206	272	21,000	27,800	LH-WA22217BLLS	LH-WA22217BLLSK
90	160	50.4	2	256	345	26,200	35,000	LH-WA22218BLLS	LH-WA22218BLLSK
95	170	51	2.1	294	390	30,000	39,500	WA22219BLLS	WA22219BLLSK
100	180	60.3	2.1	315	415	32,000	42,500	WA22220BLLS	WA22220BLLSK
110	200	69.8	2.1	410	570	42,000	58,000	WA22222BLLS	WA22222BLLSK
120	215	76	2.1	485	700	49,500	71,500	WA22224BLLS	WA22224BLLSK
130	230	80	3	570	790	58,000	80,500	WA22226BLLS	WA22226BLLSK
140	250	88	3	685	975	70,000	99,500	WA22228BLLS	WA22228BLLSK
150	270	96	3	775	1,160	79,000	119,000	WA22230BLLS	WA22230BLLSK
160	290	104	3	870	1,290	88,500	132,000	WA22232BLLS	WA22232BLLSK

❶ Smallest allowable dimension for chamfer dimension r. ❷ "**K**" indicates bearings have tapered bore with a taper ratio of 1: 12.

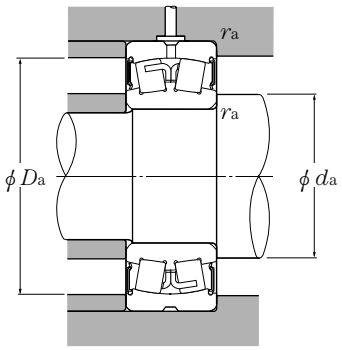

Equivalent bearing load

dynamic

$P_r = XF_r + YF_a$

$\frac{F_a}{F_r} \leqq e$		$\frac{F_a}{F_r} > e$	
X	Y	X	Y
1	Y_1	0.67	Y_2

static

$P_{or} = F_r + Y_o F_a$

For values of e, Y_2 and Y_o see the table below.

Abutment and fillet dimensions (mm)				Constant	Axial load factors			Mass (approx.) (kg)	
d_a min	d_a max	D_a max	r_{as} max	e	Y_1	Y_2	Y_0	Cylindrical bore	Tapered bore
68.5	74.5	101.5	1.5	0.27	2.49	3.71	2.44	1.41	1.37
73.5	80	111.5	1.5	0.28	2.42	3.60	2.37	1.80	1.76
78.5	84	116.5	1.5	0.26	2.55	3.80	2.50	1.91	1.86
83.5	89.5	121.5	1.5	0.24	2.81	4.19	2.75	2.06	2.00
90	94.5	130	2	0.26	2.64	3.93	2.58	2.51	2.45
95	101	140	2	0.26	2.60	3.88	2.55	3.08	3.01
100	107	150	2	0.26	2.55	3.80	2.49	4.08	3.97
107	114	158	2	0.26	2.63	3.92	2.57	4.71	4.59
112	119	168	2	0.26	2.55	3.80	2.49	6.01	5.83
122	133	188	2	0.27	2.51	3.74	2.46	8.87	8.60
132	147	203	2	0.27	2.47	3.68	2.42	11.2	10.9
144	154	216	2.5	0.28	2.39	3.56	2.33	12.5	12.1
154	168	236	2.5	0.28	2.39	3.55	2.33	16.9	16.3
164	185	256	2.5	0.27	2.46	3.66	2.40	22.6	21.9
174	197	276	2.5	0.28	2.42	3.60	2.37	28.0	27.2

Spherical Surface Slide Bearings

- These are self-aligning sliding bearings: the sliding parts form a spherical surface. The bearings also can support radial loads and axial loads in either direction.
- A lubricant (oil or grease) should be used since the sliding parts are steel on steel.
- These bearings are suitable for swinging and aligning movements, and used in joint-movement parts for industrial and construction machines.

Grease up type

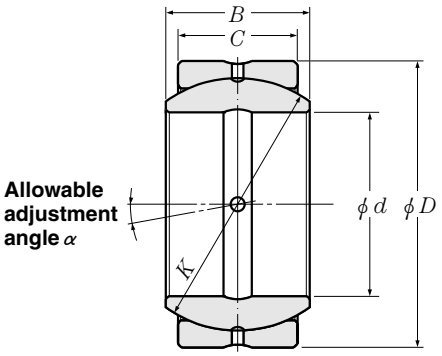

Drawing A
Divided by 1 place (outer ring)

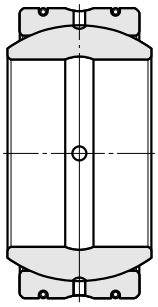

Drawing B
Divided by 2 place (outer ring)

d 110～420mm

Boundary dimensions mm					α	Basic load ratings dynamic kN	static kN	dynamic kgf	static kgf	Bearing numbers
d	D	B	C	K	(deg.)	C_d	C_s	C_d	C_s	
110	180	85	70	160	6	1,100,000	6,600,000	112,000	670,000	W2222
	180	100	75	160	10	1,180,000	7,050,000	120,000	720,000	W2225
180	260	105	60	225	12	1,110,000	6,670,000	113,000	680,000	W3617
200	290	130	120	250	2	2,550,000	15,300,000	260,000	1,560,000	W4029
260	430	215	195	375	3	6,350,000	38,000,000	645,000	3,900,000	W52A07
280	350	69	69	320	—	2,170,000	13,000,000	221,000	1,320,000	W5605
	430	220	140	375	10	4,900,000	29,600,000	500,000	3,010,000	W5613
300	440	190	150	380	6	5,000,000	30,500,000	510,000	3,050,000	W6022
320	440	160	120	380	6	4,200,000	25,300,000	430,000	2,580,000	W6415
380	480	100	100	430	—	4,200,000	25,300,000	430,000	2,580,000	W7601
420	540	120	120	480	—	5,650,000	34,000,000	575,000	3,450,000	W8407

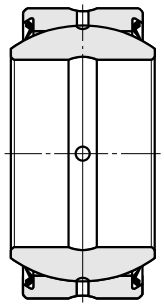

Drawing C
Divided by 1 place (outer ring)
Plastic sealed

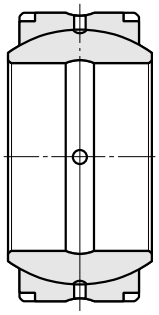

Drawing D
Divided by 2 place (outer ring)
Retaining ring (shrinkage fit) type
(D ≧ 500mm)

Drawing no.	Mass kg (approx.)	Remarks
A	9.42	
C	10.3	
A	16.1	Inner ring outside dia. with oil groove
B	33.0	Inner ring outside dia. with oil groove
B	140	Inner ring outside dia. with oil groove
B	18.7	Without oil hole, oil groove
B	106	Inner ring outside dia. with oil groove
B	101	Inner ring outside dia. with oil groove
B	72	Inner ring outside dia. with oil groove
B	52.9	Without oil hole, oil groove
D	85.0	Without oil hole, oil groove

Catalog List & Appendix Table

CATALOG TITLES	CATALOG No.
●BALL AND ROLLER BEARINGS	
Ball and Roller Bearings	2202/C/E/I/P/S
Large Bearings	2250/E/P
Miniature and Extra Small Ball Bearings	3013/E
Miniature Molded Rubber Bearings	3014/E
Ball Bearings Shield and Seal Types	3015/E
Care and Maintenance of Bearings	3017/E/S/P
HL Bearings	3020/E
Bearings with Solid Grease	3022/E/S/P
Large Size, Long Operating Life Bearing-EA type	3024/E/P
Tapered Roller Bearings ECO-Top	3026/E/S/C
Self-Aligning Spherical Roller Bearings LH Series	3027/E/S/C
Bearings for Clean Environment	3028/E
Insulated Bearings-Resin Coated Type	3204/E
Type E Spherical Roller Bearings	3701/E
Sealed Self-Aligning Roller Bearings-WA Type	3702/E/S
Spherical Roller Bearings-UA Type	3710/E
HUB BEARINGS	4601/E
Aerospace Bearings	8102/E
Precision Rolling Bearings for Machine Tools	8401/E
Super High-speed Precision Bearings for Main Spindles of Machine Tools	8403/E
●NEEDLE ROLLER BEARINGS	
Needle Roller Bearings	2300/E/I/P/S
Miniature Cam Followers	3601/E
●CONSTANT VELOCITY JOINTS	
Constant Velocity Joints for Automobiles	5601/JE
TRI-Ball Joint / Constant Velocity Joints	5602/E
Constant Velocity Joints for Industrial Machines	5603/E
●BEARING UNITS	
Bearing Units	2400/E/I/S
Bearing Units with Ductile Cast Iron Housing	3901/E
Bearing Units Steel Series	3902/E
Bearing Units Stainless Series	3903/E
Bearing Units Plastic Housing Series	3904/E
Triple-Sealed Bearings for Bearing Units	3905/E

CATALOG TITLES	CATALOG No.
●PLUMMER BLOCKS	
Plummer Blocks	2500E/S
●PRECISION BALL SCREWS	
Precision Ball Screws	6000/E
Rolled Ball Screws	6206/E
●PARTS FEEDER	
Parts Feeder	7018/E
NTN Parts Feeder with Standard Attachments (for Bolts or Washer)	7016/E
●CLUTCHES	
One-way Clutches (Overrunning Clutches)	6402/E
●PLAIN BEARINGS	
"BEAREE" NTN Engineering Plastics	5100/E
Miniature Plastic Sliding Screws	5112/E
NTN "BEARPHITE" Oil Impregnated Sintered Bearings	5202/E
Spherical Plain Bearings	5301/E
●HANDBOOK	
Bearing Units Handbook	9011/E/S
Rolling Bearings Handbook	9012/E
Needle Roller Bearings Handbook	9013/E
●GUIDE BOOK	
Parts Feeder Guide Book	7019/E
Automotive Products Guide Book	8021/E/D/F/C
New Products Guide	9208/E/C
Food Machinery Component Guide	9209/E
Product Catalog for Paper Manufacturing Machinery	9210/E
Steel Manufacturing Machinery Product Guide Book	9211/E
●ELECTRONIC CATALOG	
NTN Electronic Catalog (CD-ROM for Windows)	7903/E
NTN Autoparts Catalog (CD-ROM for Windows)	7905/E
Reference Kit Program -Bearing Interchange- (CD-ROM for Windows)	7907/E
●OTHERS	
Bearing Handling	9103/E/P/S

C:Chinese E:English F:French D:Germany I:Italian
K:Korean S:Spanish T:Thai TC: Taipei Chinese

Note : The above are basic numbers. Renewal of the suffix by a revision.

Appendix table 1: Boundary dimensions of radial bearings (Tapered roller bearings not included)-1

| | | |

Appendix table 1: Boundary dimensions of radial bearings (Tapered roller bearings not included)-2

Single row radial ball bearings										62 72		1,22	1,32						63 73		623	633				64 74		
Double row radial ball bearings										12		42 22	52 32						13		43 23	53 33						
Cylindrical roller bearings				NN31						N2		N22	N32						N3		N23	N33				N4		
Needle roller bearings																												
Spherical roller bearings				231	241							222	232						213		223							

Nominal bearing bore diameter d		Diameter series 1								Diameter series 2								Diameter series 3								Diameter series 4			
		Nominal outside diameter of bearing D	Dimension series							Nominal outside diameter of bearing D	Dimension series							Nominal outside diameter of bearing D	Dimension series							Nominal outside diameter of bearing D	Dimension series		
Number	Dimension		01	11	21	31	41	01	11~41		82	02	12	22	32	42	82	02~42		83	03	13	23	33	83	03~33		04	24	
			Nominal width B						Chamfer dimension γ s min		Nominal width B						Chamfer dimension γ s min			Nominal width B					Chamfer dimension γ s min			Nominal width B		Chamfer dimension γ s min
—	—	—	—	—	—	—	—	—	—	—	—	—	—	—	—	—	—	—	—	—	—	—	—	—	—	—	—	—	—
1	—	—	—	—	—	—	—	—	—	—	—	—	—	—	—	—	—	—	—	—	—	—	—	—	—	—	—	—	—
—	—	—	—	—	—	—	—	—	—	—	—	—	—	—	—	—	—	—	—	—	—	—	—	—	—	—	—	—	—
2	—	—	—	—	—	—	—	—	—	—	—	—	—	—	—	—	—	—	—	—	—	—	—	—	—	—	—	—	—
—	—	—	—	—	—	—	—	—	—	—	—	—	—	—	—	—	—	—	—	—	—	—	—	—	—	—	—	—	—
3	3	—	—	—	—	—	—	—	—	10	2.5	4	—	—	5	—	0.1	0.15	13	—	5	—	—	7	—	0.2	—	—	—
4	4	—	—	—	—	—	—	—	—	13	3	5	—	—	7	—	0.15	0.2	16	—	5	—	—	9	—	0.3	—	—	—
5	5	—	—	—	—	—	—	—	—	16	3.5	5	—	—	8	—	0.15	0.3	19	—	6	—	—	10	—	0.3	—	—	—
6	6	—	—	—	—	—	—	—	—	19	4	6	—	—	10	—	0.2	0.3	22	—	7	—	11	13	—	0.3	—	—	—
7	7	—	—	—	—	—	—	—	—	22	5	7	—	—	11	—	0.3	0.3	26	—	9	—	13	15	—	0.3	—	—	—
8	8	—	—	—	—	—	—	—	—	24	5	8	—	—	12	—	0.3	0.3	28	—	9	—	13	15	—	0.3	30	10	14	0.6
9	9	—	—	—	—	—	—	—	—	26	6	8	—	—	13	—	0.3	0.3	30	—	10	—	14	16	—	0.6	32	11	15	0.6
00	10	—	—	—	—	—	—	—	—	30	7	9	—	14	14.3	—	0.3	0.6	35	9	11	—	17	19	0.3	0.6	37	12	16	0.6
01	12	—	—	—	—	—	—	—	—	32	7	10	—	14	15.9	—	0.3	0.6	37	9	12	—	17	19	0.3	1	42	13	19	1
02	15	—	—	—	—	—	—	—	—	35	8	11	—	14	15.9	20	0.3	0.6	42	9	13	—	17	19	0.3	1	52	15	24	1.1
03	17	—	—	—	—	—	—	—	—	40	8	12	—	16	17.5	22	0.3	0.6	47	10	14	—	19	22.2	0.6	1	62	17	29	1.1
04	20	—	—	—	—	—	—	—	—	47	9	14	—	18	20.6	27	0.3	1	52	10	15	—	21	22.2	0.6	1.1	72	19	33	1.1
/22	22	—	—	—	—	—	—	—	—	50	9	14	—	18	20.6	27	0.3	1	56	11	16	—	21	25	0.6	1.1	—	—	—	—
05	25	—	—	—	—	—	—	—	—	52	10	15	—	18	20.6	27	0.3	1	62	12	17	—	24	25.4	0.6	1.1	80	21	36	1.5
/28	28	—	—	—	—	—	—	—	—	58	10	16	—	19	23	30	0.6	1	68	13	18	—	24	30	0.6	1.1	—	—	—	—
06	30	—	—	—	—	—	—	—	—	62	10	16	—	20	23.8	32	0.6	1	72	13	19	—	27	30.2	0.6	1.1	90	23	40	1.5
/32	32	—	—	—	—	—	—	—	—	65	11	17	—	21	25	33	0.6	1	75	14	20	—	28	32	0.6	1.1	—	—	—	—
07	35	—	—	—	—	—	—	—	—	72	12	17	—	23	27	37	0.6	1.1	80	14	21	—	31	34.9	0.6	1.5	100	25	43	1.5
08	40	—	—	—	—	—	—	—	—	80	13	18	—	23	30.2	40	0.6	1.1	90	16	23	—	33	36.5	1	1.5	110	27	46	2
09	45	—	—	—	—	—	—	—	—	85	13	19	—	23	30.2	40	0.6	1.1	100	17	25	—	36	39.7	1	1.5	120	29	50	2
10	50	—	—	—	—	—	—	—	—	90	13	20	—	23	30.2	40	0.6	1.1	110	19	27	—	40	44.4	1	2	130	31	53	2.1
11	55	—	—	—	—	—	—	—	—	100	14	21	—	25	33.3	45	1	1.5	120	21	29	—	43	49.2	1.1	2	140	33	57	2.1
12	60	—	—	—	—	—	—	—	—	110	16	22	—	28	36.5	50	1	1.5	130	22	31	—	46	54	1.1	2.1	150	35	60	2.1
13	65	—	—	—	—	—	—	—	—	125	18	23	—	31	38.1	56	1	1.5	140	24	33	—	48	58.7	1.1	2.1	160	37	64	2.1
14	70	—	—	—	—	—	—	—	—	125	18	24	—	31	39.7	56	1	1.5	150	25	35	—	51	63.5	1.5	2.1	180	42	74	3
15	75	—	—	—	—	—	—	—	—	130	18	25	—	31	41.3	56	1	1.5	160	27	37	—	55	68.3	1.5	2.1	190	45	77	3
16	80	—	—	—	—	—	—	—	—	140	19	26	—	33	44.4	60	1	2	170	28	39	—	58	68.3	1.5	2.1	200	48	80	3
17	85	—	—	—	—	—	—	—	—	150	21	28	—	36	49.2	65	1.1	2	180	30	41	—	60	73	2	3	210	52	86	4
18	90	150	—	—	—	—	60	—	2	160	22	30	—	40	52.4	69	1.1	2	190	30	43	—	64	73	2	3	225	54	90	4
19	95	160	—	—	—	—	65	—	2	170	24	32	—	43	55.6	75	1.1	2.1	200	33	45	—	67	77.8	2	3	240	55	95	4
20	100	165	21	30	39	52	65	1.1	2	180	25	34	—	46	60.3	80	1.5	2.1	215	36	47	51	73	82.6	2.1	3	250	58	98	4
21	105	175	22	33	42	56	69	1.1	2	190	27	36	—	50	65.1	85	1.5	2.1	225	37	49	53	77	87.3	2.1	3	260	60	100	4
22	110	180	22	33	42	56	69	1.1	2	200	28	38	—	53	69.8	90	1.5	2.1	240	42	50	57	80	92.1	3	3	280	65	108	4
24	120	200	25	38	48	62	80	1.5	2	215	—	40	42	58	76	95	—	2.1	260	44	55	62	86	106	3	3	310	72	118	5
26	130	210	25	38	48	64	80	1.5	2	230	—	40	46	64	80	100	—	3	280	48	58	66	93	112	3	4	340	78	128	5
28	140	225	27	40	50	68	85	1.5	2.1	250	—	42	50	68	88	109	—	3	300	50	62	70	102	118	4	4	360	82	132	5
30	150	250	31	46	60	80	100	2	2.1	270	—	45	54	73	96	118	—	3	320	—	65	75	108	128	—	4	380	85	138	5
32	160	270	34	51	66	86	109	2	2.1	290	—	48	58	80	104	128	—	3	340	—	68	79	114	136	—	4	400	88	142	5
34	170	280	34	51	66	88	109	2	2.1	310	—	52	62	86	110	140	—	4	360	—	72	84	120	140	—	4	420	92	145	5
36	180	300	37	56	72	96	118	2.1	3	320	—	52	62	86	112	140	—	4	380	—	75	88	126	150	—	4	440	95	150	6
38	190	320	42	60	78	104	128	3	3	340	—	55	65	92	120	150	—	4	400	—	78	92	132	155	—	5	460	98	155	6
40	200	340	44	65	82	112	140	3	3	360	—	58	70	98	128	160	—	4	420	—	80	97	138	165	—	5	480	102	160	6
44	220	370	48	69	88	120	150	3	4	400	—	65	78	108	144	180	—	4	460	—	88	106	145	180	—	5	540	115	180	6
48	240	400	50	74	95	128	160	4	4	440	—	72	85	120	160	200	—	4	500	—	95	114	155	195	—	5	580	122	190	6
52	260	440	57	82	106	144	180	4	4	480	—	80	90	130	174	218	—	5	540	—	102	123	165	206	—	6	620	132	206	7.5
56	280	460	57	82	106	146	180	4	5	500	—	80	90	130	176	218	—	5	580	—	108	132	175	224	—	6	670	140	224	7.5
60	300	500	63	90	118	160	200	5	5	540	—	85	98	140	192	243	—	5	620	—	109	140	185	236	—	7.5	710	150	236	7.5
64	320	540	71	100	128	176	218	5	5	580	—	92	105	150	208	258	—	5	670	—	112	155	200	258	—	7.5	750	155	250	9.5
68	340	580	78	106	140	190	243	5	5	620	—	92	118	165	224	280	—	6	710	—	118	165	212	272	—	7.5	800	164	265	9.5
72	360	600	78	106	140	192	243	5	5	650	—	95	122	170	232	290	—	6	750	—	125	170	224	290	—	7.5	850	180	280	9.5
76	380	620	78	106	140	194	243	5	5	680	—	95	132	175	240	300	—	6	780	—	128	175	230	300	—	7.5	900	190	300	9.5
80	400	650	80	112	145	200	250	6	6	720	—	103	140	185	256	315	—	6	820	—	136	185	243	308	—	7.5	950	200	315	12
84	420	700	88	122	165	224	280	6	6	760	—	109	150	195	272	335	—	7.5	850	—	136	190	250	315	—	9.5	980	206	325	12
88	440	720	88	122	165	226	280	6	6	790	—	112	155	200	280	345	—	7.5	900	—	145	200	265	345	—	9.5	1030	212	335	12
92	460	760	95	132	175	240	300	6	7.5	830	—	118	165	212	296	365	—	7.5	950	—	155	212	280	365	—	9.5	1060	218	345	12
96	480	790	100	136	180	248	308	6	7.5	870	—	125	170	224	310	388	—	7.5	980	—	160	218	290	375	—	9.5	1120	230	365	15
/500	500	830	106	145	190	264	325	7.5	7.5	920	—	136	185	243	336	412	—	7.5	1030	—	170	230	300	388	—	12	1150	236	375	15
/530	530	870	109	150	195	272	335	7.5	7.5	980	—	145	200	258	355	450	—	9.5	1090	—	180	243	325	412	—	12	1220	250	400	15
/560	560	920	115	160	206	280	355	7.5	7.5	1030	—	150	206	272	365	475	—	9.5	1150	—	190	258	335	438	—	12	1280	258	412	15
/600	600	980	122	170	218	300	375	7.5	7.5	1090	—	155	212	280	388	488	—	9.5	1220	—	200	272	355	462	—	15	1360	272	438	15
/630	630	1030	128	175	230	315	400	7.5	7.5	1150	—	165	230	300	412	515	—	12	1280	—	206	280	375	488	—	15	1420	280	450	15
/670	670	1090	136	185	243	336	412	7.5	7.5	1220	—	175	243	315	438	545	—	12	1360	—	218	300	400	515	—	15	1500	290	475	15
/710	710	1150	140	195	250	345	438	9.5	9.5	1280	—	180	250	325	450	560	—	12	1420	—	224	308	412	530	—	15	—	—	—	—
/750	750	1220	150	206	272	365	475	9.5	9.5	1360	—	195	265	345	475	615	—	15	1500	—	236	325	438	560	—	15	—	—	—	—
/800	800	1280	155	212	272	375	475	9.5	9.5	1420	—	200	272	355	488	615	—	15	1600	—	258	355	462	600	—	15	—	—	—	—
/850	850	1360	165	224	290	400	500	12	12	1500	—	206	280	375	515	650	—	15	1700	—	272	375	488	630	—	19	—	—	—	—
/900	900	1420	165	230	300	412	515	12	12	1580	—	218	300	388	515	670	—	15	1780	—	280	388	500	650	—	19	—	—	—	—
/950	950	1500	175	243	315	438	545	12	12	1660	—	230	315	412	530	710	—	15	1850	—	290	400	515	670	—	19	—	—	—	—
/1000	1000	1580	185	258	335	462	580	12	12	1750	—	243	330	425	560	750	—	15	1950	—	300	412	545	710	—	19	—	—	—	—
/1060	1060	1660	190	265	345	475	600	12	15	—	—	—	—	—	—	—	—	—	—	—	—	—	—	—	—	—	—	—	—
/1120	1120	1750	—	280	365	475	630	—	15	—	—	—	—	—	—	—	—	—	—	—	—	—	—	—	—	—	—	—	—
/1180	1180	1850	—	290	388	500	670	—	15	—	—	—	—	—	—	—	—	—	—	—	—	—	—	—	—	—	—	—	—
/1250	1250	1950	—	308	400	530	710	—	15	—	—	—	—	—	—	—	—	—	—	—	—	—	—	—	—	—	—	—	—
/1320	1320	2060	—	325	425	560	750	—	15	—	—	—	—	—	—	—	—	—	—	—	—	—	—	—	—	—	—	—	—
/1400	1400	2180	—	345	450	580	775	—	19	—	—	—	—	—	—	—	—	—	—	—	—	—	—	—	—	—	—	—	—
/1500	1500	2300	—	355	462	600	800	—	19	—	—	—	—	—	—	—	—	—	—	—	—	—	—	—	—	—	—	—	—

Appendix table 2: Comparison of SI, CGS and gravity units-1

Quantity / Unit system	Length L	Mass M	Time T	Acceleration	Force	Stress	Pressure	Energy
SI	m	kg	s	m/s^2	N	Pa	Pa	J
CGS system	cm	g	s	Gal	dyn	dyn/cm^2	dyn/cm^2	erg
Gravitation system	m	$kgf \cdot s^2/m$	s	m/s^2	kgf	kgf/m^2	kgf/m^2	$kgf \cdot m$

Appendix table 3: SI-customary unit conversion table-1

Quantity	Unit designation	Symbol	Conversion rate to SI	SI unit designation	Symbol
Angle	Degree	°	π /180	Radian	rad
	Minute	′	π /10 800		
	Second	″ (sec)	π /648 000		
Length	Meter	m	1	Meter	m
	Micron	μ	10^{-6}		
	Angstrom	Å	10^{-10}		
Area	Square meter	m^2	1	Square meter	m^2
	Are	a	10^2		
	Hectare	ha	10^4		
Volume	Cubic meter	m^3	1	Cubic meter	m^3
	Liter	R.L	10^{-3}		
Mass	Kilogram	kg	1	Kilogram	kg
	Ton	t	10^3		
	Kilogram force / square second per meter	$kgf \cdot s^2/m$	9.806 65		
Time	Second	s	1	Second	s
	Minute	min	60		
	Hour	h	3 600		
	Day	d	86 400		
Speed	Meters per second	m/s	1	Meters per second	m/s
	Knot	kn	1 852/3 600		
Frequency and vibration	Cycle	s^{-1} (pps)	1	Hertz	Hz
Revolutions (rotational speed)	Revolutions per minute (rpm)	rpm(r/min)	1/60	Per second	s^{-1}
Angular speed	Radians per second	rad/s	1	Radians per second	rad/s
Acceleration	Meters per square second	m/s^2	1	Meters per second square	m/s^2
	G	G	9.806 65		
Force	Kilogram force	kgf	9.806 65	Newton	N
	Ton force	tf	9 806.65		
	Dyne	dyn	10^{-5}		
Force moment	Kilogram force / meter	$kgf \cdot m$	9.806 65	Newton meter	$N \cdot m$
Inertia moment	Kilogram force / meter / square second	$kgf \cdot m \cdot s^2$	9.806 65	Kilogram / square meter	$kg \cdot m^2$
Stress	Kilogram force per square meter	kgf/m^2	9.806 65	Pascal or newton per square meter	Pa or N/m^2
Pressure	Kilogram force per square meter	kgf/m^2	9.806 65	Pascal	Pa
	Meter water column	mH_2O	9 806.65		
	Meter of mercury	mHg	101 325/0.76		
	Torr	Torr	101 325/760		
	Atmosphere	atm	101 325		
	Bar	bar	10^5		
Energy	Erg	erg	10^{-7}	Joule	J
	IT calorie	cal_{IT}	4.186 8		
	Kilogram force / meter	$kgf \cdot m$	9.806 65		
	Kilowatt hour	$kW \cdot h$	3.600×10^6		
	Metric horsepower per hour	$PS \cdot h$	$2.647\ 79 \times 10^6$		
Power rate and power	Watt	W	1	Watt	W
	Metric horsepower	PS	735.5		
	Kilogram force / meter per second	$kgf \cdot m/s$	9.806 65		

Appendix table 2: Comparison of SI, CGS and gravity units-2

Quantity / Unit system	Power rate	Temperature	Viscosity	Dynamic viscosity	Magnetic flux	Flux density	Magnetic field strength
SI	W	K	Pa · s	m^2/s	Wb	T	A/m
CGS system	erg/s	˚C	P	St	Mx	Gs	Oe
Gravitation system	kgf · m/s	˚C	kgf · s/m^2	m^2/s	—	—	—

Appendix table 3: SI-customary unit conversion table-2

Quantity	Unit designation	Symbol	Conversion rate to SI	SI unit designation	Symbol
Viscosity	Poise	P	10^{-1}	Pascal second	Pa · s
	Centipoise	cP	10^{-3}		
	Kilogram force / square second per meter	kgf · s/m^2	9.806 65		
Dynamic viscosity	Stoke	St	10^{-4}	Square meter per second	m^2/s
	Centistoke	cSt	10^{-6}		
Temperature	Degree	˚C	+273.15	Kelvin	K
Radioactive	Curie	Ci	3.7×10^{10}	Becquerel	Bq
Dosage	Roentgen	R	2.58×10^{-4}	Coulombs per kilogram	C/kg
Absorption dosage	Rad	rad	10^{-2}	Gray	Gy
Dosage equivalent	Rem	rem	10^{-2}	Sievert	Sv
Magnetic flux	Maxwell	Mx	10^{-8}	Weber	Wb
Flux density	Gamma	γ	10^{-9}	Tesla	T
	Gauss	Gs	10^{-4}		
Magnetic field strength	Oersted	Oe	$10^3/4\pi$	Amperes per meter	A/m
Quantity of electricity	Coulomb	C	1	Coulomb	C
Potential difference	Volt	V	1	Volt	V
Electric resistance	Ohm	Ω	1	Ohm	Ω
Current	Ampere	A	1	Ampere	A

Appendix table 4: Tenth power multiples of SI unit

Multiples of unit	Prefix		Multiples of unit	Prefix	
	Name	Symbol		Name	Symbol
10^{18}	Exa	E	10^{-1}	Deci	d
10^{15}	Peta	P	10^{-2}	Centi	c
10^{12}	Tera	T	10^{-3}	Mili	m
10^{9}	Giga	G	10^{-6}	Micro	μ
10^{6}	Mega	M	10^{-9}	Nano	n
10^{3}	Kilo	k	10^{-12}	Pico	p
10^{2}	Hecto	h	10^{-15}	Femto	f
10	Deca	da	10^{-18}	Ato	a

Appendix table 5: Dimensional tolerance for shafts

Diameter division mm over	incl.	a13 high	a13 low	c12 high	c12 low	d6 high	d6 low	e6 high	e6 low	e13 high	e13 low	f5 high	f5 low	f6 high	f6 low	g5 high	g5 low	g6 high	g6 low
3	6	− 270	− 450	− 70	− 190	− 30	− 38	− 20	− 28	− 20	− 200	−10	−15	− 10	− 18	− 4	− 9	− 4	− 12
6	10	− 280	− 500	− 80	− 230	− 40	− 49	− 25	− 34	− 25	− 245	−13	−19	− 13	− 22	− 5	−11	− 5	− 14
10	18	− 290	− 560	− 95	− 275	− 50	− 61	− 32	− 43	− 32	− 302	−16	−24	− 16	− 27	− 6	−14	− 6	− 17
18	30	− 300	− 630	−110	− 320	− 65	− 78	− 40	− 53	− 40	− 370	−20	−29	− 20	− 33	− 7	−16	− 7	− 20
30	40	− 310	− 700	−120	− 370	− 80	− 96	− 50	− 66	− 50	− 440	−25	−36	− 25	− 41	− 9	−20	− 9	− 25
40	50	− 320	− 710	−130	− 380														
50	65	− 340	− 800	−140	− 440	−100	−119	− 60	− 79	− 60	− 520	−30	−43	− 30	− 49	−10	−23	−10	− 29
65	80	− 360	− 820	−150	− 450														
80	100	− 380	− 920	−170	− 520	−120	−142	− 72	− 94	− 72	− 612	−36	−51	− 36	− 58	−12	−27	−12	− 34
100	120	− 410	− 950	−180	− 530														
120	140	− 460	−1 090	−200	− 600	−145	−170	− 85	−110	− 85	− 715	−43	−61	− 43	− 68	−14	−32	−14	− 39
140	160	− 520	−1 150	−210	− 610														
160	180	− 580	−1 210	−230	− 630														
180	200	− 660	−1 380	−240	− 700	−170	−199	−100	−129	−100	− 820	−50	−70	− 50	− 79	−15	−35	−15	− 44
200	225	− 740	−1 460	−260	− 720														
225	250	− 820	−1 540	−280	− 740														
250	280	− 920	−1 730	−300	− 820	−190	−222	−110	−142	−110	− 920	−56	−79	− 56	− 88	−17	−40	−17	− 49
280	315	−1 050	−1 860	−330	− 850														
315	355	−1 200	−2 090	−360	− 930	−210	−246	−125	−161	−125	−1 015	−62	−87	− 62	− 98	−18	−43	−18	− 54
355	400	−1 350	−2 240	−400	− 970														
400	450	−1 500	−2 470	−440	−1 070	−230	−270	−135	−175	−135	−1 105	−68	−95	− 68	−108	−20	−47	−20	− 60
450	500	−1 650	−2 620	−480	−1 110														
500	560	−	−	−	−	−260	−304	−145	−189	−	−	−	−	− 76	−120	−	−	−22	− 66
560	630																		
630	710	−	−	−	−	−290	−340	−160	−210	−	−	−	−	− 80	−130	−	−	−24	− 74
710	800																		
800	900	−	−	−	−	−320	−376	−170	−226	−	−	−	−	− 86	−142	−	−	−26	− 82
900	1 000																		
1 000	1 120	−	−	−	−	−350	−416	−195	−261	−	−	−	−	− 98	−164	−	−	−28	− 94
1 120	1 250																		
1 250	1 400	−	−	−	−	−390	−468	−220	−298	−	−	−	−	−110	−188	−	−	−30	−108
1 400	1 600																		

Diameter division mm over	incl.	j5 high	j5 low	js5 high	js5 low	j6 high	j6 low	js6 high	js6 low	j7 high	j7 low	k4 high	k4 low	k5 high	k5 low	k6 high	k6 low	m5 high	m5 low
3	6	+3	− 2	+ 2.5	− 2.5	+ 6	− 2	+ 4	− 4	+ 8	− 4	+ 5	+1	+ 6	+1	+ 9	+1	+ 9	+ 4
6	10	+4	− 2	+ 3	− 3	+ 7	− 2	+ 4.5	− 4.5	+10	− 5	+ 5	+1	+ 7	+1	+10	+1	+12	+ 6
10	18	+5	− 3	+ 4	− 4	+ 8	− 3	+ 5.5	− 5.5	+12	− 6	+ 6	+1	+ 9	+1	+12	+1	+15	+ 7
18	30	+5	− 4	+ 4.5	− 4.5	+ 9	− 4	+ 6.5	− 6.5	+13	− 8	+ 8	+2	+11	+2	+15	+2	+17	+ 8
30	40	+6	− 5	+ 5.5	− 5.5	+11	− 5	+ 8	− 8	+15	−10	+ 9	+2	+13	+2	+18	+2	+20	+ 9
40	50																		
50	65	+6	− 7	+ 6.5	− 6.5	+12	− 7	+ 9.5	− 9.5	+18	−12	+10	+2	+15	+2	+21	+2	+24	+11
65	80																		
80	100	+6	− 9	+ 7.5	− 7.5	+13	− 9	+11	−11	+20	−15	+13	+3	+18	+3	+25	+3	+28	+13
100	120																		
120	140	+7	−11	+ 9	− 9	+14	−11	+12.5	−12.5	+22	−18	+15	+3	+21	+3	+28	+3	+33	+15
140	160																		
160	180																		
180	200	+7	−13	+10	−10	+16	−13	+14.5	−14.5	+25	−21	+18	+4	+24	+4	+33	+4	+37	+17
200	225																		
225	250																		
250	280	+7	−16	+11.5	−11.5	+16	−16	+16	−16	+26	−26	+20	+4	+27	+4	+36	+4	+43	+20
280	315																		
315	355	+7	−18	+12.5	−12.5	+18	−18	+18	−18	+29	−28	+22	+4	+29	+4	+40	+4	+46	+21
355	400																		
400	450	+7	−20	+13.5	−13.5	+20	−20	+20	−20	+31	−32	+25	+5	+32	+5	+45	+5	+50	+23
450	500																		
500	560	−	−	−	−	−	−	+22	−22	−	−	−	−	−	−	+44	0	−	−
560	630																		
630	710	−	−	−	−	−	−	+25	−25	−	−	−	−	−	−	+50	0	−	−
710	800																		
800	900	−	−	−	−	−	−	+28	−28	−	−	−	−	−	−	+56	0	−	−
900	1 000																		
1 000	1 120	−	−	−	−	−	−	+33	−33	−	−	−	−	−	−	+66	0	−	−
1 120	1 250																		
1 250	1 400	−	−	−	−	−	−	+39	−39	−	−	−	−	−	−	+78	0	−	−
1 400	1 600																		

Unit μm

h4		h5		h6		h7		h8		h9		h10		h11		h13		js4		Diameter division mm	
high	low	high	low	high	low	high	low	high	low	high	low	high	low	high	low	high	low	high	low	over	incl.
0	− 4	0	− 5	0	− 8	0	− 12	0	− 18	0	− 30	0	− 48	0	− 75	0	−180	+ 2	− 2	3	6
0	− 4	0	− 6	0	− 9	0	− 15	0	− 22	0	− 36	0	− 58	0	− 90	0	−220	+ 2	− 2	6	10
0	− 5	0	− 8	0	−11	0	− 18	0	− 27	0	− 43	0	− 70	0	−110	0	−270	+ 2.5	− 2.5	10	18
0	− 6	0	− 9	0	−13	0	− 21	0	− 33	0	− 52	0	− 84	0	−130	0	−330	+ 3	− 3	18	30
0	− 7	0	− 11	0	−16	0	− 25	0	− 39	0	− 62	0	−100	0	−160	0	−390	+ 3.5	− 3.5	30 40	40 50
0	− 8	0	−13	0	−19	0	− 30	0	− 46	0	− 74	0	−120	0	−190	0	−460	+ 4	− 4	50 65	65 80
0	−10	0	−15	0	−22	0	− 35	0	− 54	0	− 87	0	−140	0	−220	0	−540	+ 5	− 5	80 100	100 120
0	−12	0	−18	0	−25	0	− 40	0	− 63	0	−100	0	−160	0	−250	0	−630	+ 6	− 6	120 140 160	140 160 180
0	−14	0	−20	0	−29	0	− 46	0	− 72	0	−115	0	−185	0	−290	0	−720	+ 7	− 7	180 200 225	200 225 250
0	−16	0	−23	0	−32	0	− 52	0	− 81	0	−130	0	−210	0	−320	0	−810	+ 8	− 8	250 280	280 315
0	−18	0	−25	0	−36	0	− 57	0	− 89	0	−140	0	−230	0	−360	0	−890	+ 9	− 9	315 355	355 400
0	−20	0	−27	0	−40	0	− 63	0	− 97	0	−155	0	−250	0	−400	0	−970	+10	−10	400 450	450 500
−	−	−	−	0	−44	0	− 70	0	−110	0	−175	0	−280	0	−440	0	−	−	−	500 560	560 630
−	−	−	−	0	−50	0	− 80	0	−125	0	−200	0	−320	0	−500	0	−	−	−	630 710	710 800
−	−	−	−	0	−56	0	− 90	0	−140	0	−230	0	−360	0	−560	0	−	−	−	800 900	900 1 000
−	−	−	−	0	−66	0	−105	0	−165	0	−260	0	−420	0	−660	0	−	−	−	1 000 1 120	1 120 1 250
−	−	−	−	0	−78	0	−125	0	−195	0	−310	0	−500	0	−780	0	−	−	−	1 250 1 400	1 400 1 600

Unit μm

m6		n5		n6		p5		p6		r6		r7		Basic tolerance				Diameter division mm	
high	low	high	low	high	low	high	low	high	low	high	low	high	low	IT2	IT3	IT5	IT7	over	incl.
+ 12	+ 4	+13	+ 8	+ 16	+ 8	+17	+12	+ 20	+ 12	+ 23	+ 15	+ 27	+ 15	1.5	2.5	5	12	3	6
+ 15	+ 6	+16	+10	+ 19	+10	+21	+15	+ 24	+ 15	+ 28	+ 19	+ 34	+ 19	1.5	2.5	6	15	6	10
+ 18	+ 7	+20	+12	+ 23	+12	+26	+18	+ 29	+ 18	+ 34	+ 23	+ 41	+ 23	2	3	8	18	10	18
+ 21	+ 8	+24	+15	+ 28	+15	+31	+22	+ 35	+ 22	+ 41	+ 28	+ 49	+ 28	2.5	4	9	21	18	30
+ 25	+ 9	+28	+17	+ 33	+17	+37	+26	+ 42	+ 26	+ 50	+ 34	+ 59	+ 34	2.5	4	11	25	30 40	40 50
+ 30	+11	+33	+20	+ 39	+20	+45	+32	+ 51	+ 32	+ 60 + 62	+ 41 + 43	+ 71 + 73	+ 41 + 43	3	5	13	30	50 65	65 80
+ 35	+13	+38	+23	+ 45	+23	+52	+37	+ 59	+ 37	+ 73 + 76	+ 51 + 54	+ 86 + 89	+ 51 + 54	4	6	15	35	80 100	100 120
+ 40	+15	+45	+27	+ 52	+27	+61	+43	+ 68	+ 43	+ 88 + 90 + 93	+ 63 + 65 + 68	+103 +105 +108	+ 63 + 65 + 68	5	8	18	40	120 140 160	140 160 180
+ 46	+17	+51	+31	+ 60	+31	+70	+50	+ 79	+ 50	+106 +109 +113	+ 77 + 80 + 84	+123 +126 +130	+ 77 + 80 + 84	7	10	20	46	180 200 225	200 225 250
+ 52	+20	+57	+34	+ 66	+34	+79	+56	+ 88	+ 56	+126 +130	+ 94 + 98	+146 +150	+ 94 + 98	8	12	23	52	250 280	280 315
+ 57	+21	+62	+37	+ 73	+37	+87	+62	+ 98	+ 62	+144 +150	+108 +114	+165 +171	+108 +114	9	13	25	57	315 355	355 400
+ 63	+23	+67	+40	+ 80	+40	+95	+68	+108	+ 68	+166 +172	+126 +132	+189 +195	+126 +132	10	15	27	63	400 450	450 500
+ 70	+26	−	−	+ 88	+44	−	−	+122	+ 78	+194 +199	+150 +155	+220 +225	+150 +155	−	−	−	70	500 560	560 630
+ 80	+30	−	−	+100	+50	−	−	+138	+ 88	+225 +235	+175 +185	+255 +265	+175 +185	−	−	−	80	630 710	710 800
+ 90	+34	−	−	+112	+56	−	−	+156	+100	+266 +276	+210 +220	+300 +310	+210 +220	−	−	−	90	800 900	900 1 000
+106	+40	−	−	+132	+66	−	−	+186	+120	+316 +326	+250 +260	+355 +365	+250 +260	−	−	−	105	1 000 1 120	1 120 1 250
+126	+48	−	−	+156	+78	−	−	+218	+140	+378 +408	+300 +330	+425 +455	+300 +330	−	−	−	125	1 250 1 400	1 400 1 600

Appendix table 6: Dimensional tolerance for housing bore

Diameter division mm over	incl.	E7 high	E7 low	E10 high	E10 low	E11 high	E11 low	E12 high	E12 low	F6 high	F6 low	F7 high	F7 low	F8 high	F8 low	G6 high	G6 low	G7 high	G7 low	H6 high	H6 low
3	6	+ 32	+ 20	+ 68	+ 20	+ 95	+ 20	+140	+ 20	+ 18	+ 10	+ 22	+ 10	+ 28	+ 10	+ 12	+ 4	+ 16	+ 4	+ 8	0
6	10	+ 40	+ 25	+ 83	+ 25	+115	+ 25	+175	+ 25	+ 22	+ 13	+ 28	+ 13	+ 35	+ 13	+ 14	+ 5	+ 20	+ 5	+ 9	0
10	18	+ 50	+ 32	+102	+ 32	+142	+ 32	+212	+ 32	+ 27	+ 16	+ 34	+ 16	+ 43	+ 16	+ 17	+ 6	+ 24	+ 6	+11	0
18	30	+ 61	+ 40	+124	+ 40	+170	+ 40	+250	+ 40	+ 33	+ 20	+ 41	+ 20	+ 53	+ 20	+ 20	+ 7	+ 28	+ 7	+13	0
30	40	+ 75	+ 50	+150	+ 50	+210	+ 50	+300	+ 50	+ 41	+ 25	+ 50	+ 25	+ 64	+ 25	+ 25	+ 9	+ 34	+ 9	+16	0
40	50																				
50	65	+ 90	+ 60	+180	+ 60	+250	+ 60	+360	+ 60	+ 49	+ 30	+ 60	+ 30	+ 76	+ 30	+ 29	+10	+ 40	+10	+19	0
65	80																				
80	100	+107	+ 72	+212	+ 72	+292	+ 72	+422	+ 72	+ 58	+ 36	+ 71	+ 36	+ 90	+ 36	+ 34	+12	+ 47	+12	+22	0
100	120																				
120	140	+125	+ 85	+245	+ 85	+335	+ 85	+485	+ 85	+ 68	+ 43	+ 83	+ 43	+106	+ 43	+ 39	+14	+ 54	+14	+25	0
140	160																				
160	180																				
180	200	+146	+100	+285	+100	+390	+100	+560	+100	+ 79	+ 50	+ 96	+ 50	+122	+ 50	+ 44	+15	+ 61	+15	+29	0
200	225																				
225	250																				
250	280	+162	+110	+320	+110	+430	+110	+630	+110	+ 88	+ 56	+108	+ 56	+137	+ 56	+ 49	+17	+ 69	+17	+32	0
280	315																				
315	355	+182	+125	+355	+125	+485	+125	+695	+125	+ 98	+ 62	+119	+ 62	+151	+ 62	+ 54	+18	+ 75	+18	+36	0
355	400																				
400	450	+198	+135	+385	+135	+535	+135	+765	+135	+108	+ 68	+131	+ 68	+165	+ 68	+ 60	+20	+ 83	+20	+40	0
450	500																				
500	560	+215	+145	–	–	–	–	–	–	+120	+ 76	+146	+ 76	+186	+ 76	+ 66	+22	+ 92	+22	+44	0
560	630																				
630	710	+240	+160	–	–	–	–	–	–	+130	+ 80	+160	+ 80	+205	+ 80	+ 74	+24	+104	+24	+50	0
710	800																				
800	900	+260	+170	–	–	–	–	–	–	+142	+ 86	+176	+ 86	+226	+ 86	+ 82	+26	+116	+26	+56	0
900	1 000																				
1 000	1 120	+300	+195	–	–	–	–	–	–	+164	+ 98	+203	+ 98	+263	+ 98	+ 94	+28	+133	+28	+66	0
1 120	1 250																				
1 250	1 400	+345	+220	–	–	–	–	–	–	+188	+110	+235	+110	+305	+110	+108	+30	+155	+30	+78	0
1 400	1 600																				
1 600	1 800	+390	+240	–	–	–	–	–	–	+212	+120	+270	+120	+350	+120	+124	+32	+182	+32	+92	0
1 800	2 000																				

Unit μm

Diameter division mm over	incl.	K6 high	K6 low	K7 high	K7 low	M6 high	M6 low	M7 high	M7 low	N6 high	N6 low	N7 high	N7 low	P6 high	P6 low	P7 high	P7 low	R6 high	R6 low	R7 high	R7 low
3	6	+2	− 6	+ 3	− 9	− 1	− 9	0	− 12	− 5	− 13	− 4	− 16	− 9	− 17	− 8	− 20	− 12	− 20	− 11	− 23
6	10	+2	− 7	+ 5	− 10	− 3	− 12	0	− 15	− 7	− 16	− 4	− 19	− 12	− 21	− 9	− 24	− 16	− 25	− 13	− 28
10	18	+2	− 9	+ 6	− 12	− 4	− 15	0	− 18	− 9	− 20	− 5	− 23	− 15	− 26	− 11	− 29	− 20	− 31	− 16	− 34
18	30	+2	−11	+ 6	− 15	− 4	− 17	0	− 21	−11	− 24	− 7	− 28	− 18	− 31	− 14	− 35	− 24	− 37	− 20	− 41
30	40	+3	−13	+ 7	− 18	− 4	− 20	0	− 25	−12	− 28	− 8	− 33	− 21	− 37	− 17	− 42	− 29	− 42	− 25	− 50
40	50																				
50	65	+4	−15	+ 9	− 21	− 5	− 24	0	− 30	−14	− 33	− 9	− 39	− 26	− 45	− 21	− 51	− 35	− 54	− 30	− 60
65	80																	− 37	− 56	− 32	− 62
80	100	+4	−18	+10	− 25	− 6	− 28	0	− 35	−16	− 38	−10	− 45	− 30	− 52	− 24	− 59	− 44	− 66	− 38	− 73
100	120																	− 47	− 69	− 41	− 76
120	140	+4	−21	+12	− 28	− 8	− 33	0	− 40	−20	− 45	− 12	− 52	− 36	− 61	− 28	− 68	− 56	− 81	− 48	− 88
140	160																	− 58	− 83	− 50	− 90
160	180																	− 61	− 86	− 53	− 93
180	200	+5	−24	+13	− 33	− 8	− 37	0	− 46	−22	− 51	−14	− 60	− 41	− 70	− 33	− 79	− 68	− 97	− 60	−106
200	225																	− 71	−100	− 63	−109
225	250																	− 75	−104	− 67	−113
250	280	+5	−27	+16	− 36	− 9	− 41	0	− 52	−25	− 57	−14	− 66	− 47	− 79	− 36	− 88	− 85	−117	− 74	−126
280	315																	− 89	−121	− 78	−130
315	355	+7	−29	+17	− 40	−10	− 46	0	− 57	−26	− 62	−16	− 73	− 51	− 87	− 41	− 98	− 97	−133	− 87	−144
355	400																	−103	−139	− 93	−150
400	450	+8	−32	+18	− 45	−10	− 50	0	− 63	−27	− 67	−17	− 80	− 55	− 95	− 45	−108	−113	−153	−103	−166
450	500																	−119	−159	−109	−172
500	560	0	−44	0	− 70	−26	− 70	−26	− 96	−44	− 88	−44	−114	− 78	−122	− 78	−148	−150	−194	−150	−220
560	630																	−155	−199	−155	−225
630	710	0	−50	0	− 80	−30	− 80	−30	−100	−50	−100	−50	−130	− 88	−138	− 88	−168	−175	−225	−175	−225
710	800																	−185	−235	−185	−265
800	900	0	−56	0	− 90	−34	− 90	−34	− 124	−56	−112	−56	−146	−100	−156	−100	−190	−210	−266	−210	−300
900	1 000																	−220	−276	−220	−310
1 000	1 120	0	−66	0	−105	−40	−106	−40	−145	−66	−132	−66	−171	−120	−186	−120	−225	−250	−316	−250	−355
1 120	1 250																	−260	−326	−260	−365
1 250	1 400	0	−78	0	−125	−48	−126	−48	−173	−78	−156	−78	−203	−140	−213	−140	−265	−300	−378	−300	−425
1 400	1 600																	−330	−408	−330	−455
1 600	1 800	0	−92	0	−150	−58	−150	−58	−208	−92	−184	−92	−242	−170	−262	−170	−320	−370	−462	−370	−520
1 800	2 000																	−400	−492	−400	−550

Unit μm

H7		H8		H9		H10		H11		H13		J6		Js6		J7		Js7		K5		Diameter division mm	
high	low	high	low	high	low	high	low	high	low	high	low	high	low	high	low	high	low	high	low	high	low	over	incl.
+ 12	0	+ 18	0	+ 30	0	+ 48	0	+ 75	0	+180	0	+ 5	−3	+ 4	− 4	+ 6	− 6	+ 6	− 6	0	− 5	3	6
+ 15	0	+ 22	0	+ 36	0	+ 58	0	+ 90	0	+220	0	+ 5	−4	+ 4.5	− 4.5	+ 8	− 7	+ 7.5	− 7.5	+1	− 5	6	10
+ 18	0	+ 27	0	+ 43	0	+ 70	0	+110	0	+270	0	+ 6	−5	+ 5.5	− 5.5	+10	− 8	+ 9	− 9	+2	− 6	10	18
+ 21	0	+ 33	0	+ 52	0	+ 84	0	+130	0	+330	0	+ 8	−5	+ 6.5	− 6.5	+12	− 9	+10.5	−10.5	+1	− 8	18	30
+ 25	0	+ 39	0	+ 62	0	+100	0	+160	0	+390	0	+10	−6	+ 8	− 8	+14	−11	+12.5	−12.5	+2	− 9	30 40	40 50
+ 30	0	+ 46	0	+ 74	0	+120	0	+190	0	+460	0	+13	−6	+ 9.5	− 9.5	+18	−12	+15	−15	+3	−10	50 65	65 80
+ 35	0	+ 54	0	+ 87	0	+140	0	+220	0	+540	0	+16	−6	+11	−11	+22	−13	+17.5	−17.5	+2	−13	80 100	100 120
+ 40	0	+ 63	0	+100	0	+160	0	+250	0	+630	0	+18	−7	+12.5	−12.5	+26	−14	+20	−20	+3	−15	120 140 160	140 160 180
+ 46	0	+ 72	0	+115	0	+185	0	+290	0	+720	0	+22	−7	+14.5	−14.5	+30	−16	+23	−23	+2	−18	180 200 225	200 225 250
+ 52	0	+ 81	0	+130	0	+210	0	+320	0	+810	0	+25	−7	+16	−16	+36	−16	+26	−26	+3	−20	250 280	280 315
+ 57	0	+ 89	0	+140	0	+230	0	+360	0	+890	0	+29	−7	+18	−18	+39	−18	+28.5	−28.5	+3	−22	315 355	355 400
+ 63	0	+ 97	0	+155	0	+250	0	+400	0	+970	0	+33	−7	+20	−20	+43	−20	+31.5	−31.5	+2	−25	400 450	450 500
+ 70	0	+110	0	+175	0	+280	0	+440	0	−	0	−	−	+22	−22	−	−	+35	−35	−	−	500 560	560 630
+ 80	0	+125	0	+200	0	+320	0	+500	0	−	0	−	−	+25	−25	−	−	+40	−40	−	−	630 710	710 800
+ 90	0	+140	0	+230	0	+360	0	+560	0	−	0	−	−	+28	−28	−	−	+45	−45	−	−	800 900	900 1 000
+105	0	+165	0	+260	0	+420	0	+660	0	−	0	−	−	+33	−33	−	−	+52.5	−52.5	−	−	1 000 1 120	1 120 1 250
+125	0	+195	0	+310	0	+500	0	+780	0	−	0	−	−	+39	−39	−	−	+62.5	−62.5	−	−	1 250 1 400	1 400 1 600
+150	0	+230	0	+370	0	+600	0	+920	0	−	0	−	−	+46	−46	−	−	+75	−75	−	−	1 600 1 800	1 800 2 000

Appendix table 7: Basic tolerance

Unit μm

Diameter division mm		IT basic tolerance class									
over	incl.	IT1	IT2	IT3	IT4	IT5	IT6	IT7	IT8	IT9	IT10
—	3	0.8	1.2	2	3	4	6	10	14	25	40
3	6	1	1.5	2.5	4	5	8	12	18	30	48
6	10	1	1.5	2.5	4	6	9	15	22	36	58
10	18	1.2	2	3	5	8	11	18	27	43	70
18	30	1.5	2.5	4	6	9	13	21	33	52	84
30	50	1.5	2.5	4	7	11	16	25	39	62	100
50	80	2	3	5	8	13	19	30	46	74	120
80	120	2.5	4	6	10	15	22	35	54	87	140
120	180	3.5	5	8	12	18	25	40	63	100	160
180	250	4.5	7	10	14	20	29	46	72	115	185
250	315	6	8	12	16	23	32	52	81	130	210
315	400	7	9	13	18	25	36	57	89	140	230
400	500	8	10	15	20	27	40	63	97	155	250
500	630	9	11	16	22	30	44	70	110	175	280
630	800	10	13	18	25	35	50	80	125	200	320
800	1 000	11	15	21	29	40	56	90	140	230	360
1 000	1 250	13	18	24	34	46	66	105	165	260	420
1 250	1 600	15	21	29	40	54	78	125	195	310	500
1 600	2 000	18	25	35	48	65	92	150	230	370	600
2 000	2 500	22	30	41	57	77	110	175	280	440	700
2 500	3 150	26	36	50	69	93	135	210	330	540	860

Appendix table 8: Viscosity conversion table

Kinematic viscosity mm^2/s	Saybolt SUS (second)	Redwood R"(second)	Engler E (degree)
2.7	35	32.2	1.18
4.3	40	36.2	1.32
5.9	45	40.6	1.46
7.4	50	44.9	1.60
8.9	55	49.1	1.75
10.4	60	53.5	1.88
11.8	65	57.9	2.02
13.1	70	62.3	2.15
14.5	75	67.6	2.31
15.8	80	71.0	2.42
17.0	85	75.1	2.55
18.2	90	79.6	2.68
19.4	95	84.2	2.81
20.6	100	88.4	2.95
23.0	110	97.1	3.21
25.0	120	105.9	3.49
27.5	130	114.8	3.77
29.8	140	123.6	4.04
32.1	150	132.4	4.32
34.3	160	141.1	4.59
36.5	170	150.0	4.88
38.8	180	158.8	5.15
41.0	190	167.5	5.44
43.2	200	176.4	5.72
47.5	220	194.0	6.28
51.9	240	212	6.85
56.5	260	229	7.38
60.5	280	247	7.95
64.9	300	265	8.51
70.3	325	287	9.24
75.8	350	309	9.95
81.2	375	331	10.7
86.8	400	353	11.4
92.0	425	375	12.1
97.4	450	397	12.8

Kinematic viscosity mm^2/s	Saybolt SUS (second)	Redwood R"(second)	Engler E (degree)
103	475	419	13.5
108	500	441	14.2
119	550	485	15.6
130	600	529	17.0
141	650	573	18.5
152	700	617	19.9
163	750	661	21.3
173	800	705	22.7
184	850	749	24.2
195	900	793	25.6
206	950	837	27.0
217	1 000	882	28.4
260	1 200	1 058	34.1
302	1 400	1 234	39.8
347	1 600	1 411	45.5
390	1 800	1 587	51
433	2 000	1 763	57
542	2 500	2 204	71
650	3 000	2 646	85
758	3 500	3 087	99
867	4 000	3 526	114
974	4 500	3 967	128
1 082	5 000	4 408	142
1 150	5 500	4 849	156
1 300	6 000	5 290	170
1 400	6 500	5 730	185
1 510	7 000	6 171	199
1 630	7 500	6 612	213
1 740	8 000	7 053	227
1 850	8 500	7 494	242
1 960	9 000	7 934	256
2 070	9 500	8 375	270
2 200	10 000	8 816	284

Appendix table 9: Kgf to N conversion table

kgf		N	kgf		N	kgf		N
0.1020	**1**	9.8066	3.4670	**34**	333.43	6.8321	**67**	657.04
0.2039	**2**	19.613	3.5690	**35**	343.23	6.9341	**68**	666.85
0.3059	**3**	29.420	3.6710	**36**	353.04	7.0361	**69**	676.66
0.4079	**4**	39.227	3.7730	**37**	362.85	7.1380	**70**	686.46
0.5099	**5**	49.033	3.8749	**38**	372.65	7.2400	**71**	696.27
0.6118	**6**	58.840	3.9769	**39**	382.46	7.3420	**72**	706.08
0.7138	**7**	68.646	4.0789	**40**	392.27	7.4440	**73**	715.88
0.8158	**8**	78.453	4.1808	**41**	402.07	7.5459	**74**	725.69
0.9177	**9**	88.260	4.2828	**42**	411.88	7.6479	**75**	735.50
1.0197	**10**	98.066	4.3848	**43**	421.68	7.7499	**76**	745.30
1.1217	**11**	107.87	4.4868	**44**	431.49	7.8518	**77**	755.11
1.2237	**12**	117.68	4.5887	**45**	441.30	7.9538	**78**	764.92
1.3256	**13**	127.49	4.6907	**46**	451.10	8.0558	**79**	774.72
1.4276	**14**	137.29	4.7927	**47**	460.91	8.1578	**80**	784.53
1.5296	**15**	147.10	4.8946	**48**	470.72	8.2597	**81**	794.34
1.6316	**16**	156.91	4.9966	**49**	480.52	8.3617	**82**	804.14
1.7335	**17**	166.71	5.0986	**50**	490.33	8.4637	**83**	813.95
1.8355	**18**	176.52	5.2006	**51**	500.14	8.5656	**84**	823.76
1.9375	**19**	186.33	5.3025	**52**	509.94	8.6676	**85**	833.56
2.0394	**20**	196.13	5.4045	**53**	519.75	8.7696	**86**	843.37
2.1414	**21**	205.94	5.5065	**54**	529.56	8.8716	**87**	853.18
2.2434	**22**	215.75	5.6085	**55**	539.36	8.9735	**88**	862.98
2.3454	**23**	225.55	5.7104	**56**	549.17	9.0755	**89**	872.79
2.4473	**24**	235.36	5.8124	**57**	558.98	9.1775	**90**	882.60
2.5493	**25**	245.17	5.9144	**58**	568.78	9.2794	**91**	892.40
2.6513	**26**	254.97	6.0163	**59**	578.59	9.3814	**92**	902.21
2.7532	**27**	264.78	6.1183	**60**	588.40	9.4834	**93**	912.02
2.8552	**28**	274.59	6.2203	**61**	598.20	9.5854	**94**	921.82
2.9572	**29**	284.39	6.3223	**62**	608.01	9.6873	**95**	931.63
3.0592	**30**	294.20	6.4242	**63**	617.82	9.7893	**96**	941.44
3.1611	**31**	304.01	6.5262	**64**	627.62	9.8913	**97**	951.24
3.2631	**32**	313.81	6.6282	**65**	637.43	9.9932	**98**	961.05
3.3651	**33**	323.62	6.7302	**66**	647.24	10.0952	**99**	970.86

〔How to read the table〕 If for example you want to convert 10 kgf to N, find "10" in the middle column of the first set of columns on the right. Look in the N column directly to the right of "10," and you will see that 10 kgf equals 98.066 N. Oppositely, to convert 10 N to kgf, look in the kgf column to the right of "10" and you will see that 10 N equals 1.0197 kgf.

1kgf＝9.80665N
1N＝0.101972kgf

Appendix table 10: Inch-millimetre conversion table

inch		0"	1"	2"	3"	4"	5"	6"	7"	8"	9"
fraction	decimal										
			25.400	50.800	76.200	101.600	127.000	152.400	177.800	203.200	228.600
1/64	0.015625	0.397	25.797	51.197	76.597	101.997	127.397	152.797	178.197	203.597	228.997
1/32	0.031250	0.794	26.194	51.594	76.994	102.394	127.794	153.194	178.594	203.994	229.394
3/64	0.046875	1.191	26.591	51.991	77.391	102.791	128.191	153.591	178.991	204.391	229.791
1/16	0.062500	1.588	26.988	52.388	77.788	103.188	128.588	153.988	179.388	204.788	230.188
5/64	0.078125	1.984	27.384	52.784	78.184	103.584	128.984	154.384	179.784	205.184	230.584
3/32	0.093750	2.381	27.781	53.181	48.581	103.981	129.381	154.781	180.181	205.581	230.981
7/64	0.109375	2.778	28.178	53.578	78.978	104.378	129.778	155.178	180.578	205.978	231.378
1/ 8	0.125000	3.175	28.575	53.975	79.375	104.775	130.175	155.575	180.975	206.375	231.775
9/64	0.140625	3.572	28.972	54.372	79.772	105.172	130.572	155.972	181.372	206.772	232.172
5/32	0.156250	3.969	29.369	54.769	80.169	105.569	130.969	156.369	181.769	207.169	232.569
11/64	0.171875	4.366	29.766	55.166	80.566	105.966	131.366	156.766	182.166	207.566	232.966
3/16	0.187500	4.762	30.162	55.562	80.962	106.362	131.762	157.162	182.562	207.962	233.362
13/64	0.203125	5.159	30.559	55.959	81.359	106.759	132.159	157.559	182.959	208.359	233.759
7/32	0.218750	5.556	30.956	56.356	81.756	107.156	132.556	157.956	183.356	208.756	234.156
15/64	0.234375	5.953	31.353	56.753	82.153	107.553	132.953	158.353	183.753	209.153	234.553
1/ 4	0.250000	6.350	31.750	57.150	82.550	107.950	133.350	158.750	184.150	209.550	234.950
17/64	0.265625	6.747	32.147	57.547	82.947	108.347	133.747	159.147	184.547	209.947	235.347
9/32	0.281250	7.144	32.544	57.944	83.344	108.744	134.144	159.544	184.944	210.344	235.744
19/64	0.296875	7.541	32.941	58.341	83.741	109.141	134.541	159.941	185.341	210.741	236.141
5/16	0.312500	7.938	33.338	58.738	84.138	109.538	134.938	160.338	185.738	211.138	236.538
21/64	0.328125	8.334	33.734	59.134	84.534	109.934	135.334	160.734	186.134	211.534	236.934
11/32	0.343750	8.731	34.131	59.531	84.931	110.331	135.731	161.131	186.531	211.931	237.331
23/64	0.359375	9.128	34.528	59.928	85.328	110.728	136.128	161.528	186.928	212.328	237.728
3/ 8	0.375000	9.525	34.925	60.325	85.725	111.125	136.525	161.925	187.325	212.725	238.125
25/64	0.390625	9.922	35.322	60.722	86.122	111.522	136.922	162.322	187.722	213.122	238.522
13/32	0.406250	10.319	35.719	61.119	86.519	111.919	137.319	162.719	188.119	213.519	238.919
27/64	0.421875	10.716	36.116	61.516	86.916	112.316	137.716	163.116	188.516	213.916	239.316
7/16	0.437500	11.112	36.512	61.912	87.312	112.721	138.112	163.512	188.912	214.312	239.712
29/64	0.453125	11.509	36.909	62.309	87.709	113.109	138.509	163.909	189.309	214.709	240.109
15/32	0.468750	11.906	37.306	62.706	88.106	113.506	138.906	164.306	189.706	215.106	240.506
31/64	0.484375	12.303	37.703	63.103	88.503	113.903	139.303	164.703	190.103	215.503	240.903
1/ 2	0.500000	12.700	38.100	63.500	88.900	114.300	139.700	165.100	190.500	215.900	241.300
33/64	0.515625	13.097	38.497	63.897	89.297	114.697	140.097	165.497	190.897	216.297	241.697
17/32	0.531250	13.494	38.894	64.294	89.694	115.094	140.494	165.894	191.294	216.694	242.094
35/64	0.546875	13.891	39.291	64.691	90.091	115.491	140.891	166.291	191.691	217.091	242.491
9/16	0.562500	14.288	39.688	65.088	90.488	115.888	141.283	166.688	192.088	217.488	242.888
37/64	0.578125	14.684	40.084	65.484	90.884	116.284	141.684	167.084	192.484	217.884	243.284
19/32	0.593750	15.081	40.481	65.881	91.281	116.681	142.081	167.481	192.881	218.281	243.681
39/64	0.609375	15.478	40.878	66.278	91.678	117.078	142.478	167.878	193.278	218.678	244.078
5/ 8	0.625000	15.875	41.275	66.675	92.075	117.475	142.875	168.275	193.675	219.075	244.475
41/64	0.640625	16.272	41.672	67.072	92.472	117.872	143.272	168.672	194.072	219.472	244.872
21/32	0.656250	16.669	42.069	67.469	92.869	118.269	143.669	169.069	194.469	219.869	245.269
43/64	0.671875	17.066	42.466	67.866	93.266	118.666	144.066	169.466	194.866	220.266	245.666
11/16	0.687500	17.462	42.862	68.262	93.662	119.062	144.462	169.862	195.262	220.662	246.062
45/64	0.703125	17.859	43.259	68.659	94.059	119.459	144.859	170.259	195.659	221.056	246.459
23/32	0.718750	18.256	43.656	69.056	94.456	119.856	145.256	170.656	196.056	221.456	246.856
47/64	0.734375	18.653	44.053	69.453	94.853	120.253	145.653	171.053	196.453	221.853	247.253
3/ 4	0.750000	19.050	44.450	69.850	95.250	120.650	146.050	171.450	196.850	222.250	247.650
49/64	0.765625	19.447	44.847	70.247	95.647	121.047	146.447	171.847	197.247	222.647	248.047
25/32	0.781250	19.844	45.244	70.644	96.044	121.444	146.844	172.244	197.644	223.044	248.444
51/64	0.796875	20.241	45.641	71.041	96.441	121.841	147.241	172.641	198.041	223.441	248.841
13/16	0.812500	20.638	46.038	71.438	96.838	122.238	147.638	173.038	198.438	223.838	249.238
53/64	0.828125	21.034	46.434	71.834	97.234	122.634	148.034	173.434	198.834	224.234	249.634
27/32	0.843750	21.431	46.831	72.231	97.631	123.031	148.431	173.831	199.231	224.631	250.031
55/64	0.859375	21.828	47.228	72.628	98.028	123.428	148.828	174.228	199.628	225.028	250.428
7/ 8	0.875000	22.225	47.625	73.025	98.425	123.825	149.225	174.625	200.025	225.425	250.825
57/64	0.890625	22.622	48.022	73.422	98.822	124.222	149.622	175.022	200.422	225.822	251.222
39/32	0.906250	23.019	48.419	73.819	99.219	124.619	150.019	175.419	200.819	226.219	251.619
59/64	0.921875	23.416	48.816	74.216	99.616	125.016	150.416	175.816	201.216	226.616	252.016
15/16	0.937500	23.812	49.212	74.612	100.012	125.412	150.812	176.212	201.612	227.012	252.412
61/64	0.953125	24.209	49.609	75.009	100.409	125.809	151.209	176.609	202.009	227.409	252.809
31/32	0.968750	24.606	50.006	75406	100.806	126.206	151.606	177.006	202.406	227.806	253.206
63/64	0.984375	25.003	50.403	75.803	101.203	126.603	152.003	177.403	202.803	228.203	253.603